PDC-X Digital Tachometer

The PDC-X digital tachometer/hour meter offers a wide range of possibilities for RPM based control solutions. From standard tachometer/ hour meter functionality to reading J1939 traffic directly from the engine. Operating on 9 to 36 VDC these units can fit into most applications. The combination of a custom connection harness and an easy to use Deutsch connector allow an operator to be set up and running within a matter of minutes.

The PDC-X also has the ability to monitor J1939 traffic. This unit combines the traditional functionality of a Tach/Hour Meter along with the ability to display engine parameters such as:

- Engine Speed
- Water temperature
- Oil pressure
- Battery voltage
- Fuel Rate
- Percent Load
- Boost Pressure
- True engine hours
- All active engine faults

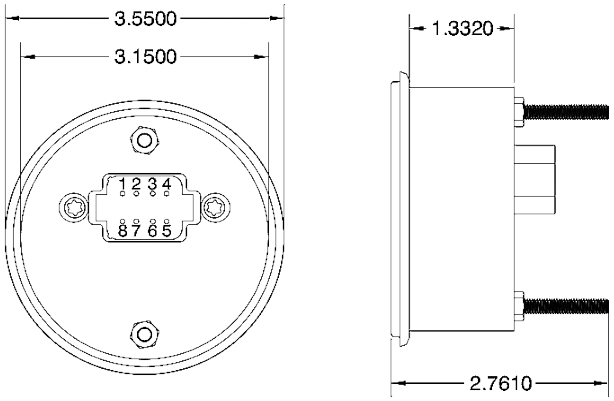

GENERAL SPECIFICATIONS	
Engine Compatibility	Mechanical Gas or Diesel
	Gas or Diesel with J1939 CAN Bus
Tachometer Range	0 9999 RPM
Tachometer Accuracy	± 10 RPM
Display Readout Type	Four fully active LCD Digits
Character Height	Approximately ¼" – ½"
Input Voltage	9-36 VDC
Outputs	7.5A Max per output
Connector	8-pin Deutsch "B" Key
Housing Construction	Passivated aluminium, non-magnetic
Face Plate	Acrylic
Humidity Vent	Gortex
Bezel	Black Anodized Aluminium
Mounting Bracket	Steel
Trim Ring	Plastic (optional)
LED Feedback	CAN Bus Warning
	Output #1 Active
	Output #2 Active
	CAN Bus Error Shutdown
Lockable Settings	OEM Only

ENVIRONMENTAL SPECIFICATIONS	
Operating Temp.	-10° to 80° C (14° to 176° F)
Storage Temp.	-55° to 82° C (-67° to 180° F)
Water Resistance	IP-68–30 minute submersion at 1 meter

Applications

- Chippers
- Rock Crushers
- Conveyors

800-569-9801 • info@evolutionmotion.com
evolutionmotion.com/products/pdc-x-digital-tachometer