Evolution MOTION SOLUTIONS

MOBILE CONTROLS

LDA-Rx Receiver

The LDA-Rx Series Receiver features 16 discrete solid state outputs (8 of which can be configured as analog PWM outputs), LED feed back and a J1939 CAN (Controller Area Network) connection. With internal processing capabilities, these robust industrial remote control receivers can be programmed to fit any application.

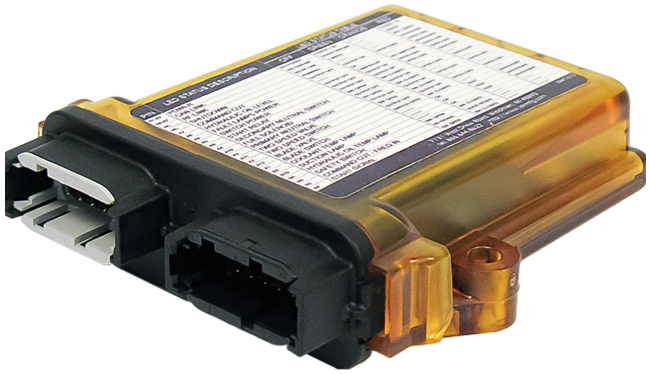

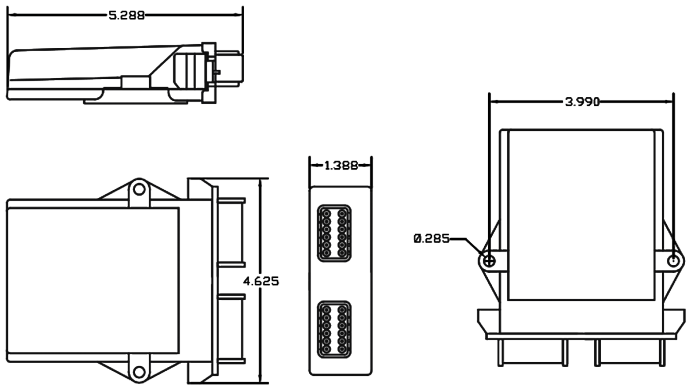

Options

- LDA-Tx Series
- LHT Series

Applications

- Machine Control
- Hydraulic Systems Control

RECEIVER SPECIFICATIONS	
Supply Voltage	9-36 VDC
Digital Channel Outputs	16 Solid State; (8 configurable as analog outputs
Analog Channel Outputs	8 PWM (Pulse Width Modulation)
Output Ratings	5 Amps (Internally Limited)
Output Diagnostics	LED feed back to indicate Open Load and Over Load conditions
CAN Connection	J1939 (2-wire)
Antenna	Internal/External
Dimensions	Approx. 4.75" x 4" x 1"
Weight	Approx. 8 oz.
Enclosure	IP 67

2.4 GHZ GENERAL SPECIFICATIONS	
Frequency Range	ISM 2.4 GHz
Frequency Control	42 Frequency Hopping Channels (Software Selectable)
Modulation	MSK
Security	Channelization, System ID, and Vendor ID
Humidity	Up to 90% RH, non-condensing
Operating Temp.	-40C to 85C (-40F to 185F)

900 MHZ GENERAL SPECIFICATIONS	
Frequency Range	ISM 900 MHz
Frequency Control	7 Frequency Hopping Channels (Software Selectable)
Modulation	DSSS (Direct Sequence Spread Spectrum)
Error Correction	Automatic Error Detection and Automatic Retransmission
Humidity	Up to 90% RH, non-condensing
Operating Temp.	-40C to 85C (-40F to 185F)

800-569-9801 • info@evolutionmotion.com
evolutionmotion.com/products/lda-rx-receiver