Apollo Mini Kit

Model # MINI20 | MINI30 | MINI40

The Apollo Mini Kit is best suited for simple applications where minimal directional control is required such as: roll-off trailers, boat lifts, wreckers, gates/doors, and winches. This compact system offers a palm sized, IP65 transmitter with either two, three, or four functions. The IP67 receiver is weather proof and available in AC or DC voltage. The 30-meter range is enough to keep operators at a safe distance but still highly productive.

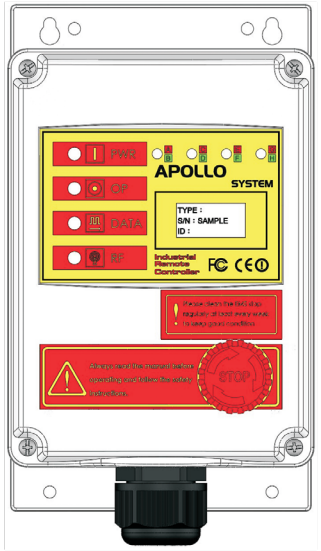

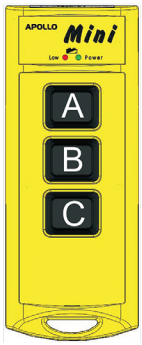

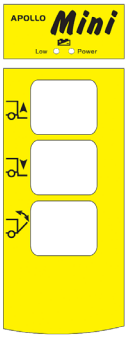

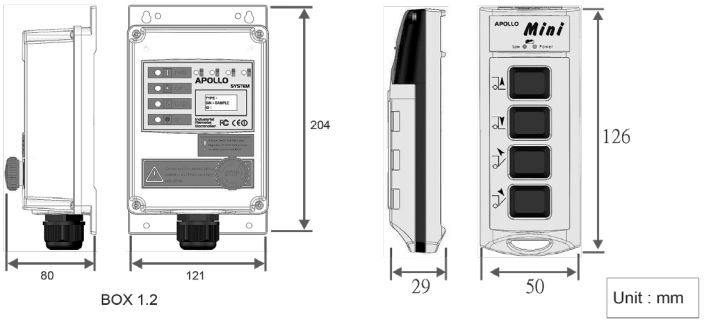

Options

- Transmitter: MINI20 or MINI30 or MINI40
- Receiver: AC or DC Power Receiver

Applications

- Crane Control
- Hoist Control
- Tow Truck/Wrecker Control

GENERAL SPECIFICATIONS	
Operating Range	30 m Line of sight
Functions	2–4
Frequency	FM 433 MHz
Ingress Protection	IP65
Rx Source Voltage	12–24 VDC
Protection	Short Protection
Operating Temp.	0°–70° C (32°–158° F)

TRANSMITTER SPECIFICATIONS	
Operating Range	30 M. Line of sight
Operating Frequency	429 MHz
Response Time	100 ms
Output Power	< 10 mW
Power Supply	1.5 V (2 AA Alkaline Batteries)
Material	Industrial ABS PC
Address Codes	256
Antenna	Internal
Dimensions	124 × 48 × 25mm
Weight	95 g (Excluding Batteries)
Ingress Protection	IP 65
Operating Temp.	0°– +70° C (32°–158° F)

RECEIVER SPECIFICATIONS	
Frequency	429 MHz
RF Sensitivity	-110 dBm
Power Supply	12– 24VDC
Address Codes	256
Power Consumption	<12W
Antenna	Internal
Weight	270 g (Excluding Cable)
Ingress Protection	IP 65
Operating Temp.	–10°– +75° C (14°–167° F)

800-569-9801 • info@evolutionmotion.com
evolutionmotion.com/products/apollo-mini-kit