CUPID RADIO REMOTE CONTROL

HANDBOOK

FCC ID:PCSCUPID06062006



Q100/Q200

Please read the handbook carefully before operation to avoid any dangerous or damage may be incurred

Jan. 2015

TABLE Of CONTENTS

1. Introduction 2

1.1 Features 2

2. Models.....2

3. Transmitter 2
- 3.1 Technical data. 2
- 3.2 Indicator 3
- 3.3 Power on steps 3
- 3.4 Power off steps 3

4. Receiver 3
- 4.1 Technical data. 3
- 4.2 Indicator 4
- 4.3 Installation notes 4
- 4.4 Receiver installation illustration.....5

5. User reminder 5

6. Trouble shooting-TX.....6

7. Trouble shooting-RX 6

8. Parts list 7

9.Wiriing diagram 7

10. Warranty.....16

Note: The device complies with part 15 of FCC Rules. Operation is subject to the following two conditions:
(1)This device may not cause harmful interference , and
(2)This device must not accept any interference received, including interference that may cause undesired operation.
The FCC require the user to be notified that any changes or modifications made to this device thatare not expressly approved by 3e may avoid the user's authority to operate the equipment.

To comply with FCC RF exposure requirement, this device and its antenna must no be co-located or operating in conjunction with any other antenna or transmitter.

CUPID .....
Makes control easier !!

1. INTRODUCTION

1.1 FEATURES:

1. Advance program design, quick & good performance on movements.
2. PA transmitter housing, water/shock/dust proof.
3. Single-raw button transmitter, compact and lighter design, ensure safe & convenient operation.
4. Security code have 256 sets.
5. Receiver with 4-LED, quick, simple judgement for operation status & after services.

2. MODELS

CUPID Q100	1 step, (6) buttons + (1) AUX button (momentary)
CUPID Q100S	1 step, (6) buttons + (1) light button (toggle/latch)
CUPID Q100AB	1 step, (6) buttons + (1) button for A, B , A+B hoist
CUPID Q211	(2) 2 step-button + (4) 1 step- button + (1) AUX button (momentary)
CUPID Q200	2 steps, (6) 2 step-button + (1) AUX button(momentary)
CUPID Q200S	2 steps, (6) 2 step-button + (1) light button (toggle/latch)
CUPID Q200AB	2 steps, (6) 2 step-button + (1) button for A, B , A+B hoist

※ All models are equipped with EMS stop and power switch

3. TRANSMITTER

3.1 TECHNICAL DATA:

Operation distance: 100M(level and open space)
Frequenc : 418Mhz (40CH) or
433Mhz (20CH) or
868Mhz (20CH)
Output power :< 10mW
Antenna: internal type
Temperature: 0°C~+75°C
(no battery inside)
Power supply:1.5V(AA)*4pcs
Enclosure:IP65
Consumption: <17mA (stand-by : <20mA)
Security code : 256 sets
Weight : 235 g (excluding batteries)

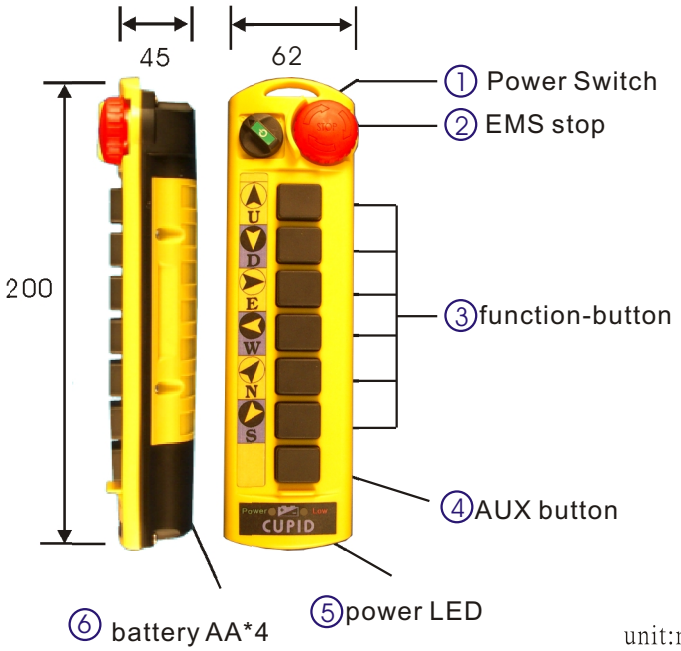

unit:mm

3.2 INDICATOR:

stand-by (power on)	RED/GREEN both indicators are NOT lighting (EMS ON)
operation	GREEN indicator light blinking
power low	RED indicator light blinking
power off	Indicator lights off (EMS OFF)
AUX button- A, B, A+B (only for Q100AB & Q200AB)	press AUX button once, LED A remains -hoist A available press again, LED B remains - hoist B available press again, LED A/B both remains - A/B hoist both available press again, LED A/B off ***NOTE**: when AUX button pressed , if no operation for about 5 sec., then LED will be off automatically, once any button is pressed, the AUX LED will be lighted again automatically*

3.3 POWER-ON STEPS:

(1) Power on receiver.
(2) Switch the ' power switch ' to ON, and turn on the mushroom.
(3) Press any button and release, now CUPID is ready to operate (now receiver power LED lights GREEN)

3.4 POWER-OFF STEPS :

(1) Push down the mushroom .
(2) Switch off transmitter power to cut off the power.

4. RECEIVER

4.1 TECHNICAL DATA:

Sensitivity of RF:-120dBm
Frequency :418Mhz (40CH) or
433Mhz (20CH) or
868Mhz (20CH)
Antenna : internal type
Operation Temperature :
-10°C~+75°C
Source Voltage:
AC36V-AC48V
AC85V-AC265V
50/60Hz
Enclosure:IP67
Consumption:<12W
Security Code:256 sets
Weight:700 g (excluding cable)

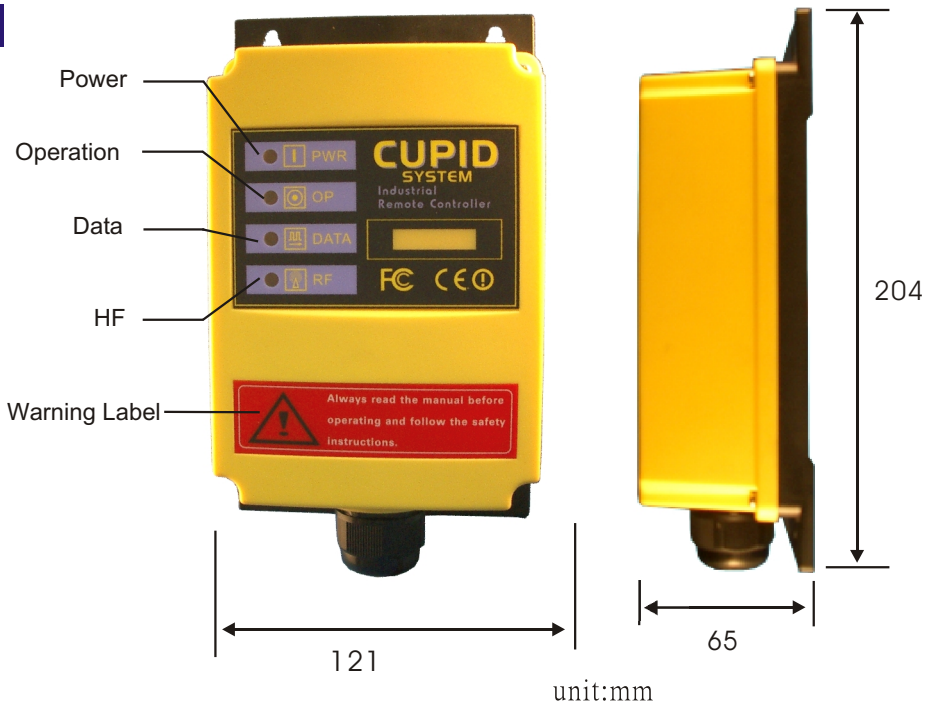

4.2 INDICATOR:

lillustration	description
PWR	Power LIGHT Green lights when power on
OP	Operation LIGHT GREEN lighting when power on then start-up Light OFF when EMS stop pressed
DATA	Data LIGHT RED lighting when TX* is pressed (in operation), Light OFF when button released (without operation)
RF	Frequency LIGHT RED light blinking when power on RED lighting when TX pressed (in operation) RED light blinking when button released (without operation)

TX*: transmitter

4.3 INSTALLATION NOTES:

(1) Ensure the original wired control of crane works.

(2) Shut down crane main power source before installation.

(3) Mount in a firmed site where the receiver can be seen easily by operator.

(4) Keep away the mounted site from motors relays, cables, high voltage wiring and devices, or the protrusion of building where crane moves.
Select a firmed site without metal shield.

(5) Do not install the other same channel remote controller within 50M

(6) Ensure the wiring layout correctly and safely

(7) Test each function to be sure each output has the same function as wired control

(8) Put the wired pendant in safe position

Dimension of receiver

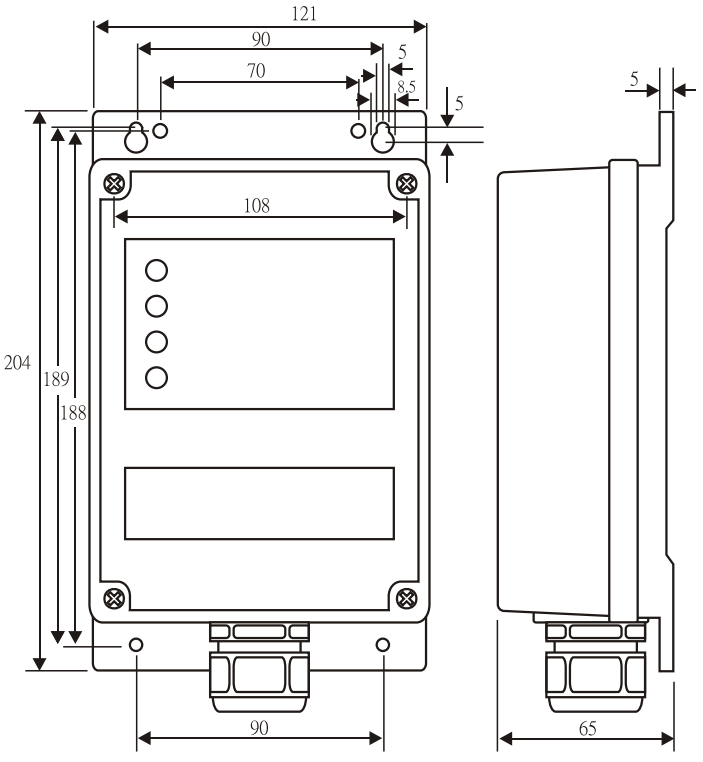

(Box 1.1)

4.4 RECEIVER INSTALLATION ILLUSTRATION :

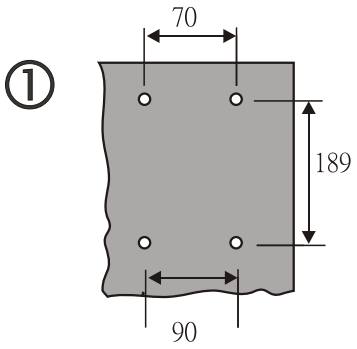

hole 8mm dia x 4

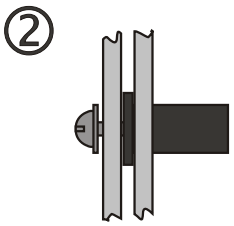

insert rubber absorber in position

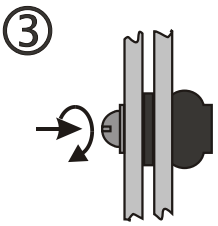

screwing in until rubber absorber inflated

5. USER REMINDER

1. Please be aware that only operator with well trained in order to use the unit to avoid any damage or dangerous incurred by un-proper operation.

2. Even you have known well the radio remote control, we may insist you to read the manual carefully before operation.

3. Please do regular check for remote control with long life.

4. Please ensure that battery is sufficient before use, or please renew . Please take the batteries out if no operation for long time.

5. DO NOT CHANGE or EXCHANGE THE SPARE PARTS WITHOUT AUTHORIZATION AS THIS VOID THE WARRANTY. Please call your distributor or authorized engineer if a repair service is requested

.

If an interference or sunder incurred, please stop operation and contact with your distributor IMMD.

6. TROUBLE SHOOTING- TX

Please make sure the following status before trouble shooting.
(1) The hoist or device is subject to control works
(2) The TX outlook is in good condition without leakage
(3) Receiver works

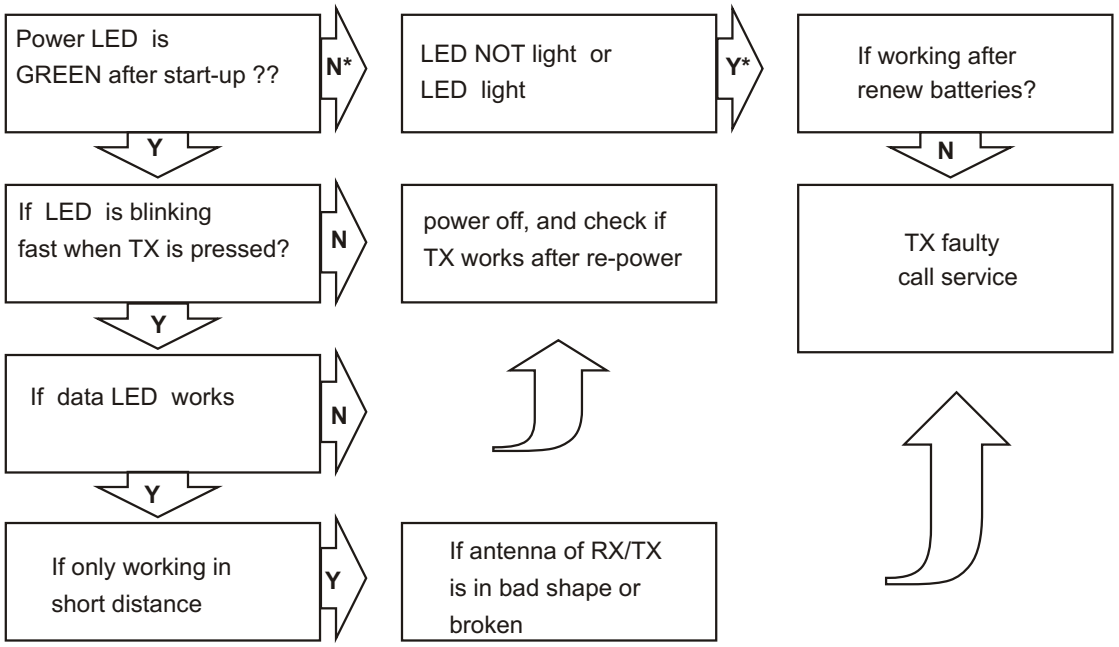

TX*: transmitter

7. TROUBLE SHOOTING- RX

Please make sure the following status before trouble shooting.
(1) The hoist or device is subject to control works
(2) The RX outlook is in good condition without leakage
(3) Transmitter works

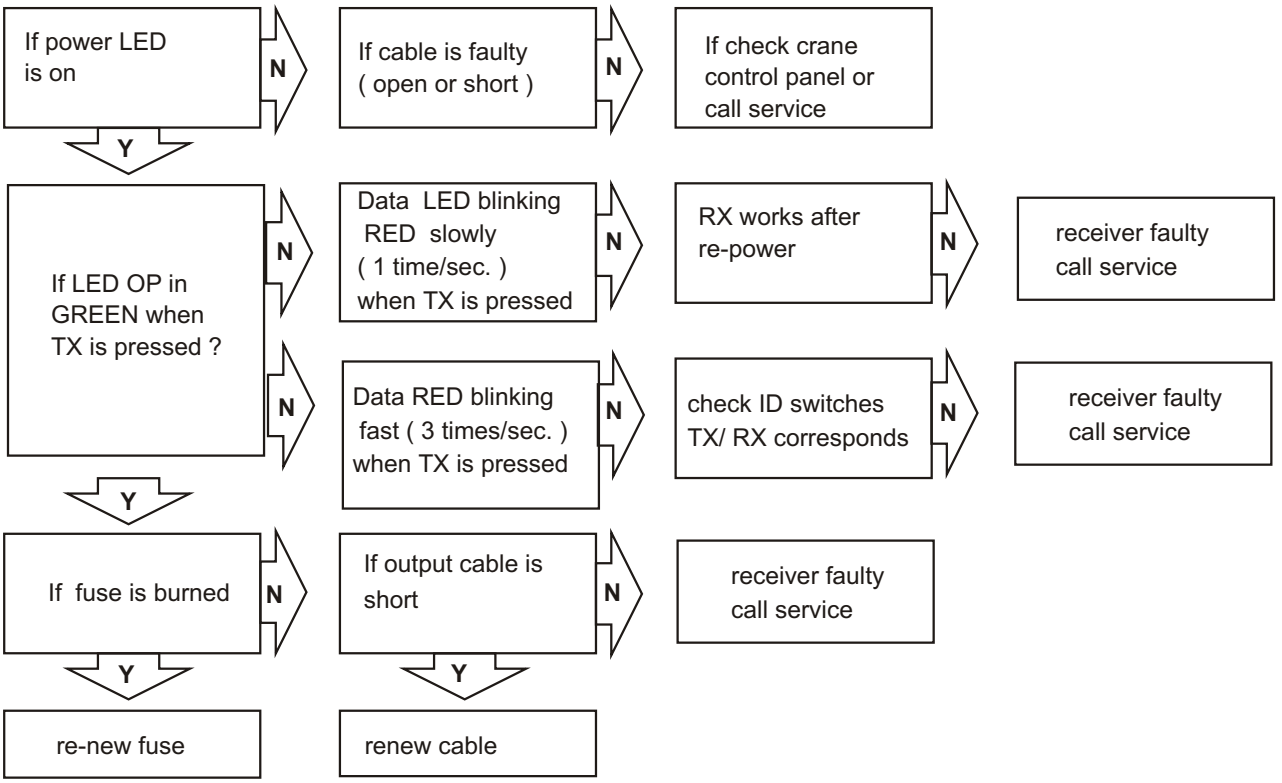

RX*: receiver

8. PARTS LIST

TRANSMITTER	
part number	**description**
QTC	trasmitter casing (incl.power switch board,rubber pushbuttons, battery case)
QSB	wrist strap
QED-100	encoder board(Q100)
QED-100S	encoder board(Q100S)
QED-100KAB	encoder board(Q100AB)
QED-211	encoder board(Q211)
QED-112	encoder board(Q112)
QED-200	encoder board(Q200)
QED-200S	encoder board(Q200S)
QED-200AB	encoder board(Q200AB)
TFP-418	418Mhz HF board
TFP-433	433Mhz HF board
TFP-868	868Mhz HF board
P01	PVC transparent protect sleeve
P02	PVC transparent double protect sleeve (IP65)
PM02	Silicon protect sleeve(prevent fall down)

	RECEIVER
part number	**description**
QBOX1.1	receiver housing incl. cable gland
QDD-100	decoder board(Q100)
QDD-100S	decoder board(Q100S)
QDD-100AB	decoder board(Q100AB)
QDD-211	decoder board(Q211)
QDD-112	decoder board(Q112)
QDD-200	decoder board(Q200)
QDD-200S	decoder board(Q200S)
QDD-200AB	decoder board(Q200AB)
RFP-418	418Mhz HF board
RFP-433	433Mhz HF board
RFP-868	868Mhz HF board
SP36-48	Switching power AC36V-48V
SP85-265	Switching power AC85V-265V
CAP16	cable 16c x 1.8 M x 0.75mm2
CAP24	cable 24c x 1.8 M x 0.75mm2

9. WIRING DIAGRAM

wiring diagram

CUPID Q100

decoder & relay board (front side)

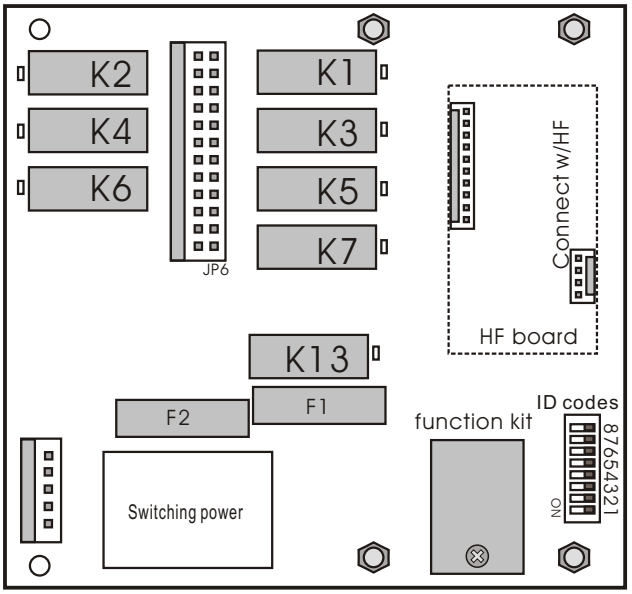

indicator panel

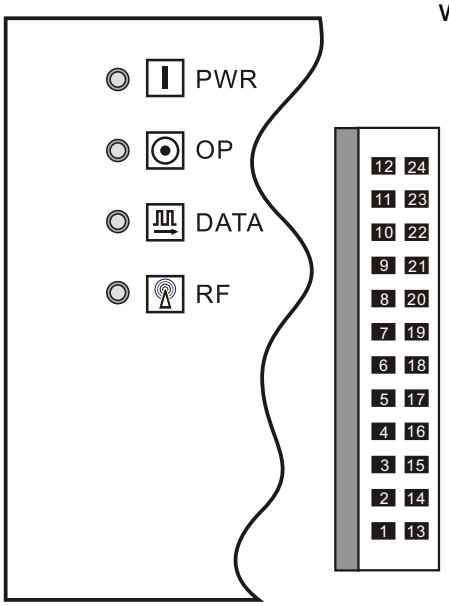

wires location

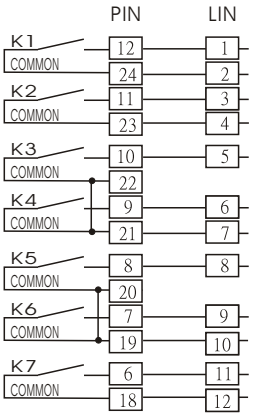

K13	Main
K1	A
K2	B
K3	C
K4	D
K5	E
K6	F
K7	G

F1	2A power fuse
F2	5A main fuse

transmitter

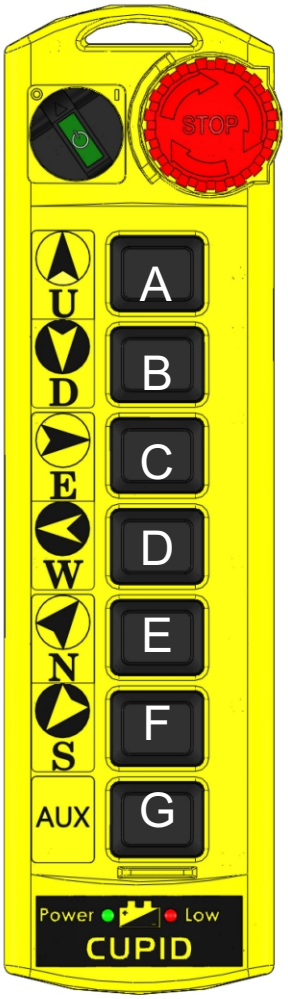

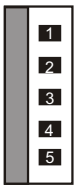

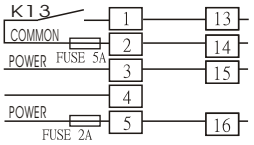

AC-36V~48V
AC-85V~265V

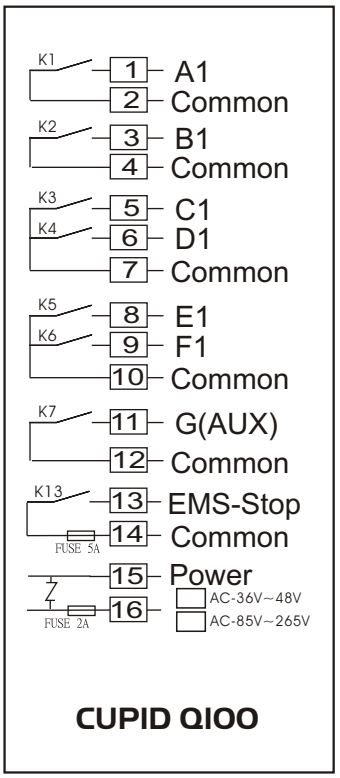

CUPID

wiring diagram

CUPID Q100S

decoder & relay board (front side)

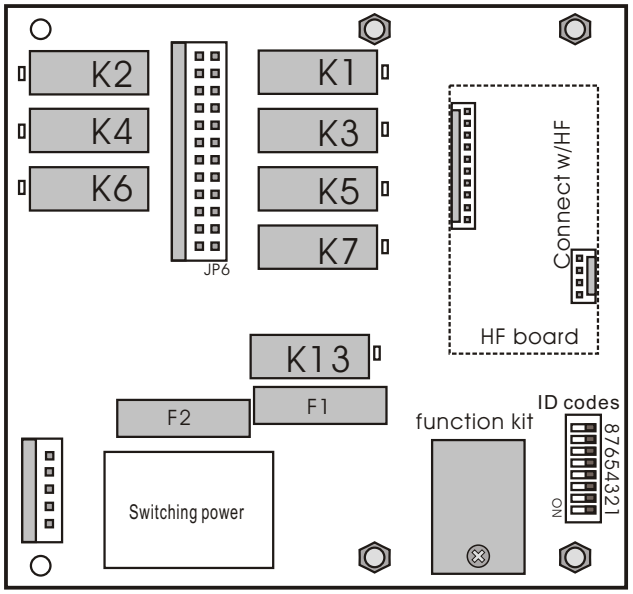

indicator panel

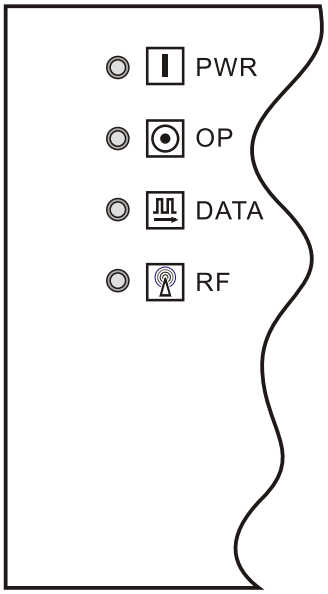

wires location

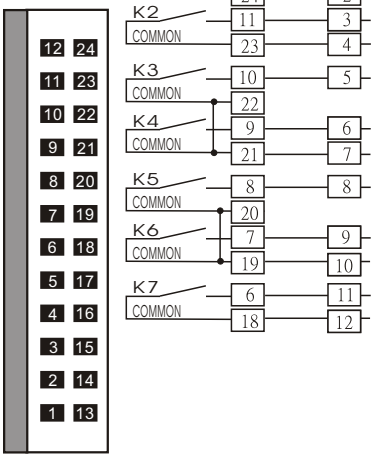

K13	Main
K1	A
K2	B
K3	C
K4	D
K5	E
K6	F
K7	G

F1	2A power fuse
F2	5A main fuse

transmitter

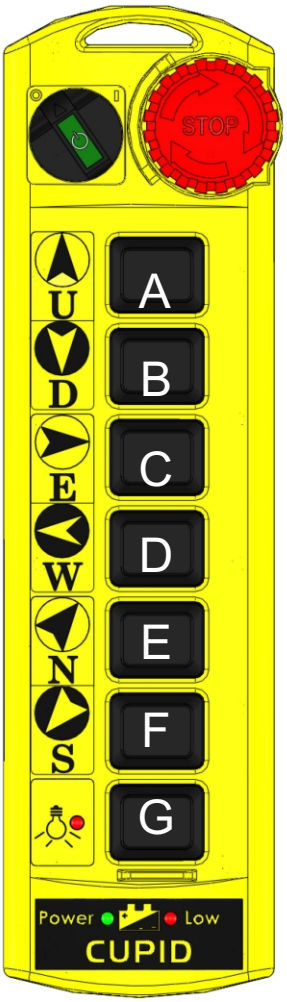

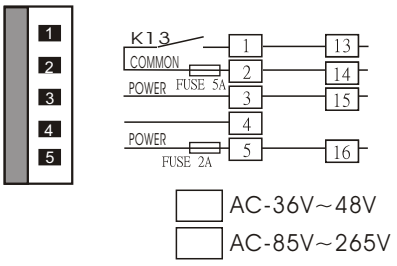

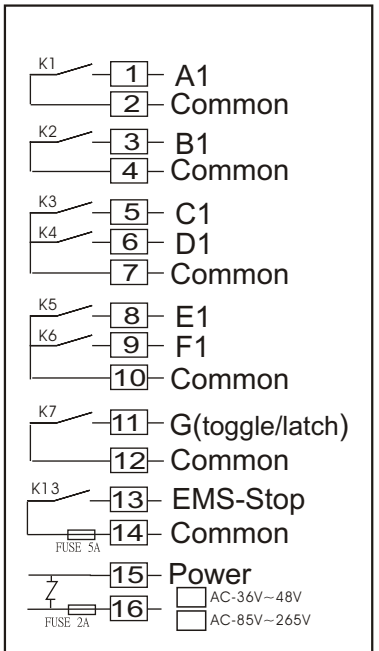

wiring diagram

CUPID Q100AB

decoder & relay board (front side)

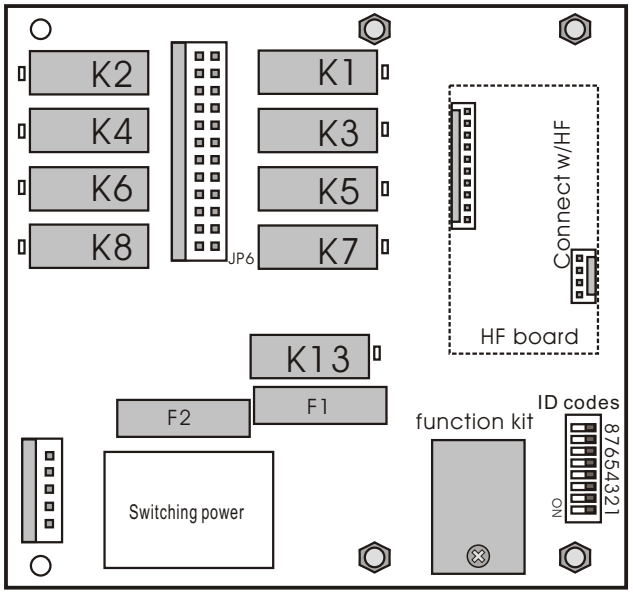

indicator panel

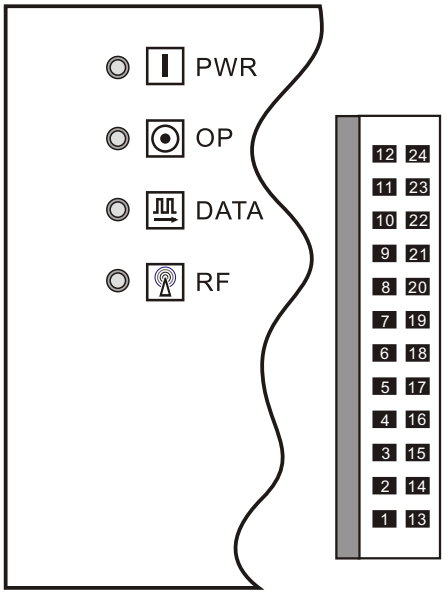

wires location

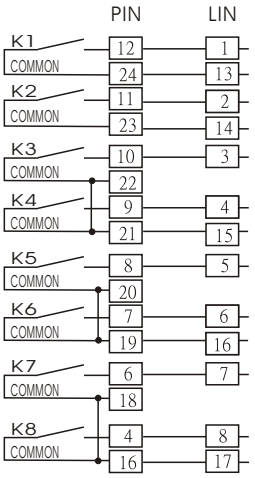

K13	Main
K1	A
K2	B
K3	C
K4	D
K5	E
K6	F
K7	G(A)
K8	G(B)

F1	2A power fuse
F2	5A main fuse

transmitter

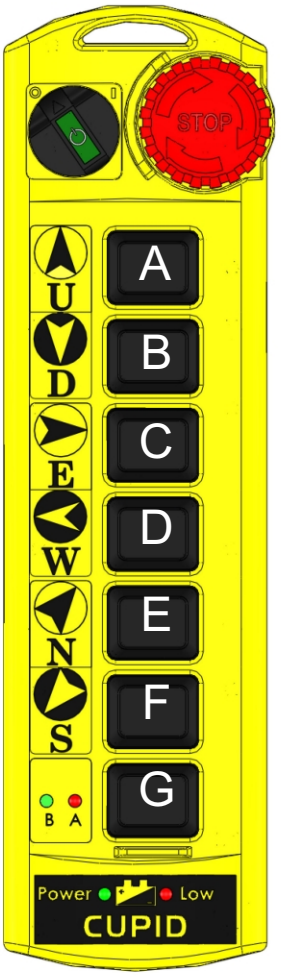

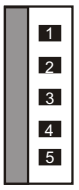

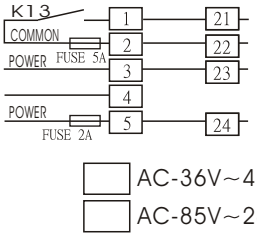

AC-36V~48V
AC-85V~265V

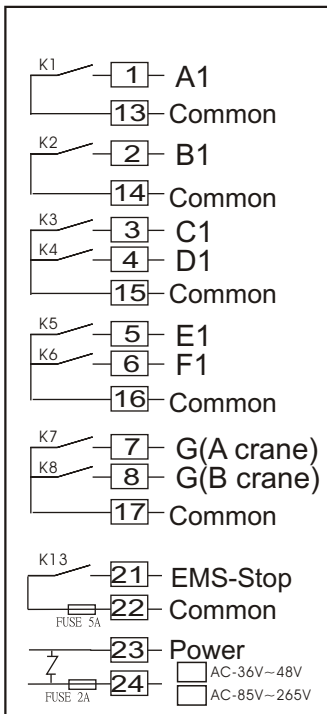

CUPID QIOOAB

CUPID

wiring diagram

CUPID Q112

decoder & relay board (front side)

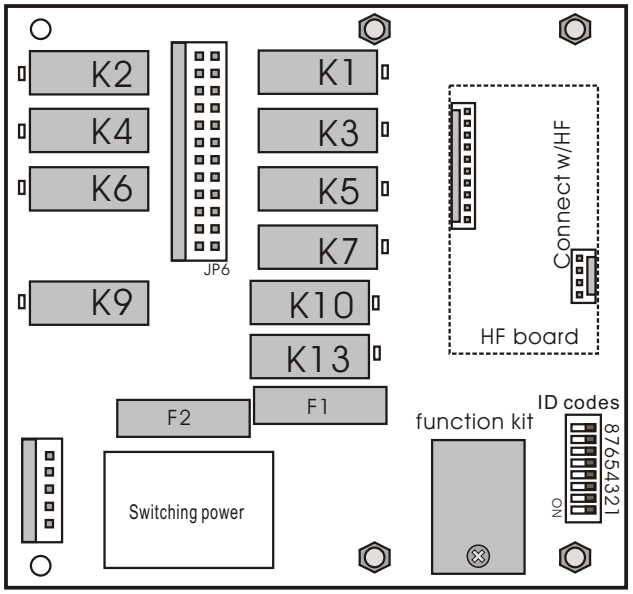

K13	Main
K1	A
K2	B
K3	C
K4	D
K5	E
K6	F
K7	G
K9	A step2
K10	B step2

F1	2A power fuse
F2	5A main fuse

indicator panel

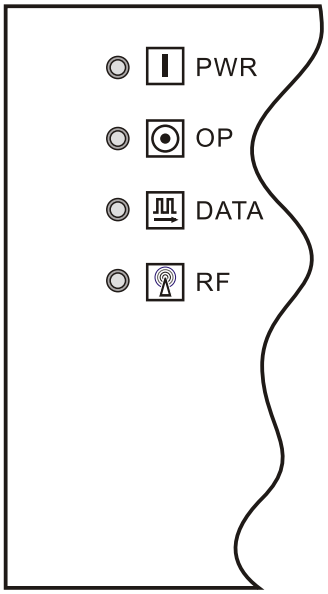

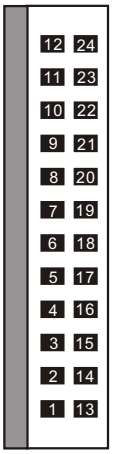

wires location

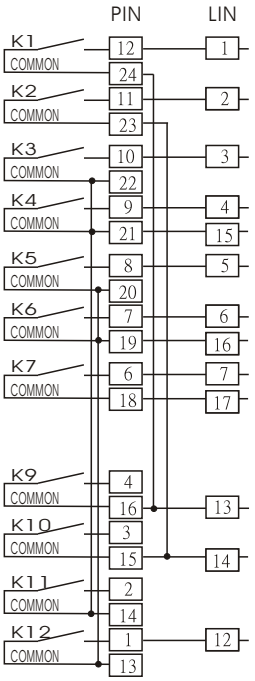

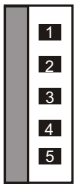

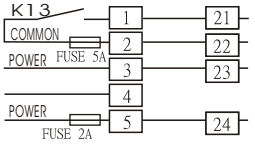

AC-36V~48V
AC-85V~265V

transmitter

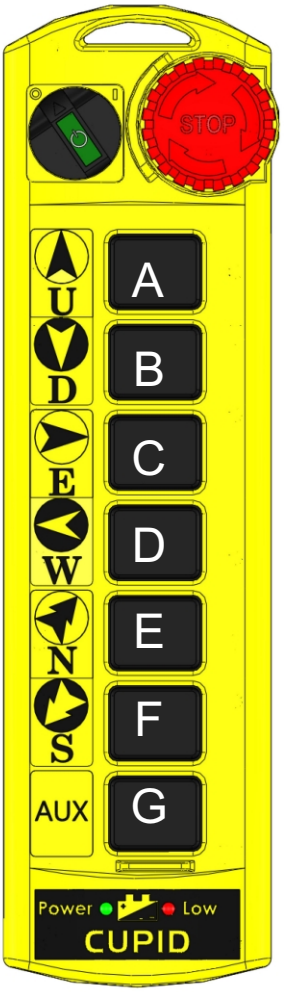

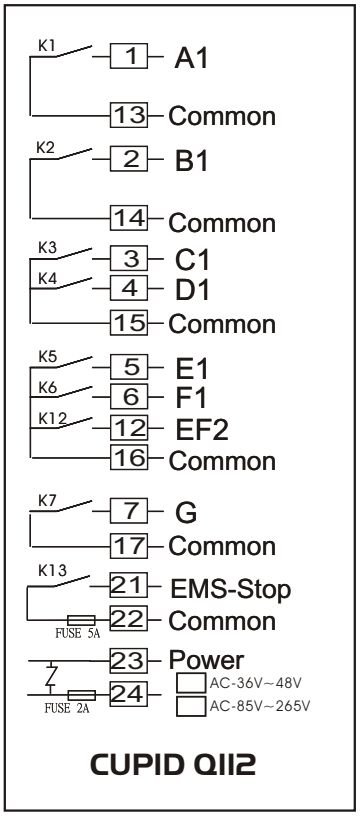

wiring diagram

CUPID Q211

decoder & relay board (front side)

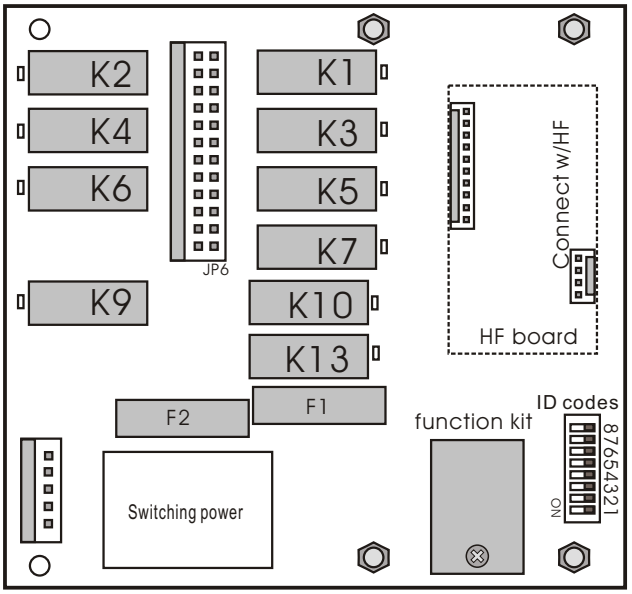

indicator panel

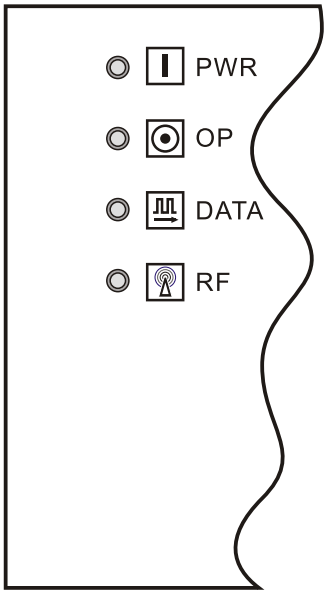

wires location

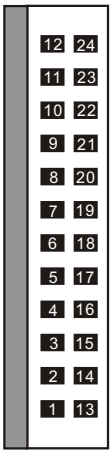

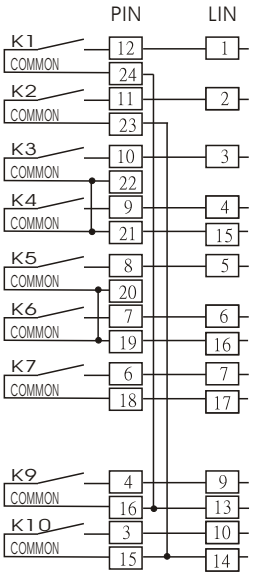

K13	Main
K1	A
K2	B
K3	C
K4	D
K5	E
K6	F
K7	G
K9	A step2
K10	B step2

F1	2A power fuse
F2	5A main fuse

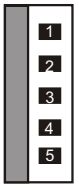

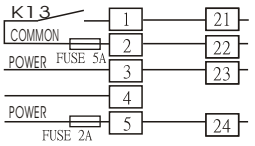

AC-36V~48V
AC-85V~265V

transmitter

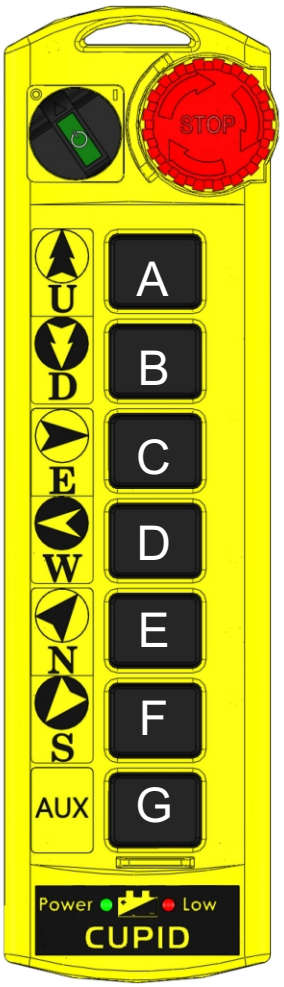

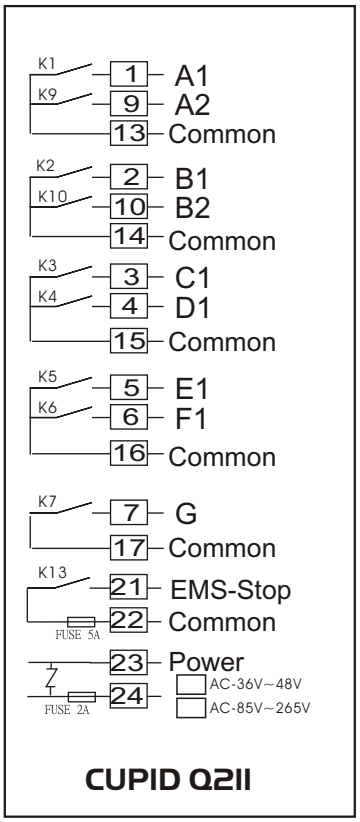

CUPID Q211

wiring diagram

CUPID Q200

decoder & relay board (front side)

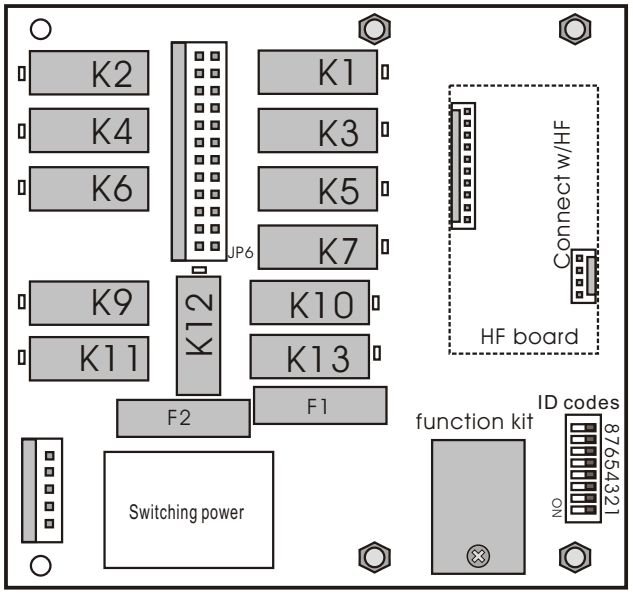

indicator panel

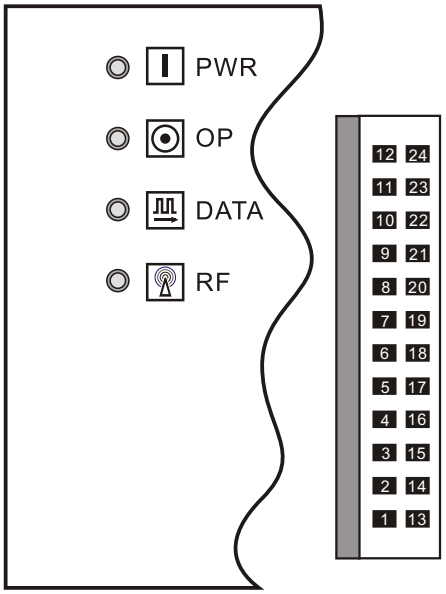

wires location

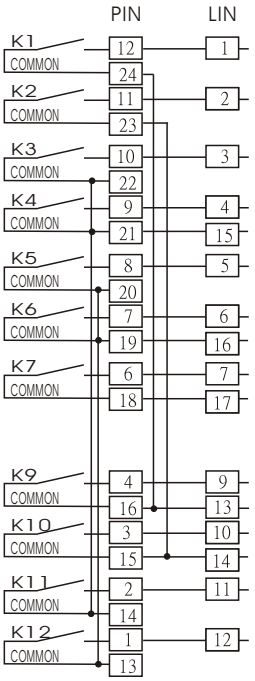

K13	Main
K1	A
K2	B
K3	C
K4	D
K5	E
K6	F
K7	G
K9	A step2
K10	B step2
K11	C/D step2
K12	E/F step2

F1	2A power fuse
F2	5A main fuse

transmitter

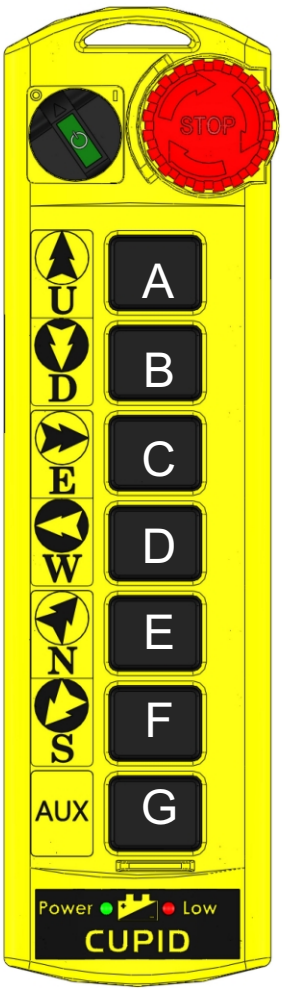

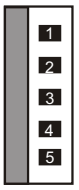

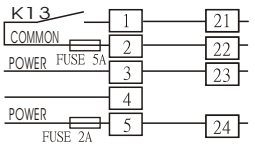

AC-36V~48V
AC-85V~265V

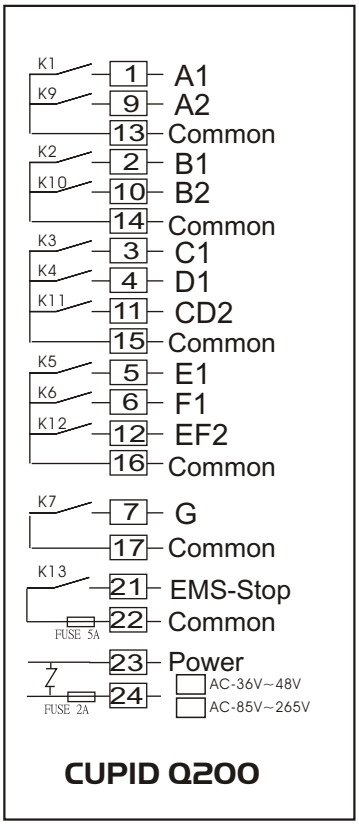

CUPID

wiring diagram

CUPID Q200S

decoder & relay board (front side)

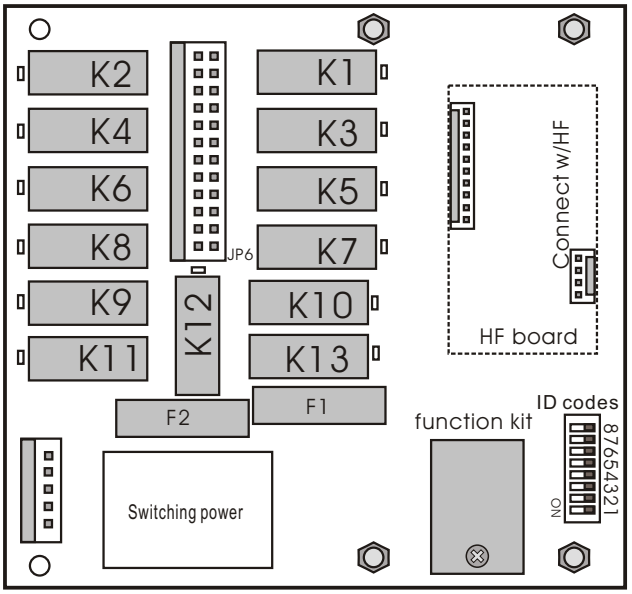

K13	Main
K1	A
K2	B
K3	C
K4	D
K5	E
K6	F
K7	G
K9	A step2
K10	B step2
K11	C/D step2
K12	E/F step2

F1	2A power fuse
F2	5A main fuse

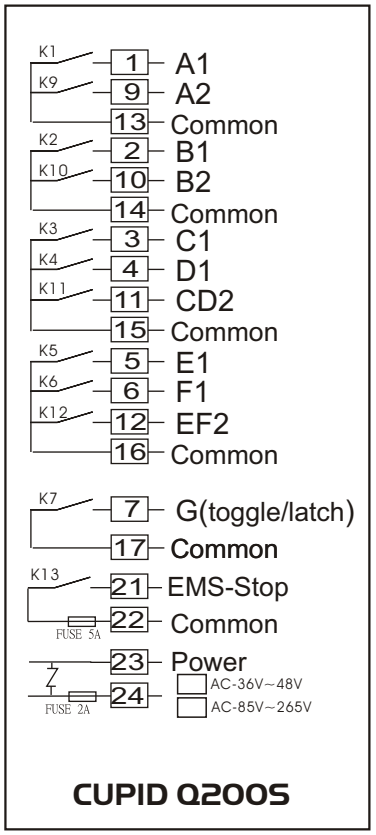

indicator panel

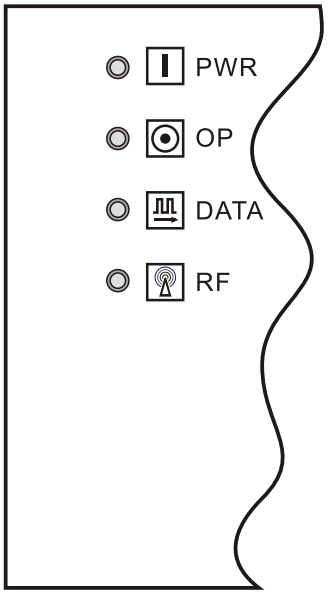

wires location

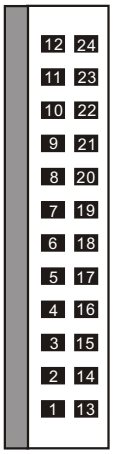

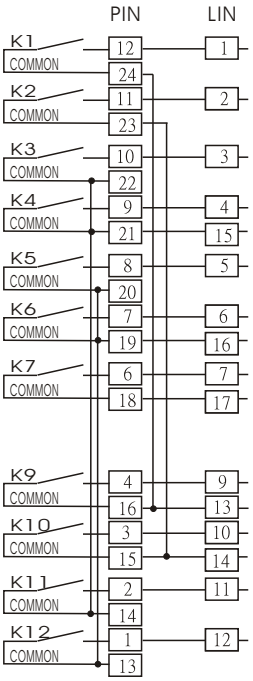

transmitter



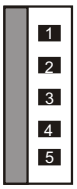

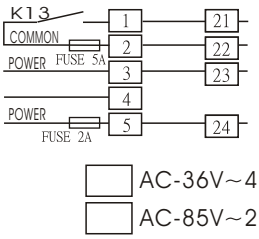

wiring diagram

CUPID Q200AB

decoder & relay board (front side)

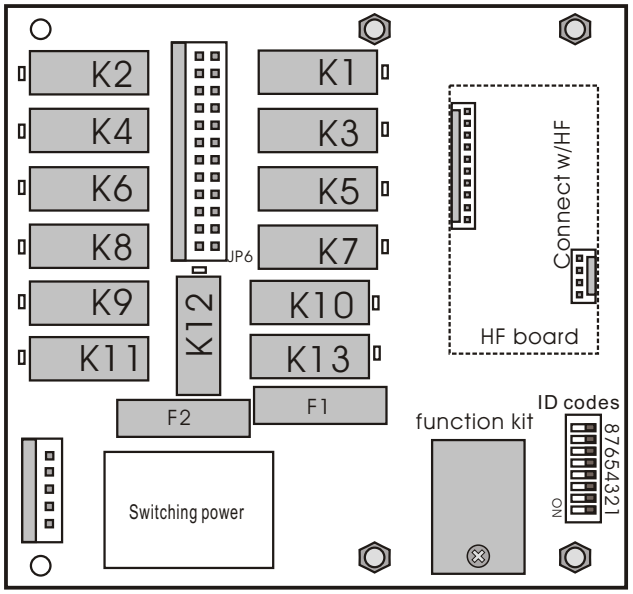

indicator panel

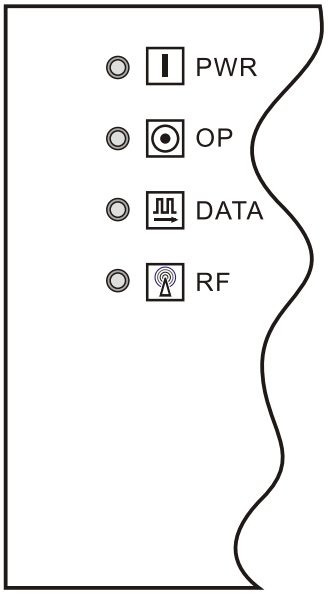

wires location

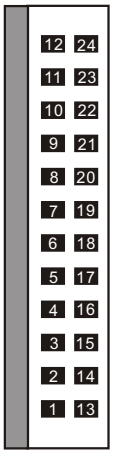

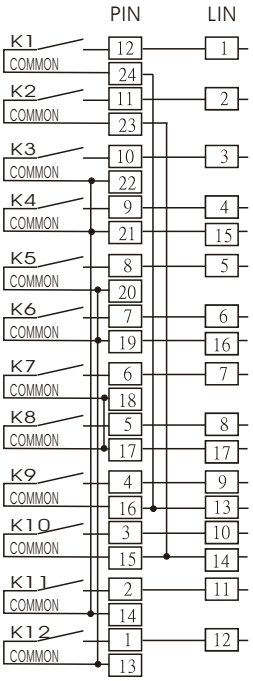

K13	Main
K1	A
K2	B
K3	C
K4	D
K5	E
K6	F
K7	G(A)
K8	G(B)
K9	A step2
K10	B step2
K11	C/D step2
K12	E/F step2

F1	2A power fuse
F2	5A main fuse

transmitter

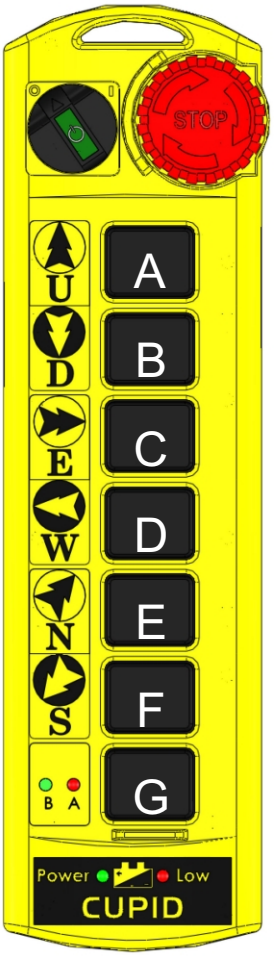

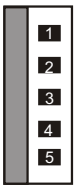

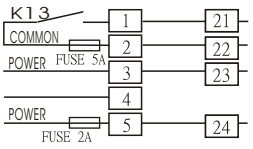

AC-36V~48V
AC-85V~265V

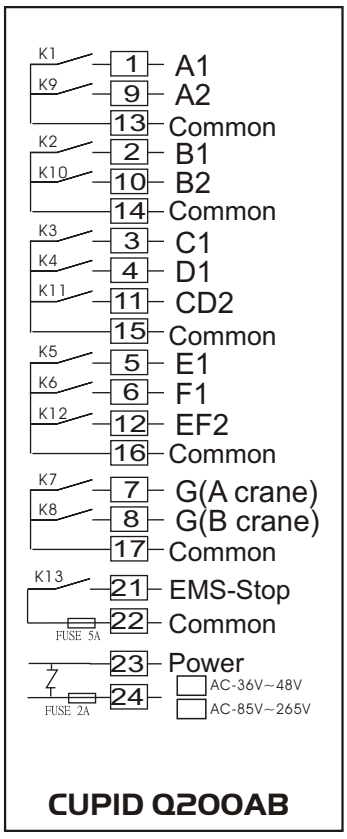

WARRANTY

The equipment is warranted for one year from date of purchase against defects in materials or workmanship provided it was purchased from 3-Elite or authorized dealer.

This warranty does not cover equipment which has been abused or damaged by careless handling or shipping, OR damaged by nature disaster such as earthquake, typhoon etc.

The careless handling including self-change components, antenna, voltage; or circuits, and switches increased would be deemed as end of warranty, user should cover the repairing fee.

Should any defect develop, we will, at our option, repair or replace any defective parts without charge for either parts or labour. If we cannot correct the defect in your equipment, we will replace it at no charge with a new one. We will pay for the cost of returning your merchandise to you.

This warranty applies only to items returned to us, shipping costs prepaid, within one year from the date of purchase.

distributor

STANDARD ACCESSORY

- ☐ transmitter x 1
- ☐ receiver x 1
- ☐ handbook x 1
- ☐ screw x 4
- ☐ transmitter sleeve x 2