2-way cartridge valves, directional functions

Type LC (cartridge valves)
Type LFA (control cover)

RE 21010
Edition: 2017-05
Replaces: 2014-09



H8030...8033

- Standard series
- Size 16 ... 160
- Component series 2X; 6X; 7X
- Maximum operating pressure 420 bar
- Maximum flow 25,000 l/min

Features

- Valve poppet with or without damping nose
- 2 area ratios
- 6 different cracking pressures
- 4 stroke limitations
- Control cover with integrated seat valve
- Control cover with integrated shuttle valve
- Control cover for set-up of directional spool valves with or without installed shuttle valve

Contents

Features	1
Function, sections, symbol	3
Installation bore and connection dimensions	4, 5
Technical data	6
Cartridge valve type LC	
Ordering code	7
Symbols	7
Technical data	8, 9
Characteristic curves	10 ... 13
Control cover type LFA	
Ordering code	14, 15
Symbols	16, 17
Control cover "D"	18, 19
Control cover "H."	20 ... 25
Control cover "G"	26 ... 29
Control cover "R" and "RF"	30 ... 33
Control cover "WEA" and "WEB"	34 ... 41
Control cover "WEMA" and "WEMB"	42 ... 49
Control cover "WECA"	50 ... 55
Control cover "GWA" and "GWB"	56 ... 61
Control cover "GWMA"	62 ... 69
Control cover "GWMA20"	70 ... 77
Control cover "KWA" and "KWB"	78 ... 83
Control cover "KWMA"	84 ... 89
Control cover "HWMA" and "HWMB"	90 ... 93
Intermediate cover "D19"	94
Mounting screws control cover LFA	95
Characteristic curves for selecting orifices	95
Orifices and plug screws	96
Additional functions with special numbers	97 ... 101
Further information	101

Function, sections, symbol

2-way cartridge valves are elements that have been designed for a compact block design. The power section with connections A and B is installed into the control block in a receiving hole standardized according to ISO 7368 and closed with a cover. In most cases, the cover is simultaneously the connection from the control side of the power section to the pilot control valves. By control with respective pilot control valves, the power section can be applied for pressure, directional and throttle functions or a combination of these functions. Particularly efficient solutions are realized by adjustment of the size to various flows of the individual ways of an actuator. The application of power sections of elements for multiple functions is very cost-effective.

2-way cartridge valves generally consist of control cover (1) and installation kit (2). The control cover contains the control bores and optionally a stroke limitation function, a hydraulically controlled directional seat valve or a shuttle valve according to the required overall function. Additionally, electrically operated directional spool or seat valves can be installed at a control cover. The installation kit consists of a bushing (3), ring (4) (only up to NG32), valve poppet (5), optionally with damping nose (6) or without damping nose (7) as well as closing spring (8). The function of 2-way cartridge valves is pressure-dependent. This way, three crucial pressurized areas $\boldsymbol{A}_1$, $\boldsymbol{A}_2$, $\boldsymbol{A}_3$ are realized for the function. The area at the valve seat $\boldsymbol{A}_1$ is considered as 100%. Depending on the version, the annulus area $\boldsymbol{A}_2$ realized by grading is 7% or 50% of area $\boldsymbol{A}_1$. The area ratio $\boldsymbol{A}_1 : \boldsymbol{A}_2$ is respectively either 14.3 : 1 or 2 : 1. The area A_3 is identical to the sum of areas $\boldsymbol{A}_1 + \boldsymbol{A}_2$. Due to the different area ratios $\boldsymbol{A}_1 : \boldsymbol{A}_2$ and the resulting different annulus areas ($\boldsymbol{A}_2$), the area $\boldsymbol{A}_3$ is one time 107% and another time 150% of the area $\boldsymbol{A}_1$ at the seat, which is observed as 100%.

In general, the following applies:
The areas $\boldsymbol{A}_1$ and $\boldsymbol{A}_2$ are effective in opening direction. The area $\boldsymbol{A}_3$ and the spring are effective in closing direction. The direction of action of the resulting force from the opening and closing forces determines the spool position of the 2-way cartridge valve.
The 2-way cartridge valves can be passed from A to B or from B to A. Pressurization of area $\boldsymbol{A}_3$ by pilot oil discharge from channel B or external pilot oil supply, channel A is blocked in a leakage-free manner.

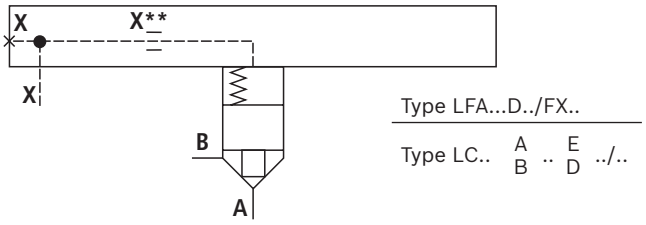

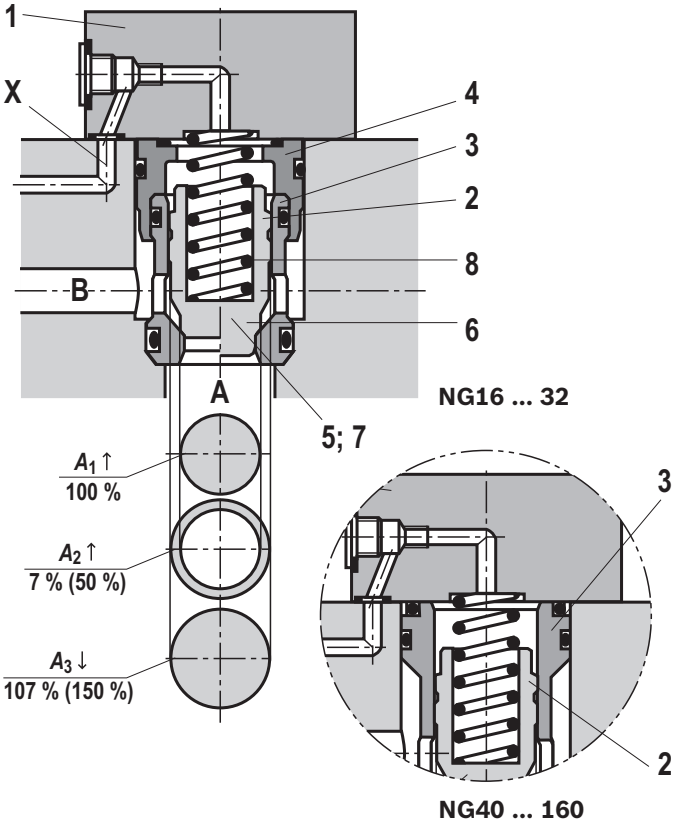

Installation bore and connection dimensions according to ISO 7368
(dimensions in mm)

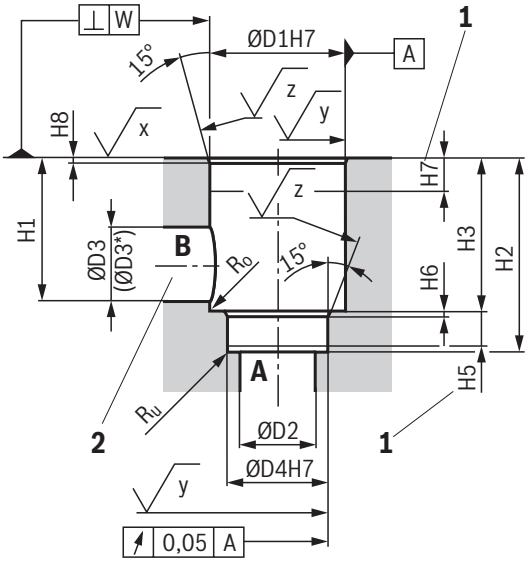

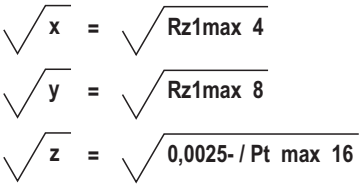

NG16 ... 63

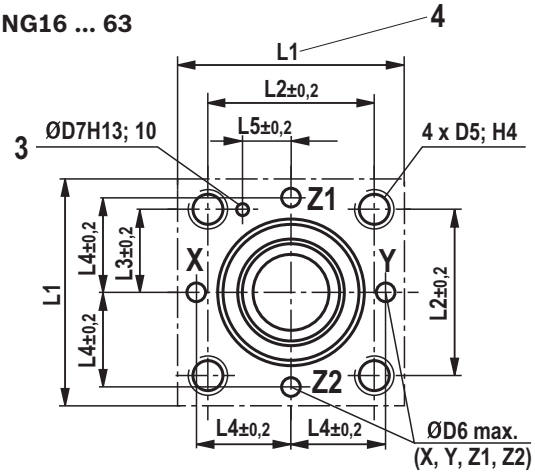

NG80 ... 100

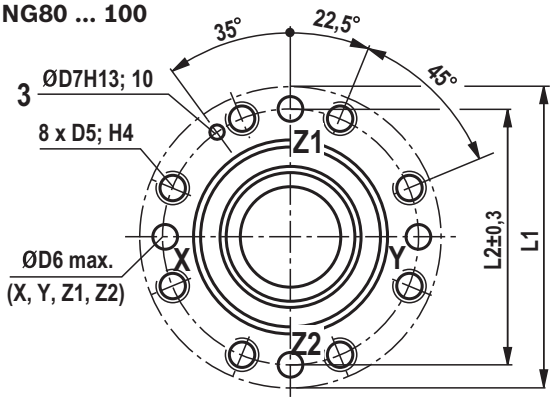

NG125

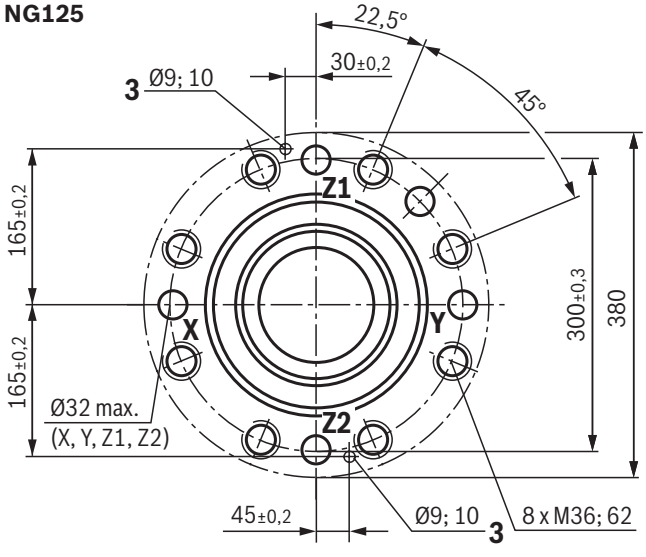

Size 160, dimensions and **item explanations,** see page 5.

Installation bore and connection dimensions according to ISO 7368
(dimensions in mm)

NG	16	25	32	40	50	63	80	100	125	160
ØD1H7	32	45	60	75	90	120	145	180	225	300
ØD2	16	25	32	40	50	63	80	100	150 [2]	200 [2]
ØD3	16	25	32	40	50	63	80	100	125	160
(ØD3*) [1]	25	32	40	50	63	80	100	125	160	250
ØD4H7	25	34	45	55	68	90	110	135	200	270
ØD5 [3]	M8	M12	M16	M20	M20	M30	M24	M30	–	–
ØD6	4	6	8	10	10	12	16	20	–	–
ØD7H13	4	6	6	6	8	8	10	10	–	–
H1	42.5	57	68.5	84.5	97.5	127	170.5	205.5	255	368
H2	$56^{+0.1}$	$72^{+0.1}$	$85^{+0.1}$	$105^{+0.1}$	$122^{+0.1}$	$155^{+0.1}$	$205^{+0.1}$	$245^{+0.1}$	$300^{+0.15}$	$425^{+0.15}$
H3	$43^{+0.2}$	$58^{+0.2}$	$70^{+0.2}$	$87^{+0.3}$	$100^{+0.3}$	$130^{+0.3}$	$175^{\pm0.4}$	$210^{\pm0.4}$	$257^{\pm0.5}$	$370^{\pm0.5}$
H4	20	25	35	45	45	65	50	63	–	–
H5	11	12	13	15	17	20	25	29	31	45
H6	2	2.5	2.5	3	3	4	5	5	$7^{\pm0.5}$	$8^{\pm0.5}$
H7	20	30	30	30	35	40	40	50	40	50
H8	2	2.5	2.5	3	4	4	5	5	$5.5^{\pm0.2}$	$5.5^{\pm0.2}$
H9	0.5	1	1.5	2.5	2.5	3	4.5	4.5	2	2
L1	65/80	85	102	125	140	180	250	300	–	–
L2	46	58	70	85	100	125	200	245	–	–
L3	23	29	35	42.5	50	62.5	–	–	–	–
L4	25	33	41	50	58	75	–	–	–	–
L5	10.5	16	17	23	30	38	–	–	–	–
W	0.05	0.05	0.1	0.1	0.1	0.1	0.1	0.1	0.1	0.1
R_o [2]	2	2	2	4	4	4	4	4	4	6.3
R_u [2]	1	1	1	1	1	1	1	1	1	1

[1] Due to the use of a bore with ØD3*, port B protrudes over the upper limit of the area intended in ISO 7368. This is, however, possible due to the sealing concept and reduces the pressure loss during flow through the valve. Thus, we recommend a bore with ØD3*.

[2] Maximum dimension

[3] Mounting thread for version "/12" see data sheet 08936

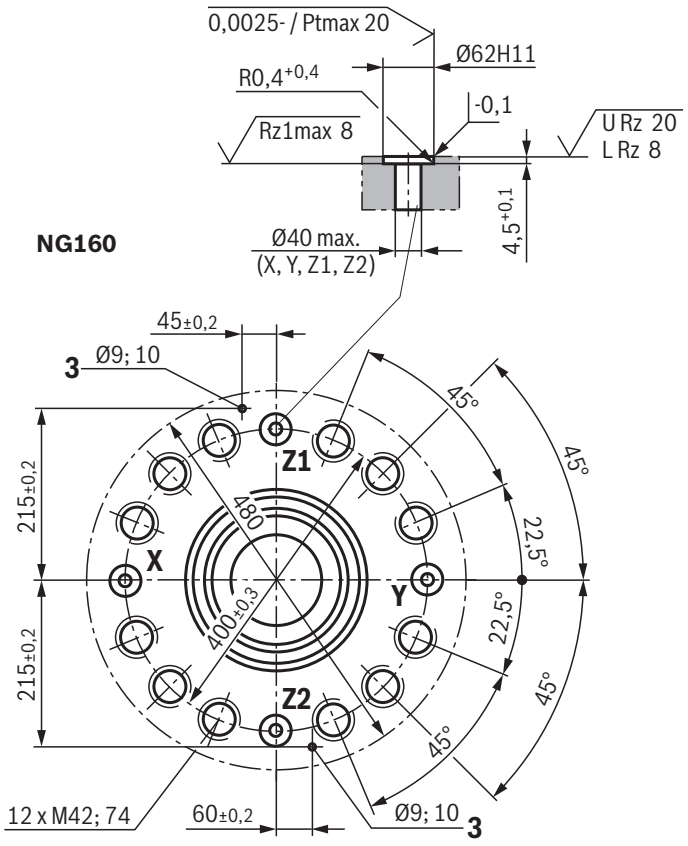

1 Depth of fit

2 Port B can be positioned around the central axis of port A. However, it must be observed that the mounting bores and the control bores are not damaged.

3 Bore for locating pin

4 80 mm only with control cover for directional valve set-up NG16 (axis X–Y bores)

Technical data
(For applications outside these parameters, please consult us!)

general											
Size			16	25	32	40	50	63	80	100	125	160
Weight	▶ Type LC	kg	0.25	0.5	1.1	1.9	3.9	7.2	13.0	27.0	44.0	75.0
	▶ Type LFA	kg	1.2	2.3	4.0	7.4	10.5	21.0	27.0	42.0	80.0	150.0
Ambient temperature range		°C	–30 ... +60 (NBR seals) –20 ... +60 (FKM seals)									
$MTTF_D$ values according to EN ISO 13849		Years	150 (for further details, see data sheet 08012)									

hydraulic			
Maximum operating pressure	▶ Without directional valve	bar	420
	▶ Port A, B, X, Z1, Z2	bar	315; 350; 420 (dependent on the attached directional valve)
	▶ Port Y	bar	Depending on the maximum tank pressure of the attached directional valve
Maximum flow		l/min	25000 (NG-dependent; see characteristic curves page 10 ... 13
Hydraulic fluid			See table below
Hydraulic fluid temperature range		°C	–30 ... +80 (NBR seals) –20 ... +80 (FKM seals)
Viscosity range		mm^2/s	2.8 ... 500
Maximum admissible degree of contamination of the hydraulic fluid, cleanliness class according to ISO 4406 (c)			Class 20/18/15 [1]

Hydraulic fluid		Classification	Suitable sealing materials	Standards	Data sheet
Mineral oils		HL, HLP, HLPD, HVLP, HVLPD	NBR, FKM	DIN 51524	90220
Bio-degradable [2]	▶ Insoluble in water	HETG	FKM	ISO 15380	90221
		HEES	FKM		
	▶ Soluble in water	HEPG	FKM	ISO 15380	
Flame-resistant	▶ Water-free	HFDU (glycol base)	FKM	ISO 12922	90222
		HFDU (ester base) [2]	FKM		
	▶ containing water [2]	HFC (Fuchs Hydrotherm 46M, Petrofer Ultra Safe 620)	NBR	ISO 12922	90223

☞ **Important information on hydraulic fluids:**
- ▶ For further information and data on the use of other hydraulic fluids, please refer to the data sheets above or contact us.
- ▶ There may be limitations regarding the technical valve data (temperature, pressure range, life cycle, maintenance intervals, etc.).
- ▶ **Flame-resistant – containing water**:
  - – Life cycle as compared to operation with mineral oil HL, HLP 30 ... 100%
  - – Maximum hydraulic fluid temperature 60 °C
- ▶ **Bio-degradable and flame-resistant:** If this hydraulic fluid is used, small amounts of dissolved zinc may get into the hydraulic system.

[1] The cleanliness classes specified for the components must be adhered to in hydraulic systems. Effective filtration prevents faults and simultaneously increases the life cycle of the components.
Available filters can be found at www.boschrexroth.com/filter.

[2] Not recommended for corrosion-protected version "J3" (contains zinc)

Ordering code: Cartridge valve (without control cover)

01	02	03	04	05	06		07
LC						**/**	

01	Cartridge valve	**LC**

02	Size 16	**16**
	Size 25	**25**
	Size 32	**32**
	Size 40	**40**
	Size 50	**50**
	Size 63	**63**
	Size 80	**80**
	Size 100	**100**
	Size 125	**125**
	Size 160	**160**

Spool design (for area ratio see section on page 3)

03	$A_1 : A_2 = 2 : 1$ ($A_2 = 50\%$)	**A**
	$A_1 : A_2 = 14.3 : 1$ ($A_2 = 7\%$)	**B**

04	Cracking pressure 0 bar (without spring)	**00**
	Cracking pressure ca. 0.5 bar	**05**
	Cracking pressure ca. 1 bar	**10**
	Cracking pressure ca. 2 bar	**20**
	Cracking pressure ca. 3 bar (only NG125)	**30**
	Cracking pressure ca. 4 bar (not NG125)	**40**
	For the exact values see page 8.	

05	Valve poppet **without** damping nose	**E**
	Valve poppet **with** damping nose	**D**

06	Component series 70 ... 79 (70 ... 79: unchanged installation and connection dimensions) (NG16 ... 63)	**7X**
	Component series 60 ... 69 (60 ... 69: unchanged installation and connection dimensions) (NG80 ... 100)	**6X**
	Component series 20 ... 29 (20 ... 29: unchanged installation and connection dimensions) (NG125 ... 160)	**2X**

Seal material

07	NBR seals	**no code**
	FKM seals	**V**
	Attention: Observe compatibility of seals with hydraulic fluid used. (Other seals upon request)	

Symbols

Version "E"		**Version "D"**	
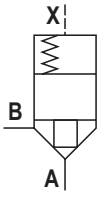	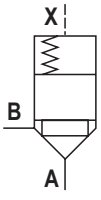	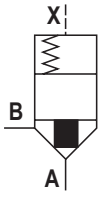	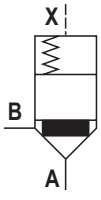
Area ratio $A_1 : A_2 = 2 : 1$ Version "...A.E..."	Area ratio $A_1 : A_2 = 14.3 : 1$ Version "...B.E..."	Area ratio $A_1 : A_2 = 2 : 1$ Version "...A.D..."	Area ratio $A_1 : A_2 = 14.3 : 1$ Version "...B.D..."

Additional functions with special numbers see page 97.

Technical data: Cartridge valve (without control cover)
(For applications outside these parameters, please consult us!)

Size of the annulus area

Area in cm^2	**Design**	**Size**									
		16	**25**	**32**	**40**	**50**	**63**	**80**	**100**	**125**	**160**
A_1	LC..A..	1.89	4.26	6.79	11.1	19.63	30.2	37.9	63.6	95	160.6
	LC..B..	2.66	5.73	9.51	15.55	26.42	41.28	52.8	89.1	133.7	224.8
A_2	LC..A..	0.95	1.89	3.39	5.52	8.64	14.0	18.84	31.4	48	79.9
	LC..B..	0.18	0.43	0.67	1.07	1.85	2.90	3.94	5.9	9.3	15.7
A_3	LC..A..	2.84	6.16	10.18	16.62	28.27	44.2	56.74	95	143	240.5
	LC..B..	2.84	6.16	10.18	16.62	28.27	44.2	56.74	95	143	240.5

Spool form (damping nose)

		Design	**Size**									
			16	**25**	**32**	**40**	**50**	**63**	**80**	**100**	**125**	**160**
Stroke	cm	LC..E..	0.9	1.17	1.4	1.7	2.1	2.3	2.4	3.0	3.8	5.0
		LC..D..	0.9	1.17	1.4	1.9	2.3	2.8	3.0	3.8	4.8	6.5
Pilot volume	cm^3	LC..E..	2.56	7.21	14.3	28.3	59.4	102	136	285	544	1203
		LC..D..	2.56	7.21	14.3	31.6	65.0	124	170	361	687	1563
Theoretical pilot flow [1)]	l/min	LC..E..	15.4	43.3	86	170	356	612	816	1710	3264	7218
		LC..D..	15.4	43.3	86	190	390	744	1020	2166	4122	9378

☞ **Notice:**
Spools with damping nose are mainly used in applications with stroke limitation and spool position monitoring. Due to the better flow values, we recommend the spool without damping nose by default.

Technical data: Cartridge valve (without control cover)
(For applications outside these parameters, please consult us!)

Cracking pressure in bar

		Size									
	Design	**16**	**25**	**32**	**40**	**50**	**63**	**80**	**100**	**125**	**160**
Direction of flow A to B	LC..A 00..	0.02	0.025	0.05	0.05	0.05	0.07	0.07	0.1	0.15	0.15
	LC..A 05..	0.35	0.35	0.36	0.35	0.37	0.31	0.44	0.43	0.43	0.45
	LC..A 10..	0.70	0.68	0.72	0.71	0.67	0.64	0.88	0.88	0.88	–
	LC..A 20..	2.03	2.18	2.12	2.02	2.01	2.0	1.75	1.75	1.76	1.94
	LC..A 30..	–	–	–	–	–	–	–	–	2.05	–
	LC..A 40..	3.50	3.90	3.80	4.0	4.11	3.8	3.13	3.04	–	4.42
	LC..B 00..	0.014	0.02	0.035	0.035	0.035	0.05	0.05	0.07	0.1	0.1
	LC..B 05..	0.25	0.26	0.26	0.25	0.28	0.23	0.31	0.31	0.31	0.32
	LC..B 10..	0.49	0.50	0.51	0.51	0.48	0.47	0.63	0.63	0.62	–
	LC..B 20..	1.44	1.62	1.52	1.44	1.5	1.5	1.26	1.25	1.25	1.4
	LC..B 30..	–	–	–	–	–	–	–	–	1.45	–
	LC..B 40..	2.48	2.90	2.70	2.86	3.05	2.8	2.25	2.17	–	3.35
Direction of flow B to A	LC..A 00..	0.04	0.05	0.1	0.1	0.1	0.14	0.14	0.2	0.30	0.33
	LC..A 05..	0.69	0.78	0.72	0.7	0.84	0.68	0.88	0.88	0.86	0.91
	LC..A 10..	1.38	1.53	1.42	1.43	1.47	1.37	1.77	1.78	1.73	–
	LC..A 20..	4.05	4.91	4.25	4.06	4.57	4.33	3.53	3.54	3.50	3.9
	LC..A 30..	–	–	–	–	–	–	–	–	4.0	–
	LC..A 40..	6.96	8.74	7.6	8.05	9.34	8.15	6.3	6.2	–	8.76
	LC..B 00..	0.24	0.25	0.5	0.5	0.5	0.8	0.7	1.0	1.5	1.5
	LC..B 05..	3.69	3.40	3.64	3.64	3.95	3.27	4.2	4.6	4.4	4.6
	LC..B 10..	7.43	6.69	7.24	7.37	6.88	6.62	8.4	9.4	8.9	–
	LC..B 20..	21.3	21.5	21.6	20.9	21.4	20.9	16.9	18.7	17.9	20
	LC..B 30..	–	–	–	–	–	–	–	–	20.7	–
	LC..B 40..	36.6	38.3	38.6	41.5	43.6	39.4	30.2	32.5	–	44.7

[1] Theoretical pilot flow for realization of a switching time of 10 ms

Characteristic curves: without damping nose "E", A → B
(simulated with HLP46, ϑ_{Oil} = 40 ±5 °C)

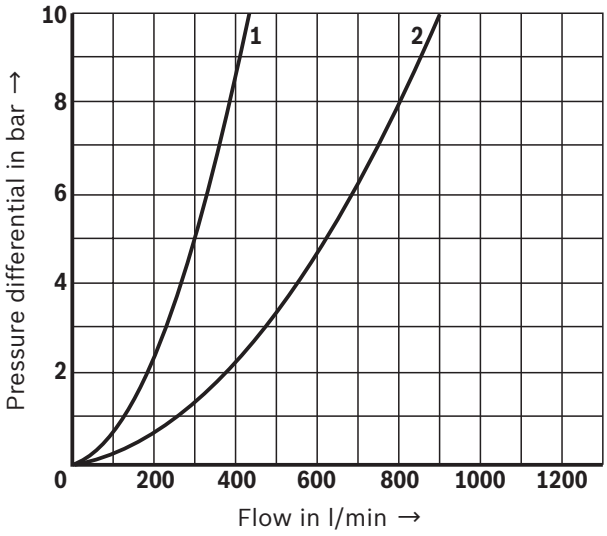

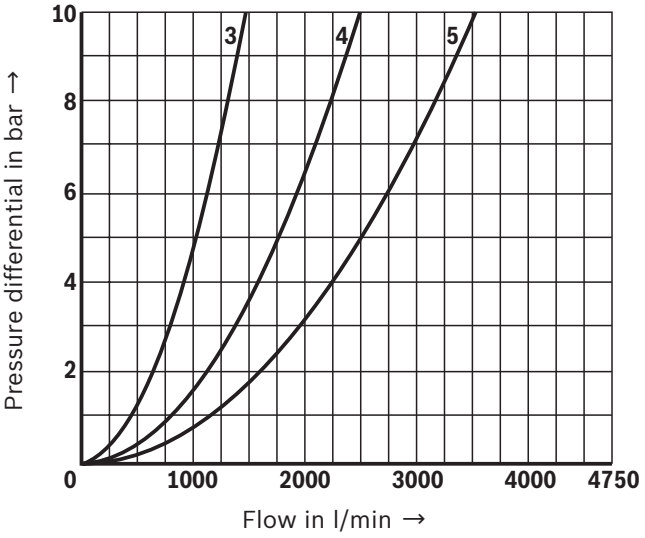

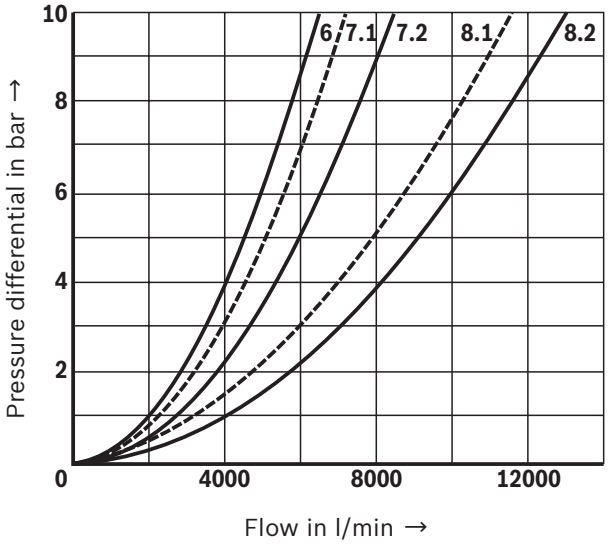

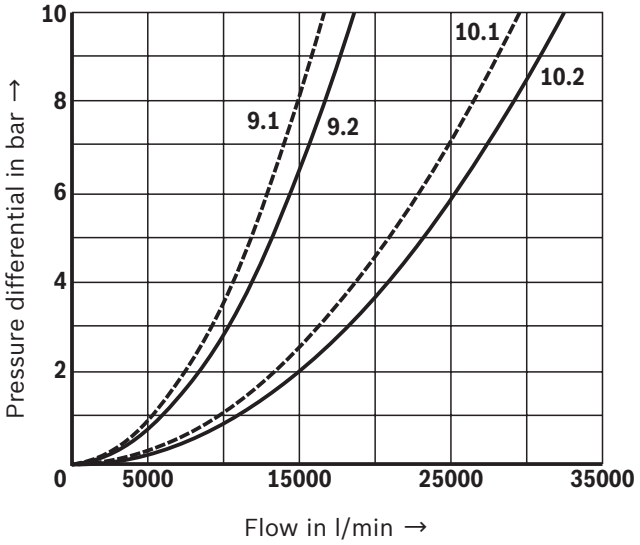

☞ **Notice:**
The specified characteristic curves were simulated with 100% spool stroke and an aligned socket (see sketch below). The simulation results were validated by measurement results. The basis was an installation geometry with ØD3* (see installation bore page 4) and a simulation model according to ISO 4411/2008-10-01.

Recommended socket alignment:

NG16 ... 32

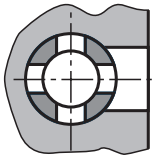

Bore on bore

NG40 ... 125

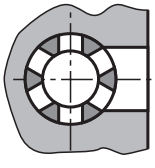

Bar on bore

1 Size 16
2 Size 25
3 Size 32
4 Size 40
5 Size 50
6 Size 63
7.1 Size 80, spool design "A"
7.2 Size 80, spool design "B"
8.1 Size 100, spool design "A"
8.2 Size 100, spool design "B"
9.1 Size 125, spool design "A"
9.2 Size 125, spool design "B"
10.1 Size 160, spool design "A"
10.2 Size 160, spool design "B"

Characteristic curves: without damping nose "E", B → A
(simulated with HLP46, ϑ_{Oil} = 40 ±5 °C)

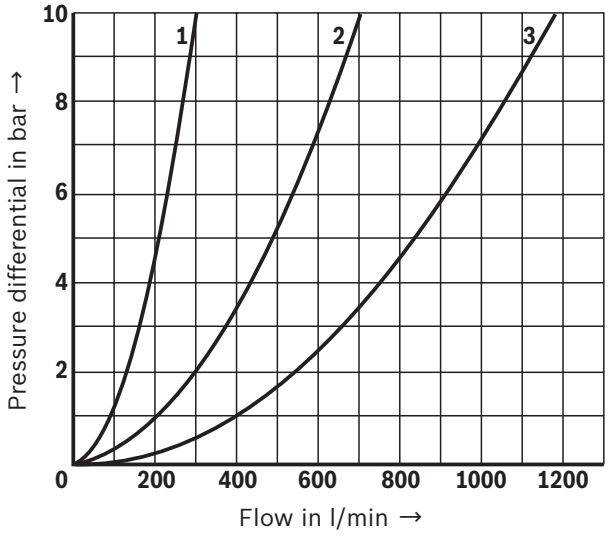

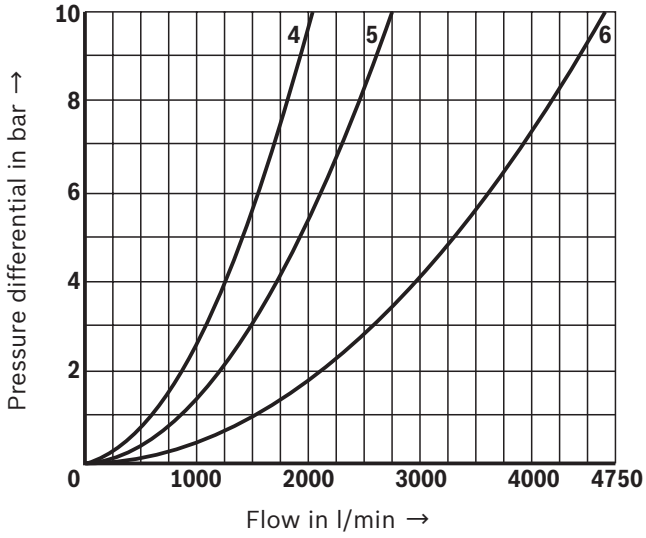

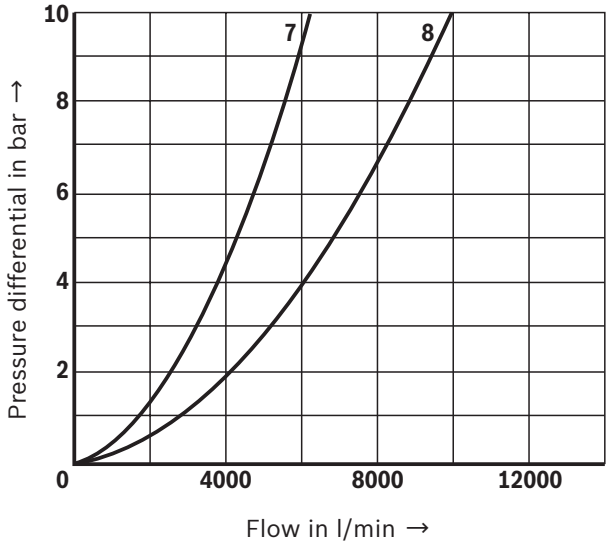

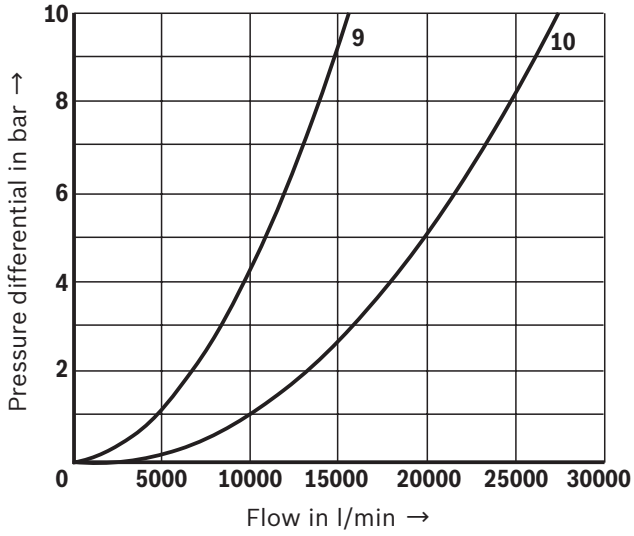

☞ **Notice:**
The specified characteristic curves were simulated with 100% spool stroke and an aligned socket (see sketch on page 10). The simulation results were validated by measurement results. The basis was an installation geometry with ØD3* (see installation bore page 4) and a simulation model according to ISO 4411/2008-10-01.

1 Size 16
2 Size 25
3 Size 32
4 Size 40
5 Size 50
6 Size 63
7 Size 80
8 Size 100
9 Size 125
10 Size 160

Characteristic curves: with damping nose "D", A → B
(simulated with HLP46, ϑ_{Oil} = 40 ±5 °C)

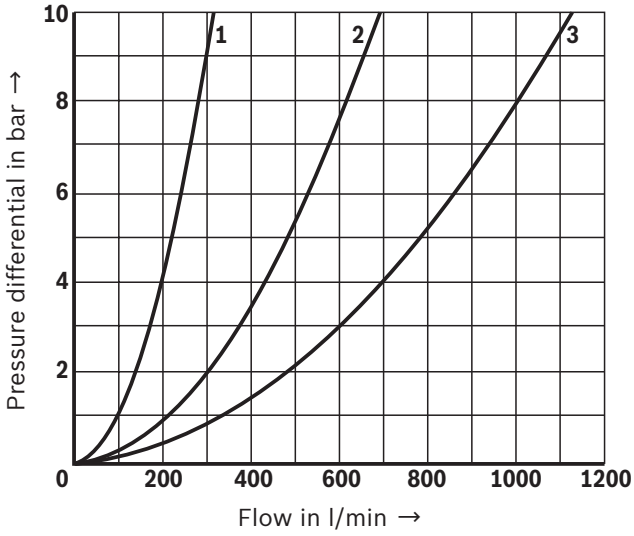

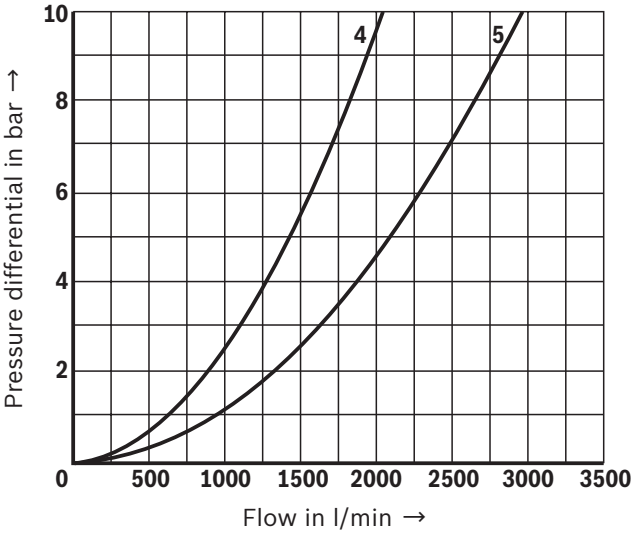

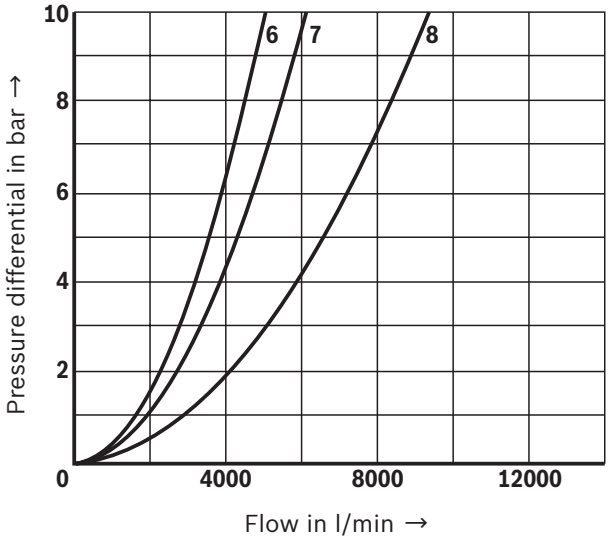

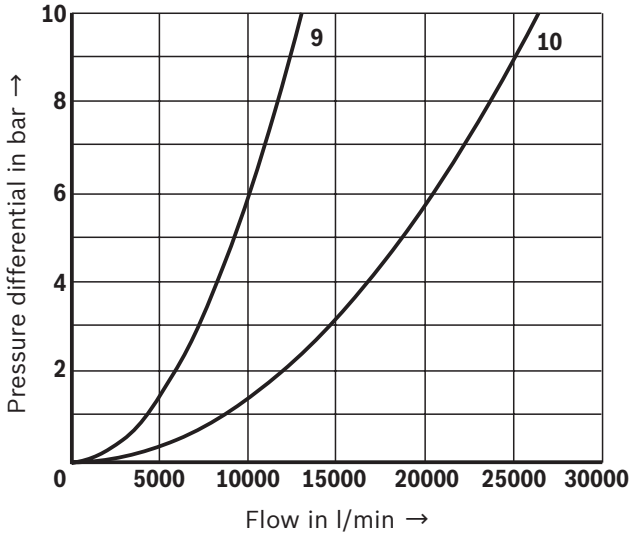

☞ **Notice:**
The specified characteristic curves were simulated with 100% spool stroke and an aligned socket (see sketch on page 10). The simulation results were validated by measurement results. The basis was an installation geometry with ØD3* (see installation bore page 4) and a simulation model according to ISO 4411/2008-10-01.

1 Size 16
2 Size 25
3 Size 32
4 Size 40
5 Size 50
6 Size 63
7 Size 80
8 Size 100
9 Size 125
10 Size 160

Characteristic curves: with damping nose "D", B → A
(simulated with HLP46, ϑ_{Oil} = 40 ±5 °C)

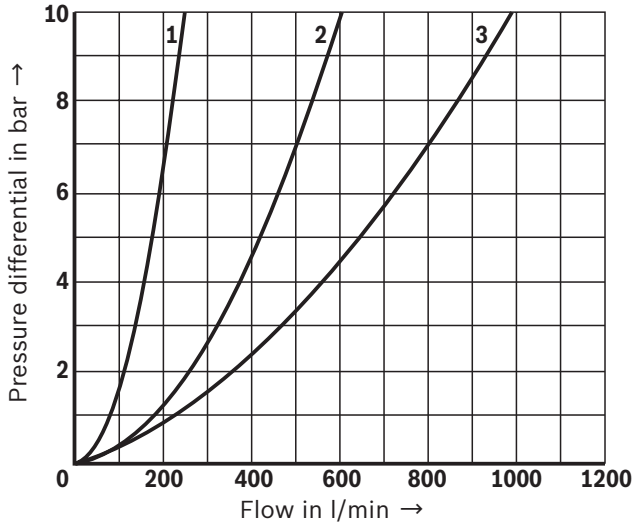

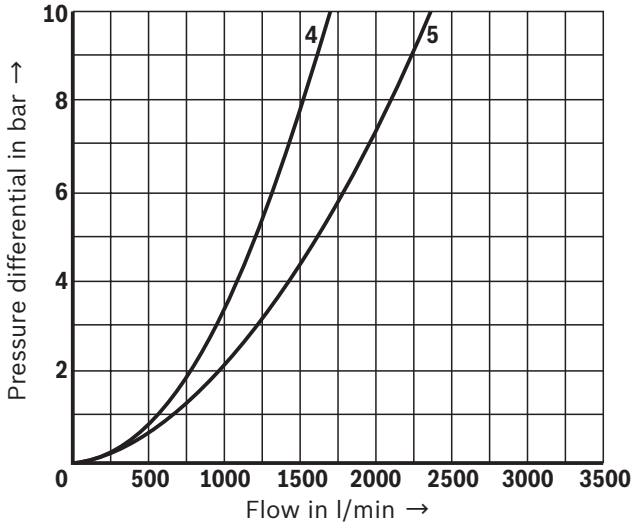

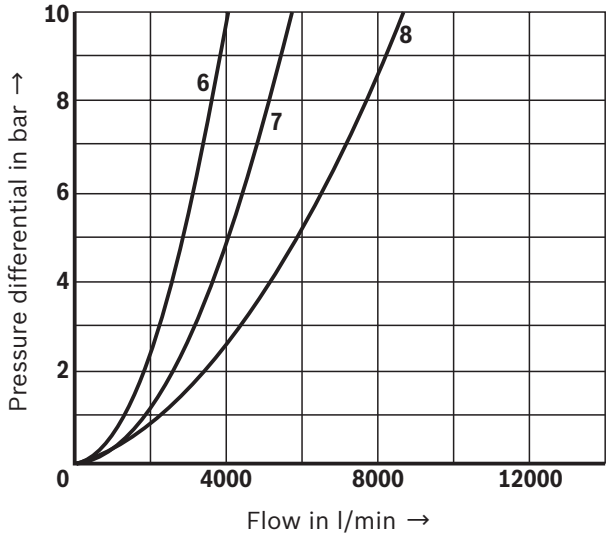

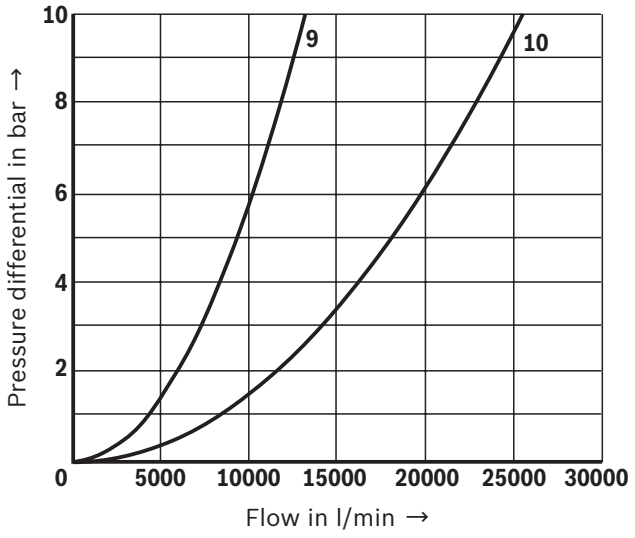

☞ **Notice:**
The specified characteristic curves were simulated with 100% spool stroke and an aligned socket (see sketch on page 10). The simulation results were validated by measurement results. The basis was an installation geometry with ØD3* (see installation bore page 4) and a simulation model according to ISO 4411/2008-10-01.

1 Size 16
2 Size 25
3 Size 32
4 Size 40
5 Size 50
6 Size 63
7 Size 80
8 Size 100
9 Size 125
10 Size 160

Ordering code: Control cover type LFA...

01	02	03		04		05	06	07	08	09	10	11	12	13	14	15
LFA			**–**		**/**											

01	Control cover	**LFA**

02	Size 16	**16**
	Size 25	**25**
	Size 32	**32**
	Size 40	**40**
	Size 50	**50**
	Size 63	**63**
	Size 80	**80**
	Size 100	**100**
	Size 125	**125**
	Size 160	**160**

Control cover types

03	Control cover with remote control port (NG16 ... 160)	**D**
	Control cover with stroke limitation (hand wheel) and remote control port (NG16 ... 63)	**H1**
	Control cover with stroke limitation (internal hexagon) and remote control port (NG16 ... 160)	**H2**
	Control cover with stroke limitation (rotary knob, lockable) and remote control port (NG16 ... 40)	**H3**
	Control cover with stroke limitation (rotary knob) and remote control port (NG16 ... 100)	**H4**
	Control cover with integrated shuttle valve (NG16 ... 100)	**G**
	Control cover with integrated pilot operated pilot control valve (directional seat valve) (NG25 ... 100)	**R**
	Control cover with integrated pilot operated pilot control valve (directional seat valve) (NG25 ... 100)	**RF**
	Control cover for set-up of a directional valve (NG16 ... 160)	**WEA**
	Control cover for set-up of a directional valve (NG16 ... 160)	**WEB**
	Control cover for set-up of a directional valve; additional control port (NG16 ... 125)	**WEMA**
	Control cover for set-up of a directional valve; additional control port (preferably "WEMA") (NG16 ... 100)	**WEMB**
	Control cover for set-up of a directional valve (check valve circuit) (NG16 ... 100)	**WECA**
	Control cover with shuttle valve and for set-up of a directional valve (NG16 ... 100)	**GWA**
	Control cover with shuttle valve and for set-up of a directional valve (preferably "GWA") (NG16 ... 100)	**GWB**
	Control cover with shuttle valve and for set-up of a directional valve; additional control port (NG16 ... 100)	**GWMA**
	Control cover with two check valves and for set-up of a directional valve; additional control port (NG16 ... 100) [1]	**GWMA20**
	Control cover with shuttle valve and for set-up of a directional valve (check valve circuit) (NG16 ... 100) [1]	**KWA**
	Control cover with shuttle valve and for set-up of a directional valve (check valve circuit) (NG16 ... 100) [1]	**KWB**
	Control cover with shuttle valve and for set-up of a directional valve; additional control port (NG16 ... 100)	**KWMA**
	Control cover for set-up of a directional valve with stroke limitation (NG16 ... 63) [1]	**HWMA**
	Control cover for set-up of a directional valve with stroke limitation (NG16 ... 63) [1]	**HWMB**

04	Component series 70 ... 79 (70 ... 79: unchanged installation and connection dimensions) (NG16 ... 63)	**7X**
	Component series 60 ... 69 (60 ... 69: unchanged installation and connection dimensions) (NG80 ... 100)	**6X**
	Component series 20 ... 29 (20 ... 29: unchanged installation and connection dimensions) (NG125 ... 160)	**2X**

Remote control port

05	For more detailed information, please refer to the pages of the individual control cover variants	

Orifices

06 ... 12	For more detailed information, please refer to the pages of the individual control cover variants and to page 95 (orifice characteristic curves).	

[1] Other sizes upon request

Ordering code: Control cover type LFA...

01	02	03		04		05	06	07	08	09	10	11	12	13	14	15
LFA			**–**		**/**											

Corrosion resistance

13	None	**no code**
	Improved corrosion protection (240 h salt spray test according to EN ISO 9227)	**J3**

Seal material

14	NBR seals	**no code**
	FKM seals	**V**
	Observe compatibility of seals with hydraulic fluid used. (Other seals upon request)	

Connections, mounting and plug screws

15	Mounting screws, metric; connections inch thread	**no code**
	Mounting screws UNC; connections UNF	**/12**

☞ **Notice:**
Additional functions with special numbers see from page 97.

Orifice symbol		Symbol in ordering code		
A**		**A****		This orifice is designed as screw-type orifice. If an orifice is to be installed, the respective code letter with the orifice Ø in 1/10mm has to be entered in the type designation. Example: **A12 =** orifice with Ø1.2 mm in channel A.
Ø1.2				This orifice is designed as bore. No specifications are made in the type designation. (Orifice Ø in mm)
Z12				This orifice is designed as screw-type orifice. This is a standard orifice. No specifications are made in the type designation. (Orifice Ø in 1/10 mm)

Pilot control valve (separate order)

Control cover		Pilot control valve	
Size	**Design**	**Size**	**Description**
16 ... 50	WE., WEM., WECA, GW., KW.	6	4/3-, 4/2-, 3/2-directional spool valve, direct operated (subplate mounting) 2/2-, 3/2-, 4/2 directional seat valve, direct operated (subplate mounting)
63 ... 100	WE., WEM., WECA, GW., KW.	10	
125	WE., WEMA, KW.	10, 16	
160	WE.	25	

☞ **Notice:**
- By combination of a 2-way cartridge valve with a pilot control valve, various valve functions can be realized. Possible pilot control valves according to ISO 4401 see selection table above.
- Mounting screws for pilot control valves are not included in the scope of delivery.

Symbols

Version "D" (NG16 ... 160)
Control cover with remote control port

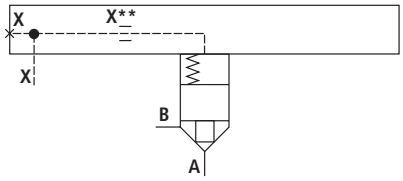

See page 18 and 19

Version "H." (NG16 ... 160)
Control cover with stroke limitation and remote control port

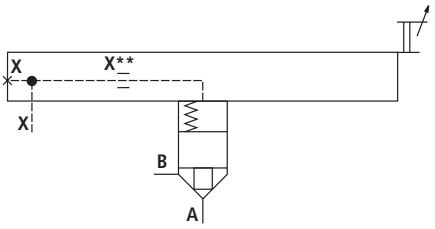

See page 20 ... 25

Version "G" (NG16 ... 100)
Control cover with integrated shuttle valve

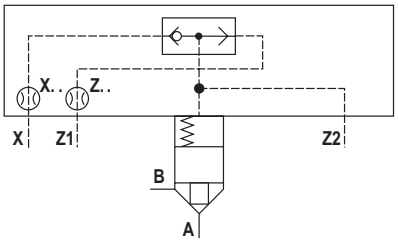

See page 26 ... 29

Version "R" (NG25 ... 100)
Control cover with integrated pilot operated pilot control valve (directional seat valve)

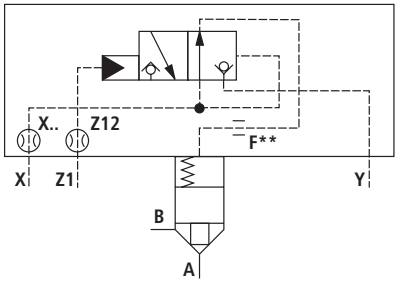

See page 30 ... 33

Version "WEA", **"WEB"** (NG16 ... 160)
Control cover for set-up of a directional valve

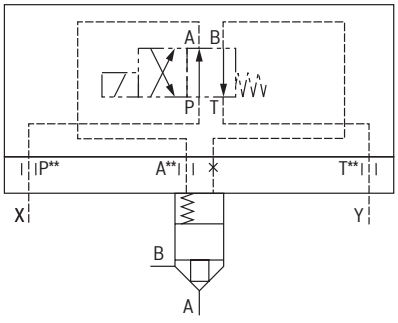

See page 34 ... 41

Version "WEMA", **"WEMB"** (NG16 ... 125)
Control cover for set-up of a directional valve; additional control port (preferably "WEMA")

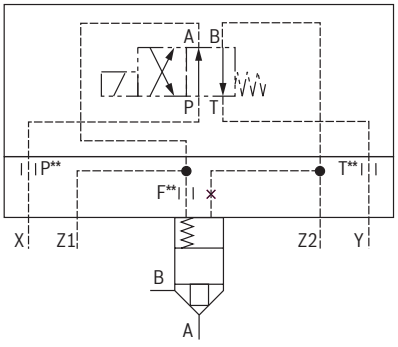

See page 42 ... 49

Version "WECA" (NG16 ... 100)
Control cover for set-up of a directional spool valve as check valve circuit

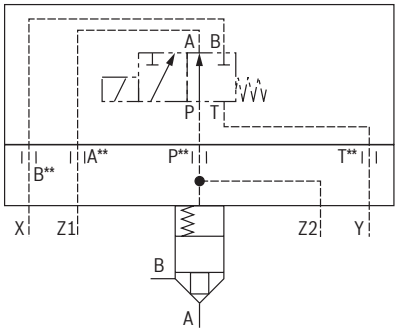

See page 50 ... 55

Version "GWA", "GWB" (NG16 ... 100)
Control cover for set-up of a directional spool or seat valve, with integrated shuttle valve

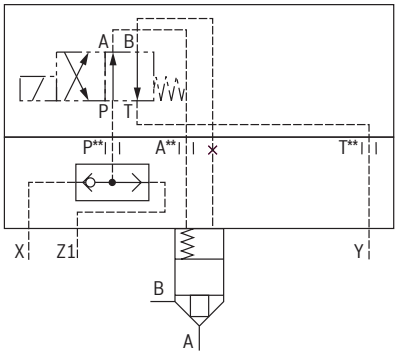

See page 56 ... 61

Version "GWMA" (NG16 ... 100)
Control cover with shuttle valve and for set-up of a directional valve; additional control port

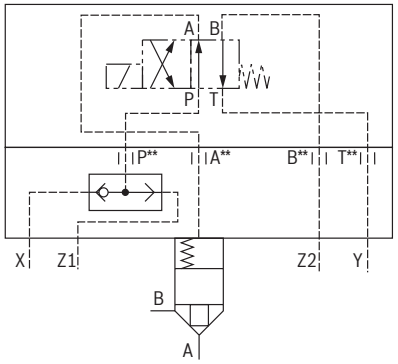

See page 62 ... 69

Symbols

Version "GWMA20" (NG16 ... 100)
Control cover with two check valves and for set-up of a directional valve; additional control port

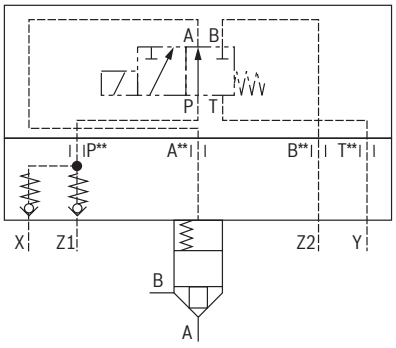

See page 70 ... 77

Version "KWA", **"KWB"** (NG16 ... 100)
Control cover with shuttle valve and for set-up of a directional valve (check valve circuit)

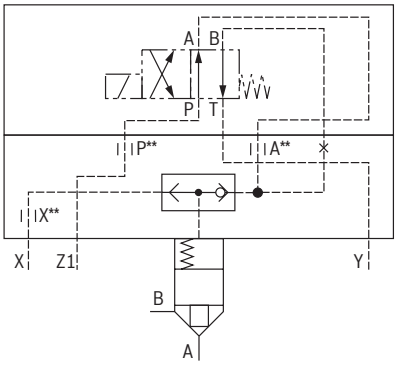

See page 78 ... 83

Version "KWMA" (NG16 ... 125)
Control cover with shuttle valve and for set-up of a directional valve; additional control port

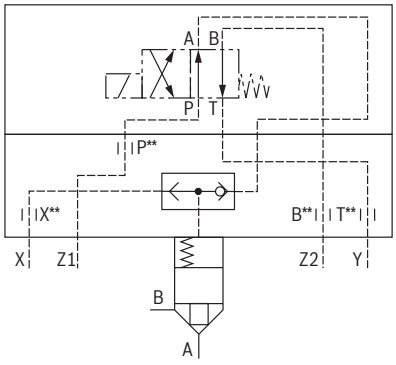

See page 84 ... 89

Version "HWMA", "HWMB" (NG16 ... 63)
Control cover for set-up of a directional valve with stroke limitation

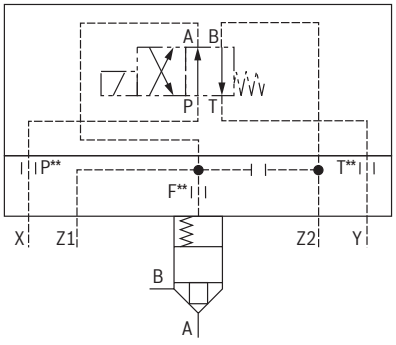

See page 90 ... 93

☞ **Notice:**
Basic symbols:
- ▶ Binding symbols in the following type descriptions
- ▶ Pilot control valves, see page 15, freely selectable

Control cover "D" with remote control port: NG16 ... 63 (dimensions in mm)

01	02	03		04		05	06	07	08	09	10	11	12	13	14	15
LFA		**D**	**–**	**7X**	**/**	**F**								**1)**	**1)**	**1)**

02						10
Size						**Orifice in the channel** (Ø in 1/10 mm)
16	**25**	**32**	**40**	**50**	**63**	**X**** ◿

05	With remote control port	**F**

◿ Orifice possible, if required, specifications have to be made

1) See "Ordering code for control cover type LFA..." page 14.

Type LFA . D.../F

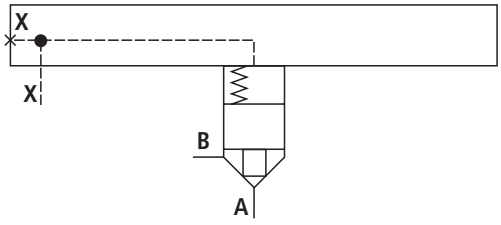

Type LFA . D.../FX**

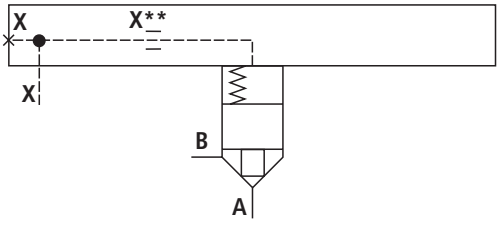

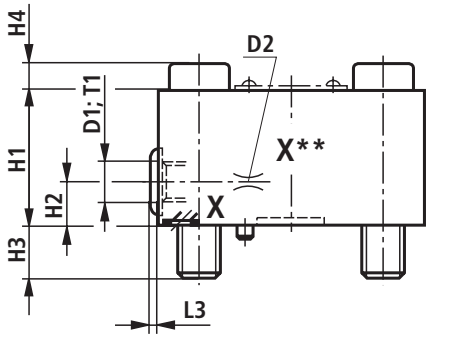

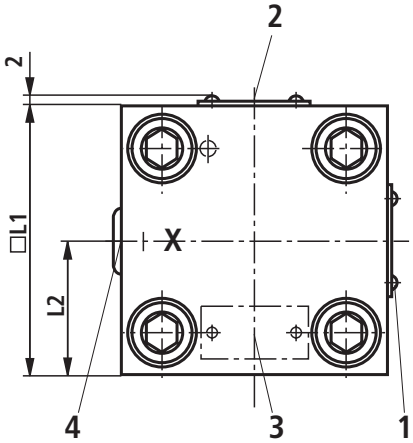

NG	16	25	32	40	50	63
D1	G1/8	G1/4	G1/4	G1/2	G1/2	G3/4
D2 2)	M6	M6	M6	M8 x 1	M8 x 1	G3/8
H1	27	30	35	60	68	82
H2	12	16	16	30	32	40
H3	15	24	28	32	34	50
H4	8	12	16	–	–	–
□ L1	65	85	100	125	140	180
L2	32.5	42.5	50	72	80	90
L3	4	5	5	5	5	5
T1	8	12	12	14	14	16

2) For ordering code of orifices, see page 95.

Mounting screws included within the scope of delivery (see also page 95).

1 Name plate at NG16, 25
2 Name plate at NG32
3 Name plate at NG40, 50, 63
4 Port X optionally as threaded port

☞ **Notice:**
The dimensions are nominal dimensions which are subject to tolerances.

Control cover "D" with remote control port: NG80 ... 160 (dimensions in mm)

01	02	03		04		05	06	07	08	09	10	11	12	13	14	15
LFA		**D**	**–**		**/**	**F**								**1)**	**1)**	**1)**

02				10
Size				**Orifice in the channel** (Ø in 1/10 mm)
80	**100**	**125**	**160**	**X**** ◿

04	Component series 60 ... 69 (60 ... 69: unchanged installation and connection dimensions) (NG80 ... 100)	**6X**
	Component series 20 ... 29 (20 ... 29: unchanged installation and connection dimensions) (NG125 ... 160)	**2X**

05	With remote control port	**F**

◿ Orifice possible, if required, specifications have to be made

1) See "Ordering code for control cover type LFA..." page 14.

Type LFA . D.../F

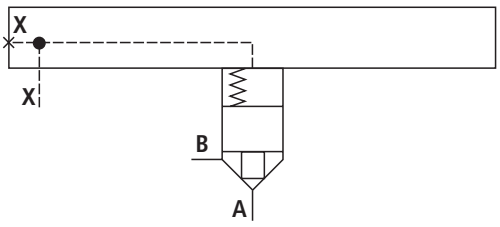

Type LFA . D.../FX**

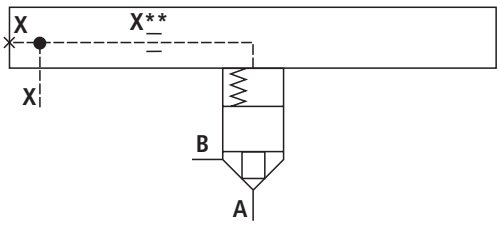

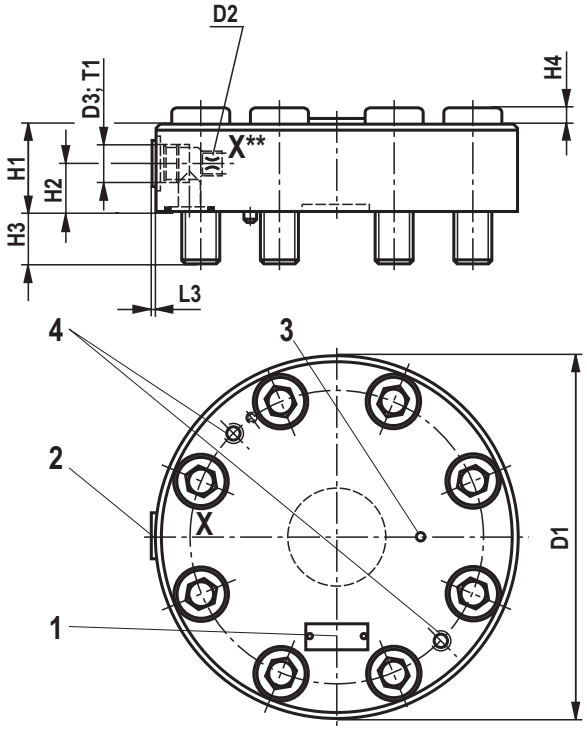

NG	80	100	125	160
D1	250	300	380	480
D2 2)	G3/8	G1/2	G1	G1
D3	G3/4	G1	G1 1/4	G1 1/4
H1	70	75	105	147
H2	35	40	50	70
H3	45	52.5	61	74
H4	–	24	31	42
L3	3	3	4	4
T1	16	18	20	20

2) For ordering code of orifices, see page 95.

Mounting screws included within the scope of delivery (see also page 95).

1 Name plate
2 Port X optionally as threaded port
3 Unloading bore from NG125
4 Disassembly and handling thread

☞ **Notice:**
The dimensions are nominal dimensions which are subject to tolerances.

Control cover "H." with stroke limitation and remote control port: NG16 ... 40

01	02	03	04		05	06	07	08	09	10	11	12	13	14	15
LFA			**–**	**7X**	**/**	**F**							**1)**	**1)**	**1)**

02				03	10
Size				**Type**	**Orifice in the channel** (Ø in 1/10 mm)
16	**25**	**32**	**40**	**H1**	**X****
				H2	
				H3	
				H4	

05	With remote control port	**F**

⊿ Orifice possible, if required, specifications have to be made

1) See "Ordering code for control cover type LFA..." page 14.

☞ **Notice:**
Up to NG32, control cover "H" can also be combined with pressure logic inserts type LC_DB_7X. From NG40, special covers type LFA...H.../FDR can be used (see page 97).

Type LFA . H.../F

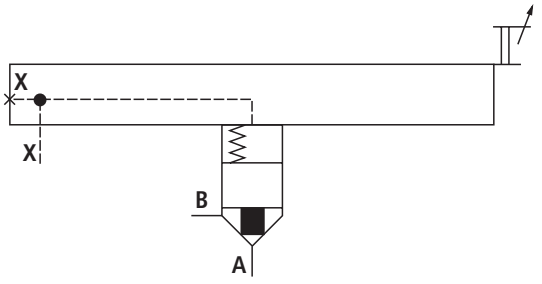

Type LFA . H.../FX**

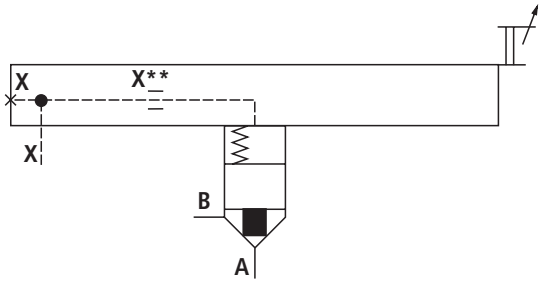

Control cover "H." with stroke limitation and remote control port: NG16 ... 40 (dimensions in mm)

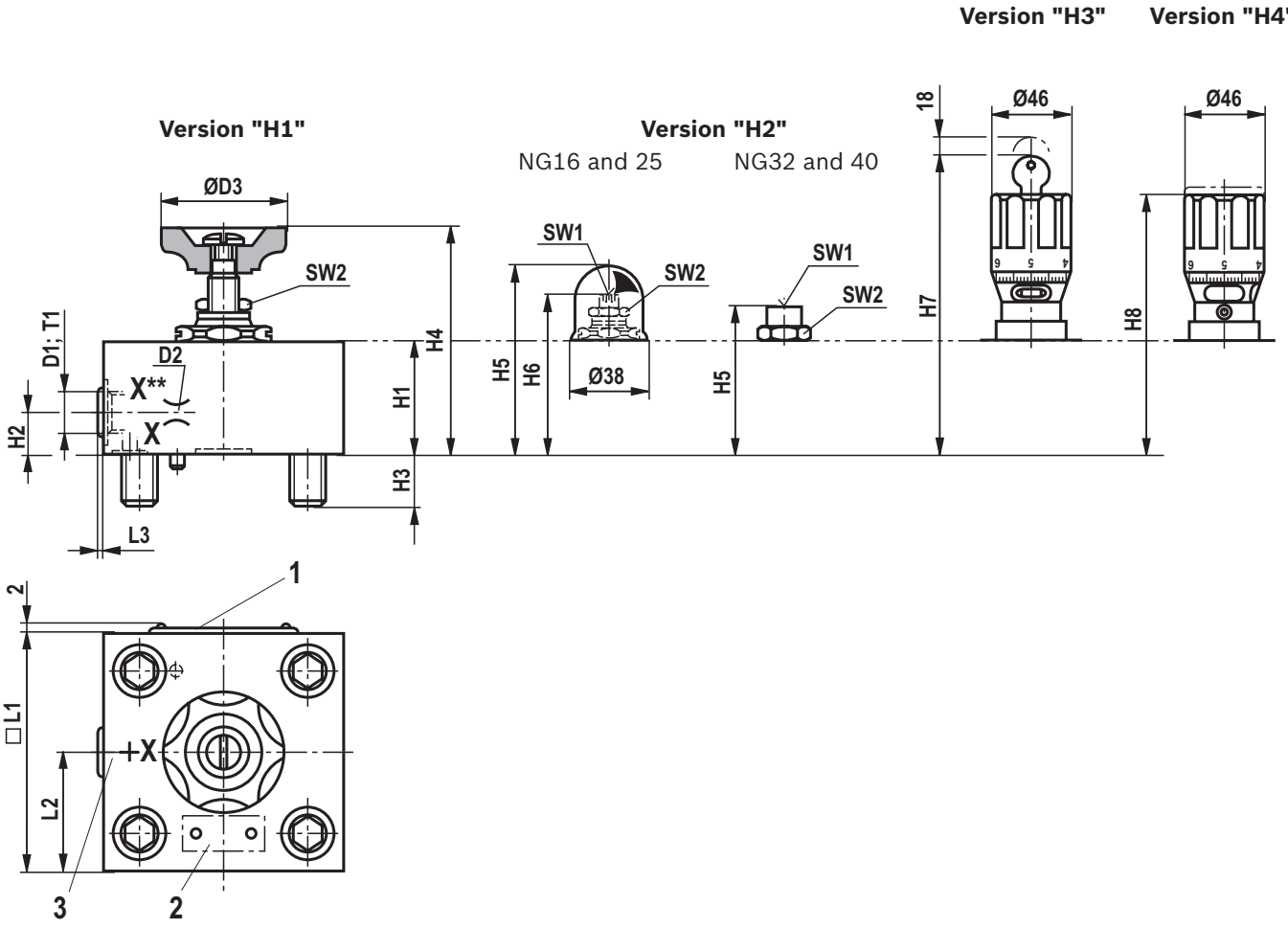

1 Name plate at NG16, 25, 32

2 Name plate at NG40

3 Port X optionally as threaded port

NG	16	25	32	40
D1	G1/8	G1/4	G1/4	G1/2
D2 [2]	M6	M6	M6	M8 x 1
ØD3	52	80	80	100
H1	35	40	75 (60 [4])	95 (100 [4])
H2	12	16	16	30
H3	15	24	28	32
H4 max	90	95	120	160
H5 max	76	80	100	146
H6 max	45	45	–	–
H7 max	155	160	180	234
H8 max	130	135	155	209
□ L1	65	85	100	125
L2	32.5	42.5	50	72
L3	4	5	5	5
T1	8	12	12	14
SW1 [3]	6	6	10	17
SW2	21	22	27	46

Mounting screws included within the scope of delivery (see also page 95).

☞ **Notice:**
The dimensions are nominal dimensions which are subject to tolerances.

[2] For ordering code of orifices, see page 95.

[3] Internal hexagon

[4] Dimensions () only apply to version "H3" and "H4"

Control cover "H." with stroke limitation and remote control port: NG50 and 63

01	02	03	04		05	06	07	08	09	10	11	12	13	14	15
LFA			**–**	**7X**	**/**	**F**							**1)**	**1)**	**1)**

02		03	10
Size		**Type**	**Orifice in the channel** (Ø in 1/10 mm)
50	**63**	**H1**	**X****
		H2	
		H4	

05	With remote control port	**F**

◿ Orifice possible, if required, specifications have to be made

1) See "Ordering code for control cover type LFA..." page 14.

Type LFA . H.../F

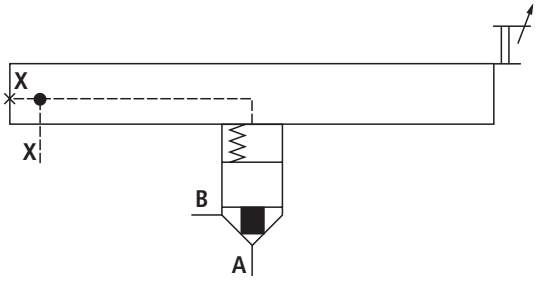

Type LFA . H.../FX**

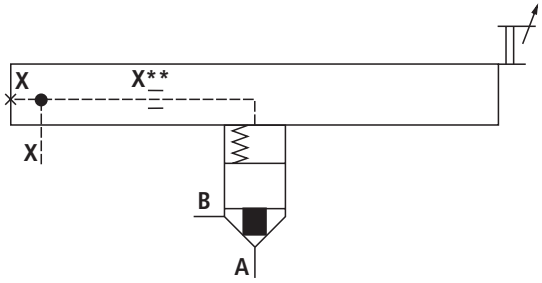

Control cover "H." with stroke limitation and remote control port: NG50 and 63
(dimensions in mm)

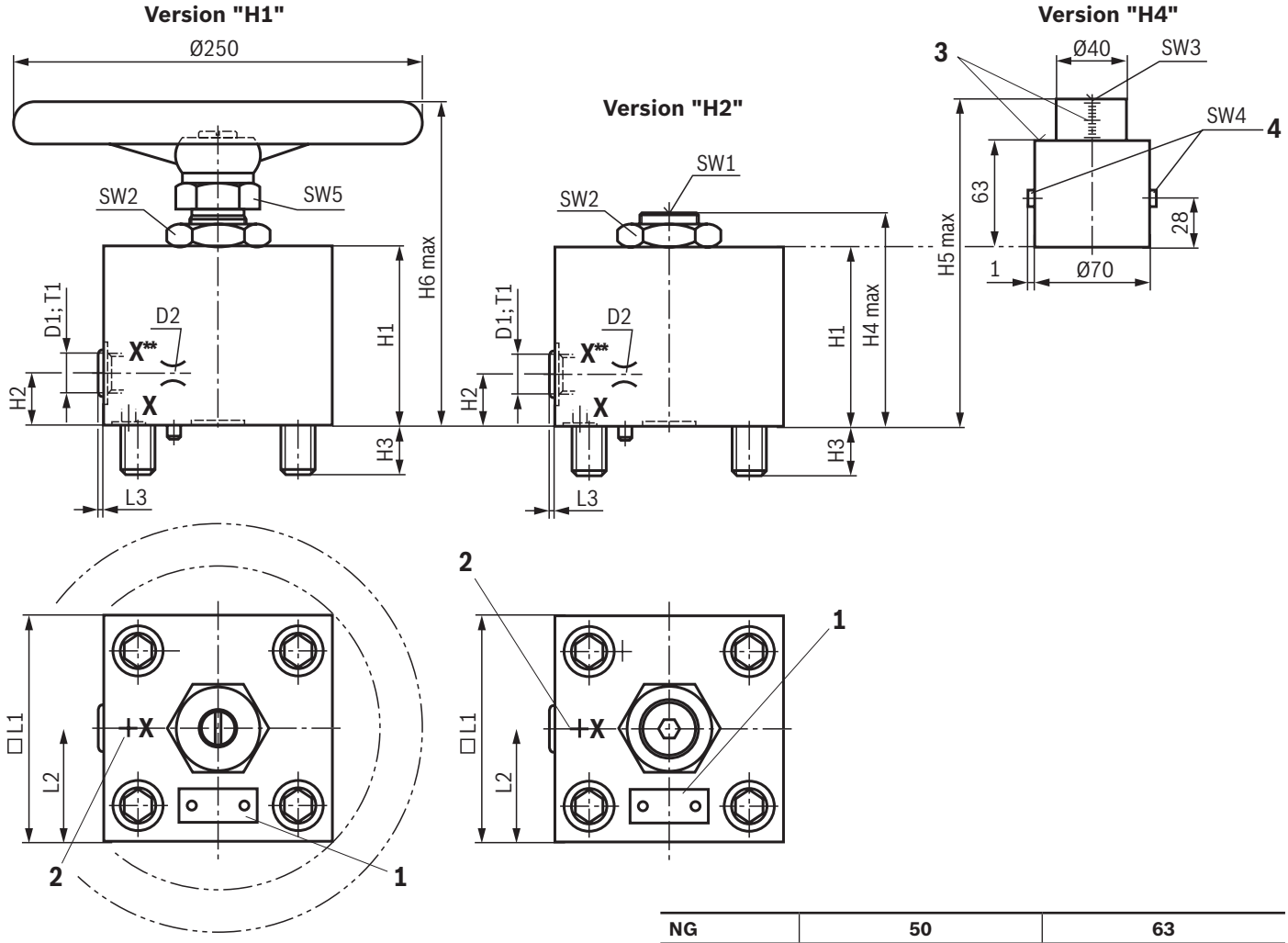

NG	50	63
D1	G1/2	G3/4
D2 [2]	M8 x 1	G3/8
H1	110	125
H2	32	40
H3	34	50
H4 max	156	175
H5 max	200	220
H6 max	230	250
□ L1	140	180
L2	80	90
L3	5	5
T1	14	16
SW1 [3]	17	22
SW2	55	65
SW3 [3]	19	19
SW4	5	5
SW5	46	55

1 Name plate
2 Port X optionally as threaded port
3 Scale
4 countered

Mounting screws included within the scope of delivery (see also page 95).

☞ **Notice:**
The dimensions are nominal dimensions which are subject to tolerances.

[2] For ordering code of orifices, see page 95.
[3] Internal hexagon

Control cover "H." with stroke limitation and remote control port: NG80 ... 160

01	02	03		04		05	06	07	08	09	10	11	12	13	14	15
LFA			**–**		**/**	**F**								**1)**	**1)**	**1)**

02				03	10
				Type	**Orifice in the channel** (Ø in 1/10 mm)
80	**100**	**125**	**160**	**H2**	**X**** ◿
				H4	

04	Component series 60 ... 69 (60 ... 69: unchanged installation and connection dimensions) (NG80 and 100)	**6X**
	Component series 20 ... 29 (20 ... 29: unchanged installation and connection dimensions) (NG125 and 160)	**2X**

05	With remote control port	**F**

◿ Orifice possible, if required, specifications have to be made

1) See "Ordering code for control cover type LFA..." page 14.

Type LFA . H.../F

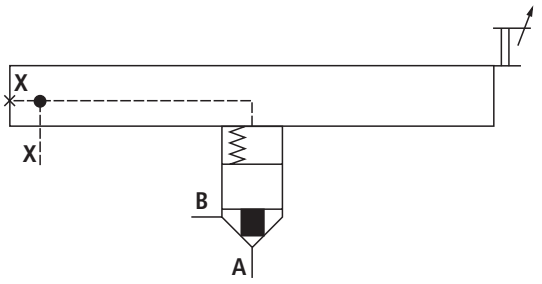

Type LFA . H.../FX**

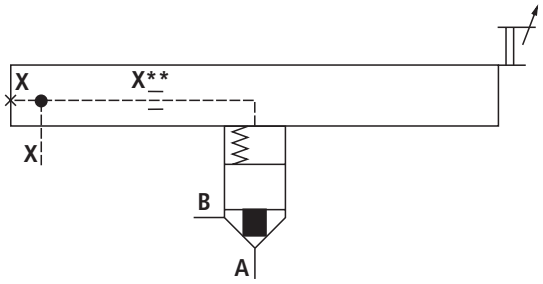

Control cover "H." with stroke limitation and remote control port: NG80 ... 160
(dimensions in mm)

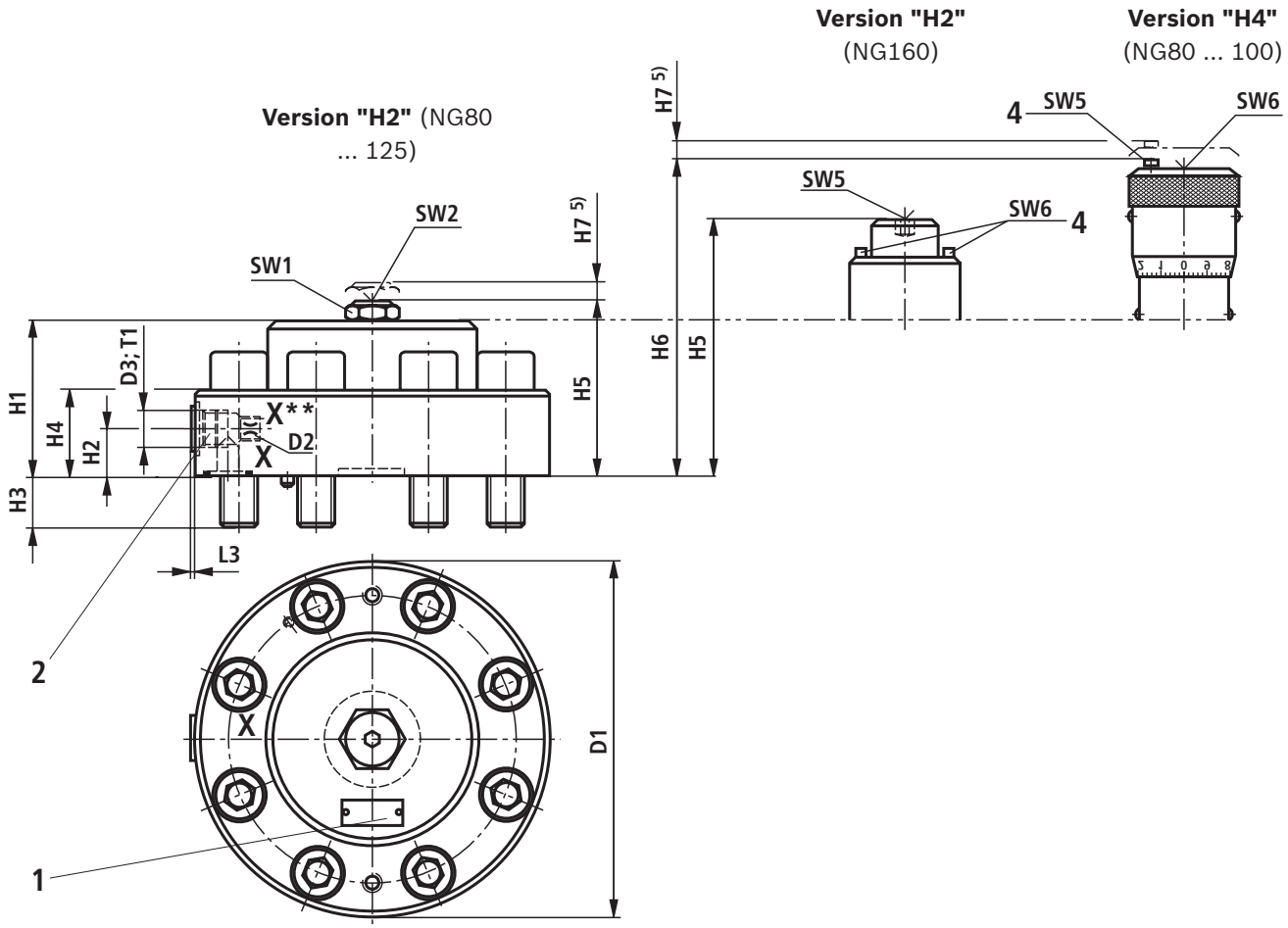

1 Name plate
2 Port X optionally as threaded port
3 Scale
4 countered

NG	80	100	125	160
D1	250	300	380	480
D2	G3/8	G1/2	G1	G1
D3 2)	G3/4	G1	G1 1/4	G1 1/4
L3	3	3	4	4
H1	114	132	170	225
H2	35 (24 4))	35	50	70
H3	45	52.5	61	74
H4	76	88.5	100	147
H5	137	157	195	340
H6	229	247	–	–
H7	30	38	–	–
T1	16	18	20	20
SW1	75	75	95	–
SW2 3)	24	27	27	–
SW3 3)	–	–	–	32
SW4 3)	–	–	–	8
SW5 3)	5	5	5	–
SW6 3)	14	14	14	–

Mounting screws included within the scope of delivery (see also page 95).

☞ **Notice:**
The dimensions are nominal dimensions which are subject to tolerances.

2) For ordering code of orifices, see page 95.
3) Internal hexagon
4) Dimension () only applies to version "H4"
5) Maximum dimension

Control cover "G" with integrated shuttle valve: NG16 ... 63

01	02	03		04		05	06	07	08	09	10	11	12	13	14	15
LFA			**–**	**7X**	**/**									**1)**	**1)**	**1)**

02	10	12
Size	**Orifice in the channel**	
	X	**Z1**
16	Ø1.2 ◢	Ø1.2 ◢
25	Ø1.5 ◢	Ø1.5 ◢
32	Ø2.0 ◢	Ø2.0 ◢
40	X15 ◿	Z15 ◿
50	X18 ◿	Z18 ◿
63	X20 ◿	Z20 ◿

◢ Orifice bored (Ø in mm) (does not appear in the type designation)
◿ Standard orifice (Ø in 1/10 mm) (does not appear in the type designation)
1) See "Ordering code for control cover type LFA..." page 14.

Type LFA . G... (NG16 ... 32)

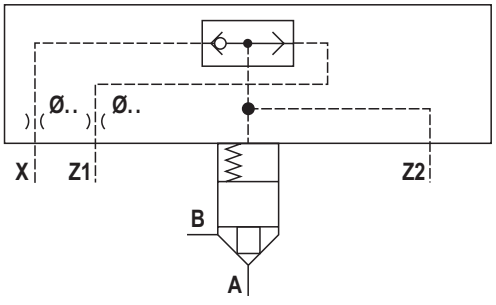

Type LFA . G... (NG40)

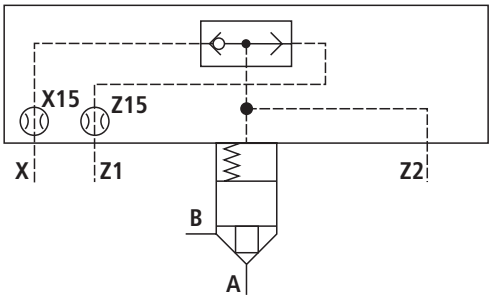

Type LFA . G... (NG50 ... 63)

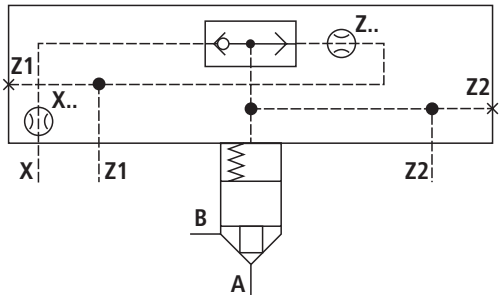

Control cover "G" with integrated shuttle valve: NG16 ... 63 (dimensions in mm)

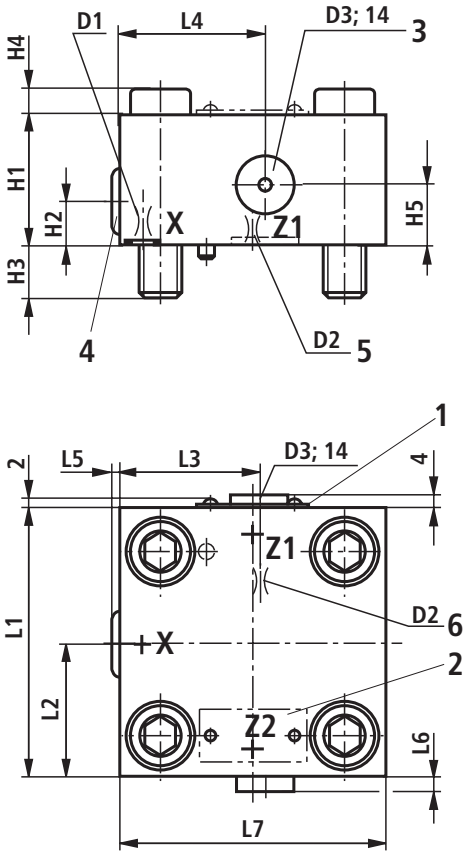

1 Name plate at NG16, 25, 32
2 Name plate at NG40, 50, 63
3 Ports Z1 and Z2 optionally as threaded ports at NG50 and 63
4 Shuttle valve
5 D2 at NG16 ... 40
6 D2 at NG50 and 63

NG	16	25	32	40	50	63
D1 [2)]	Ø1.2	Ø1.5	Ø2.0	M6	M8 x 1	M8 x 1
D2 [2)]	Ø1.2	Ø1.5	Ø2.0	M6	M8 x 1	M8 x 1
D3	–	–	–	–	G1/2	G1/2
H1	35	30	35	60	68	82
H2	17	17	21.5	30	32	42
H3	15	24	28	32	34	50
H4	–	12	16	–	–	–
H5	–	–	–	–	32	40
L1	65	85	100	125	140	180
L2	36.5	45.5	50	62.5	74	90
L3	–	–	–	–	72	81
L4	–	–	–	–	72	90
L5	4.5	4	1	–	6	4
L6	4	4	4	4	6	6
L7	65	85	100	125	140	180

[2)] For ordering code of orifices. see page 95.

Mounting screws included within the scope of delivery (see also page 95).

☞ **Notice:**
The dimensions are nominal dimensions which are subject to tolerances.

Control cover "G" with integrated shuttle valve: NG80 ... 100

01	02	03		04		05	06	07	08	09	10	11	12	13	14	15
LFA			**–**	**6X**	**/**									**1)**	**1)**	**1)**

02	10	11	12
Size	**Orifice in the channel** (Ø in 1/10 mm)		
	X	**F**	**Z1**
80	X20 ◿	F** ◿	Z20 ◿
100	X20 ◿	F** ◿	Z20 ◿

◿ Orifice possible, if required, specifications have to be made
◿ Standard orifice (does not appear in the type designation)
1) See "Ordering code for control cover type LFA..." page 14.
For ordering code of orifices, see page 95.

Type LFA . G... (NG80 ... 100)

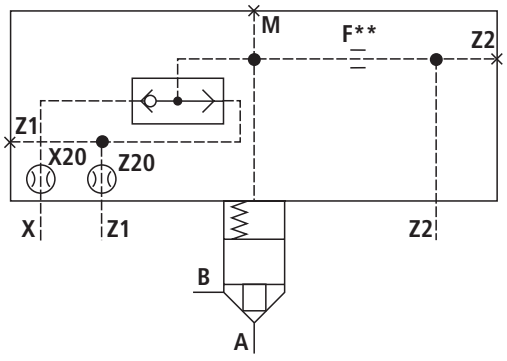

Control cover "G" with integrated shuttle valve: NG80 ... 100
(dimensions in mm)

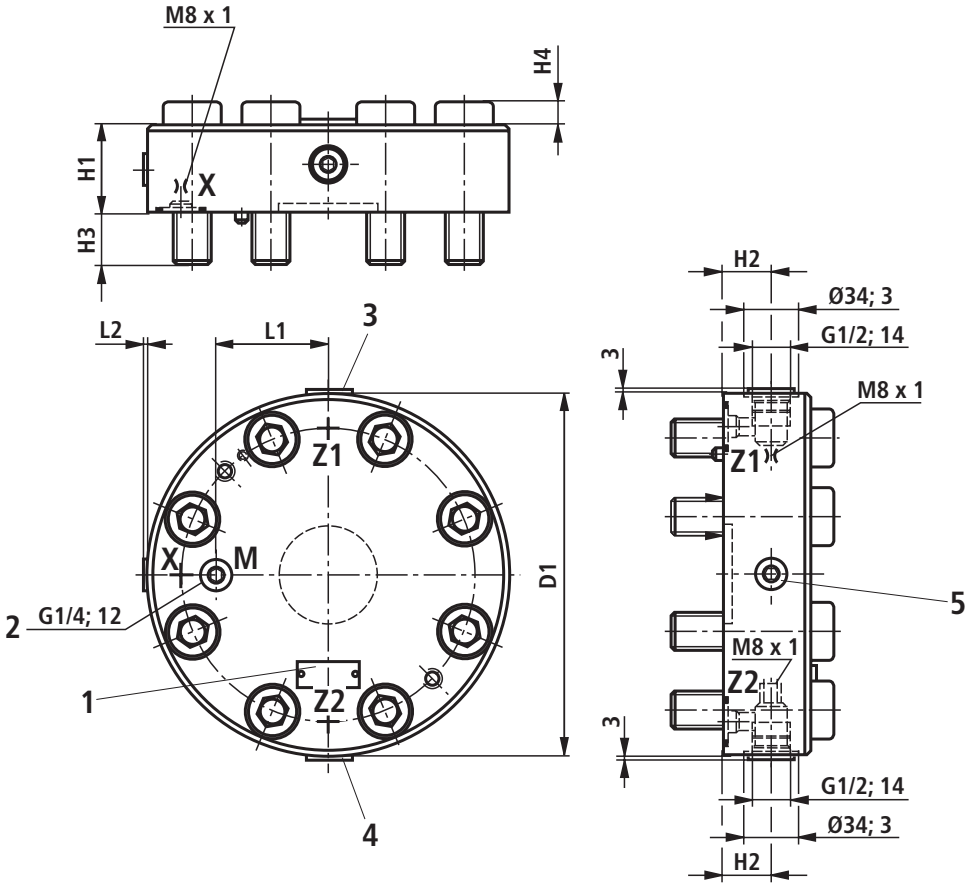

1 Name plate
2 Measuring port
3 Port Z1 optionally as threaded port
4 Port Z2 optionally as threaded port
5 Shuttle valve

NG	80	100
D1	250	300
H1	80	75
H2	45	43
H3	45	52.5
H4	1	23.5
L1	73	96.5
L2	1	–

Mounting screws included within the scope of delivery
(see also page 95).

☞ **Notice:**
The dimensions are nominal dimensions which are subject to tolerances.

Control cover "R" and "RF" with integrated directional seat valve: NG25 ... 63

01	02	03	04		05	06	07	08	09	10	11	12	13	14	15
LFA			**–**	**7X**	**/**								**1)**	**1)**	**1)**

02	03	10	11	12
Size	**Type**	**Orifice in the channel** (Ø in 1/10 mm)		
		X	**F**	**Z1**
25	**R, RF** [2; 3]	X10 ◿	F** ◿	Z12 ◿
32		X12 ◿	F** ◿	Z12 ◿
40		X15 ◿	F** ◿	Z12 ◿
50		X15 ◿	F** ◿	Z12 ◿
63		X18 ◿	F** ◿	Z12 ◿

Area ratio: $\frac{A_{Z1}}{A_X} = \frac{3}{1}$

◿ Orifice possible, if required, specifications have to be made
◿ Standard orifice (does not appear in the type designation)
1) See "Ordering code for control cover type LFA..." page 14.
2) Directional seat valve with spring return
3) Special version "R3" and "RF3", see page 99.

Type LFA . R... (NG25 ... 50)

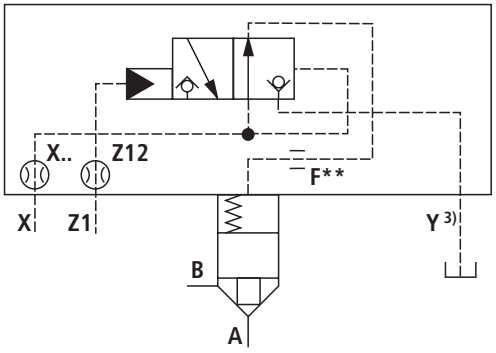

Type LFA 63 R... (NG63)

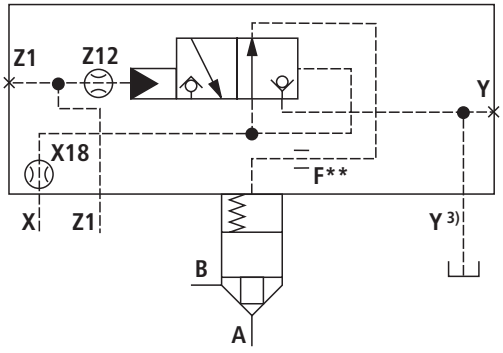

LFA . RF... (NG25 ... 50)

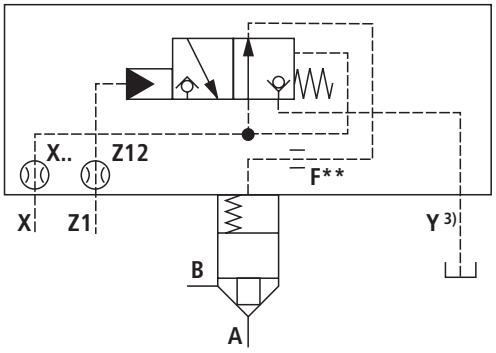

Type LFA 63 RF... (NG63)

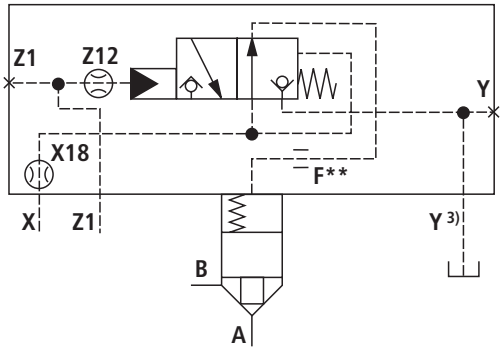

3) Maximum pressure at port Y 5 bar

Control cover "R" and "RF" with integrated directional seat valve: NG25 ... 63
(dimensions in mm)

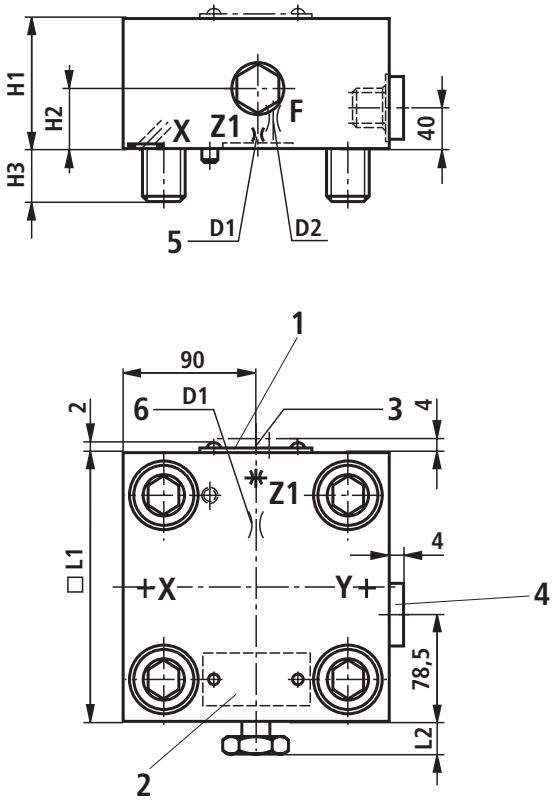

1 Name plate at NG16, 25, 32
2 Name plate at NG40, 50, 63
3 Port Z1 optionally as threaded port at NG63 (G1/4; 12)
4 Port Y optionally as threaded port at NG63 (G1/2; 14)
5 D1 at NG16 ... 50
6 D1 at NG63

NG	Type	25	32	40	50	63
D1 [4]	R, RF	M6	M6	M8 x 1	M8 x 1	M8 x 1
D2 [4]		M6	M6	M8 x 1	M8 x 1	M8 x 1
H1		40	50	60	68	82
H2		20	26	33	32	40
H3		24	28	32	34	50
□ L1		85	100	125	140	180
L2	**R**	2	1	4	3	–
	RF	18.5	17.5	25	24	16

[4] For ordering code of orifices, see page 95.

Mounting screws included within the scope of delivery (see also page 95).

☞ **Notice:**
The dimensions are nominal dimensions which are subject to tolerances.

Control cover "R" and "RF" with integrated directional seat valve: NG80 ... 100

01	02	03		04		05	06	07	08	09	10	11	12	13	14	15
LFA			**–**	**6X**	**/**									**1)**	**1)**	**1)**

02	03	10	11	12
Size	**Type**	**Orifice in the channel** (Ø in 1/10 mm)		
		X	**F**	**Z1**
80	**R, RF** [2]	X20 ◿	F** ◿	Z12 ◿
100		X25 ◿	F** ◿	Z12 ◿

Area ratio: $\frac{A_{Z1}}{A_X} = \frac{3}{1}$

◿ Orifice possible, if required, specifications have to be made
◿ Standard orifice (does not appear in the type designation)
1) See "Ordering code for control cover type LFA..." page 14.
2) Directional seat valve with spring return

Type LFA . R...

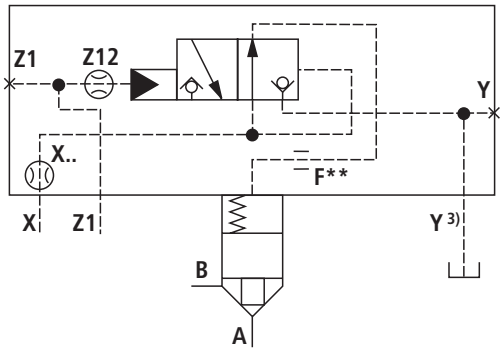

Type LFA . RF...

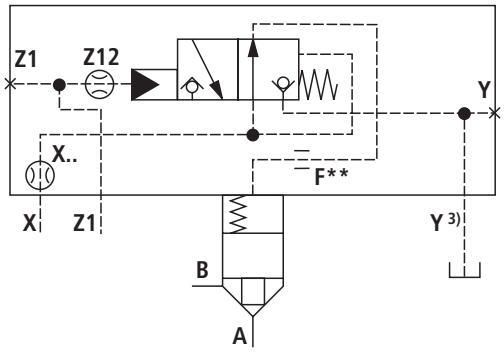

3) Maximum pressure at port Y 5 bar

Control cover "R" and "RF" with integrated directional seat valve: NG80 ... 100
(dimensions in mm)

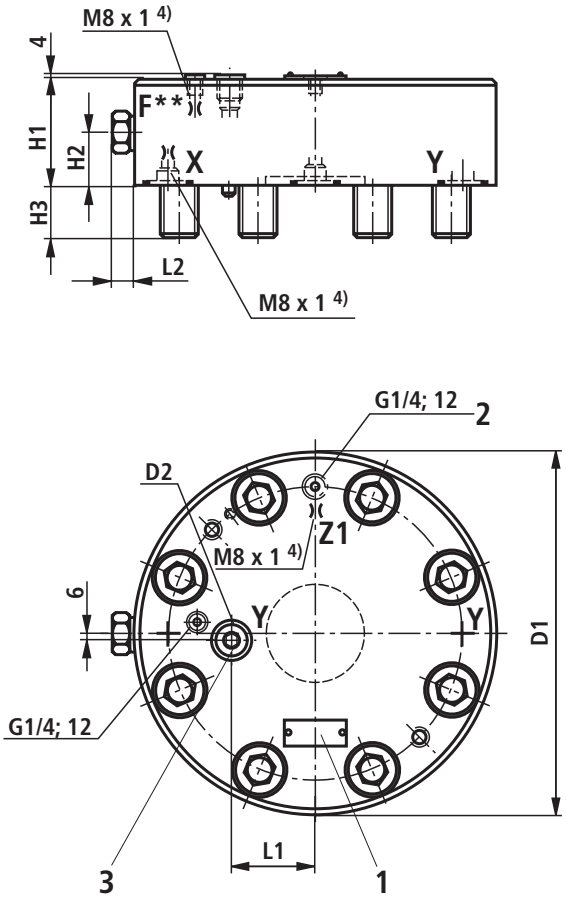

1 Name plate
2 Port Z1 optionally as threaded port
3 Port Y optionally as threaded port

NG	80	100
D1	250	300
D2	G1/4; 12	G1/2; 14
H1	80	100
H2	36	45
H3	45	52
L1	52	74
L2	21	18
L3	6	5

4) For ordering code of orifices, see page 95.

Mounting screws included within the scope of delivery (see also page 95).

☞ **Notice:**
The dimensions are nominal dimensions which are subject to tolerances.

Control cover "WEA" and "WEB" for set-up of a directional valve: NG16 ... 50

01	02	03		04		05	06	07	08	09	10	11	12	13	14	15
LFA			**–**	**7X**	**/**									**1)**	**1)**	**1)**

02					03	06	07	08	09
Size					**Type**	**Orifice in the channel** (Ø in 1/10 mm)			
						A	**B**	**P**	**T**
16	**25**	**32**	**40**	**50**	**WEA**	A** ◿		P** ◿	T** ◿
					WEB		B** ◿	P** ◿	T** ◿

◿ Orifice possible, if required, specifications have to be made

1) See "Ordering code for control cover type LFA..." page 14.

For ordering code of orifices, see page 95.

LFA . WEA... (NG16 ... 32)

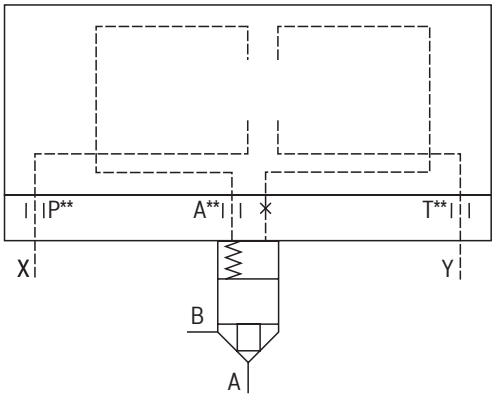

LFA . WEB... (NG16 ... 32)

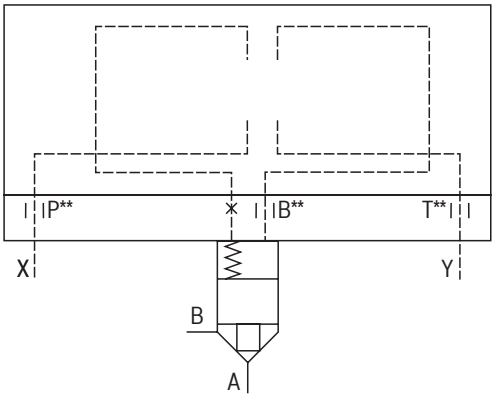

LFA . WEA... (NG40 and 50)

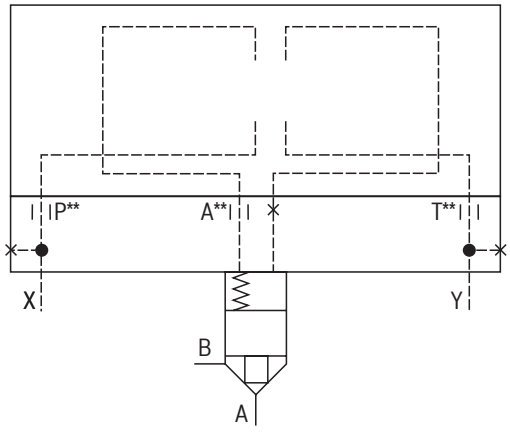

LFA . WEB... NG40 and 50

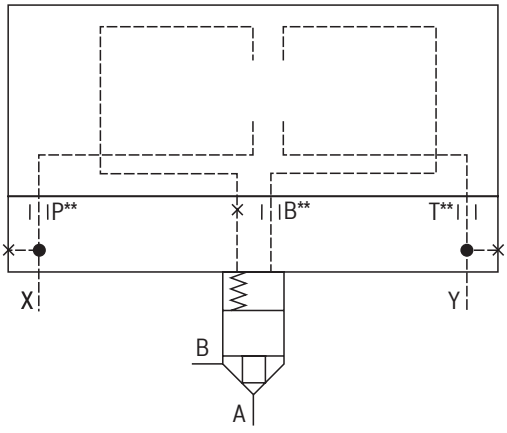

Control cover "WEA" and "WEB" for set-up of a directional valve: NG16 ... 50
(dimensions in mm)

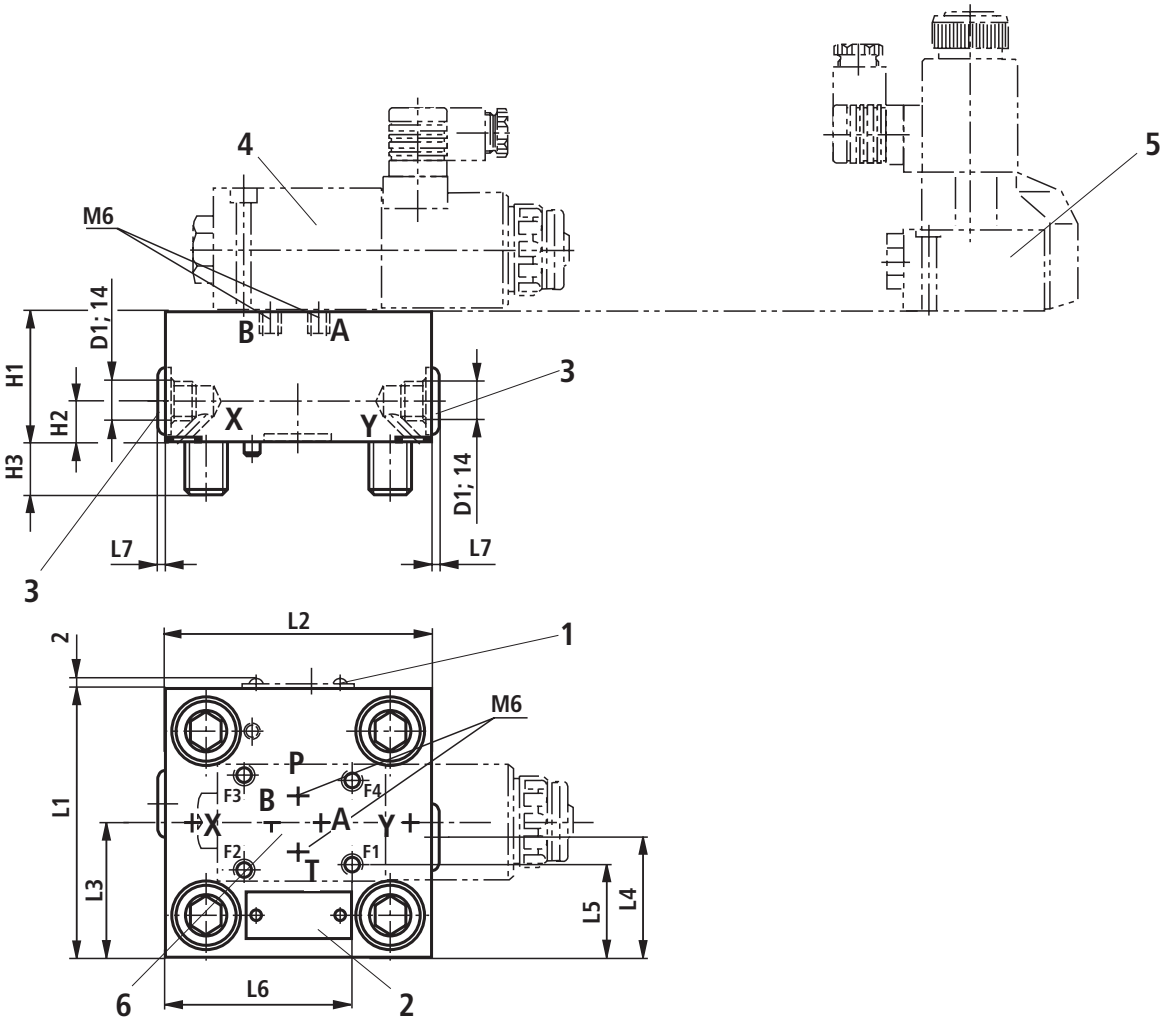

1 Name plate at NG16, 25, 32
2 Name plate at NG40 and 50
3 Port X and Y optionally as threaded ports at NG40 and 50
4 Directional spool valve type 4WE 6 D... (pilot control valve), separate order, see page 15
5 Directional seat valve type M-3SEW 6 ... (pilot control valve), separate order, see page 15
6 Porting pattern according to ISO 4401-03-02-0-05 (mounting thread for version "/12" see data sheet 08936)

NG	16	25	32	40	50
D1	–	–	–	G1/2	G1/2
H1	40	40	50	60	68
H2	–	–	–	30	32
H3	15	24	28	32	34
L1	65	85	100	125	140
L2	80	85	100	125	140
L3	–	–	–	72	80
L4	–	–	–	53	60
L5	17	27	34.5	47	54.5
L6	47.5	64	71.5	84	91.5
L7	4	4	4	6	6

☞ **Notice:**
The dimensions are nominal dimensions which are subject to tolerances.

Control cover "WEA" and "WEB" for set-up of a directional valve: NG63

01	02	03		04		05	06	07	08	09	10	11	12	13	14	15
LFA	**63**		**–**	**7X**	**/**									**1)**	**1)**	**1)**

03	06	07	08	09
Type	**Orifice in the channel** (Ø in 1/10 mm)			
	A	**B**	**P**	**T**
WEA	A** ◿		P** ◿	T** ◿
WEB		B** ◿	P** ◿	T** ◿

◿ Orifice possible, if required, specifications have to be made

1) See "Ordering code for control cover type LFA..." page 14.

For ordering code of orifices, see page 95.

LFA 63 WEA...

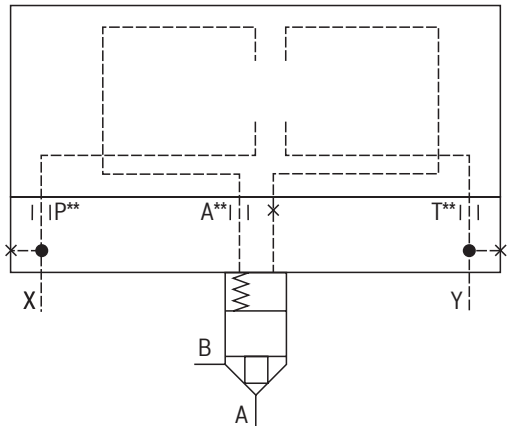

LFA 63 WEB...

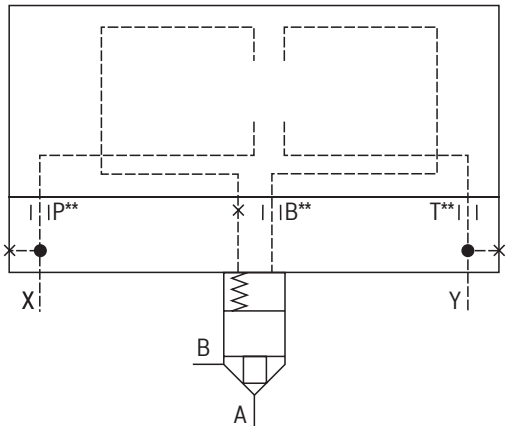

Control cover "WEA" and "WEB" for set-up of a directional valve: NG63
(dimensions in mm)

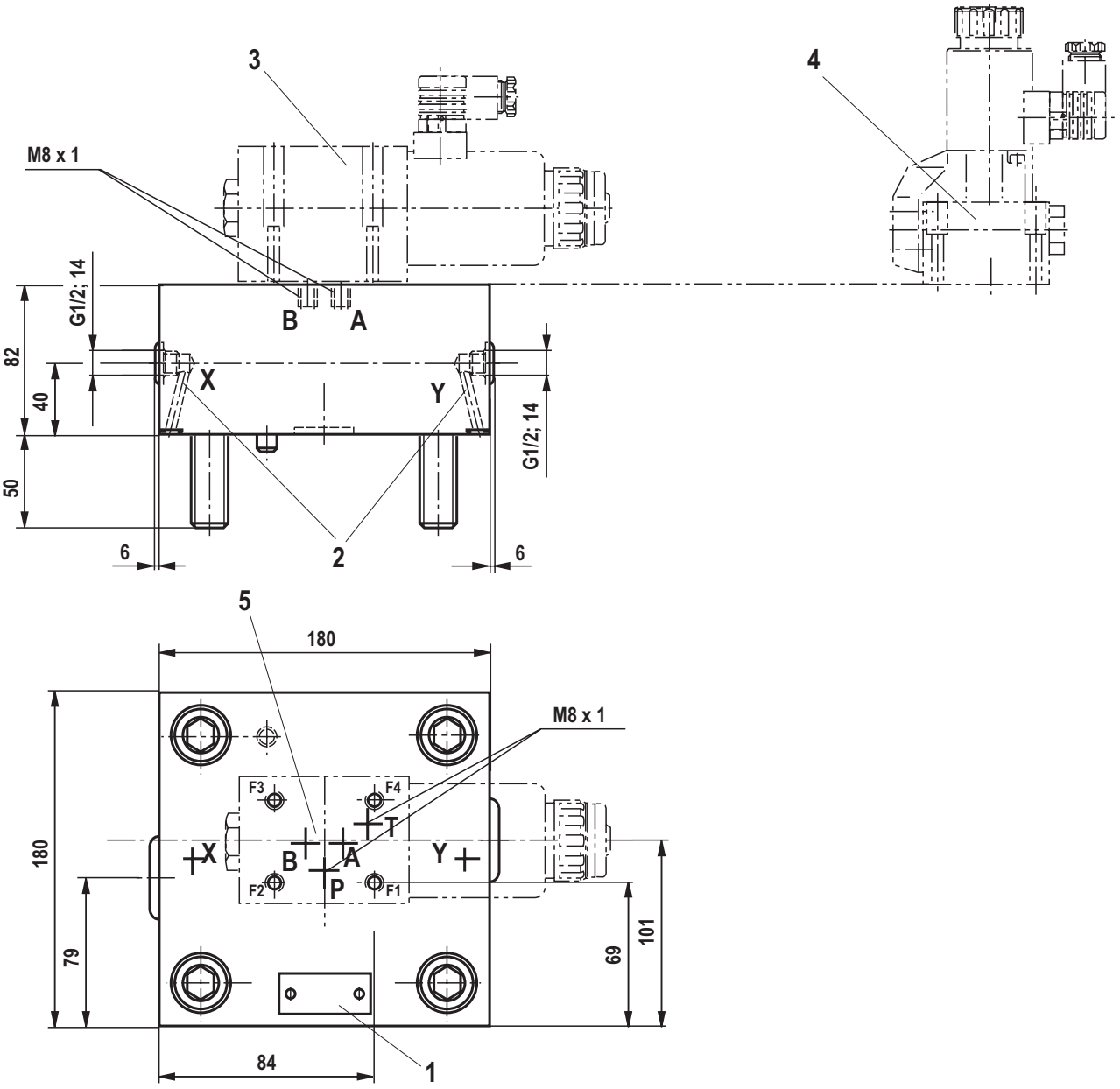

1 Name plate

2 Port X and Y optionally as threaded ports

3 Directional spool valve type 4WE 10 D... (pilot control valve), separate order, see page 15

4 Directional seat valve type M-3SEW 10 ... (pilot control valve), separate order, see page 15

5 Porting pattern according to ISO 4401-05-04-0-05
(mounting thread for version "/12" see data sheet 08936)

☞ **Notice:**
The dimensions are nominal dimensions which are subject to tolerances.

Control cover "WEA" and "WEB" for set-up of a directional valve: NG80 ... 100

01	02	03	04		05	06	07	08	09	10	11	12	13	14	15
LFA			**–**	**6X**	**/**								**1)**	**1)**	**1)**

02		03	06	07	08	09
Size		**Type**	**Orifice in the channel** (Ø in 1/10 mm)			
			A	**B**	**P**	**T**
80	**100**	**WEA**	A** ◿		P** ◿	T** ◿
		WEB		B** ◿	P** ◿	T** ◿

◿ Orifice possible, if required, specifications have to be made

1) See "Ordering code for control cover type LFA..." page 14.

For ordering code of orifices, see page 95.

LFA . WEA... (NG80 ... 100)

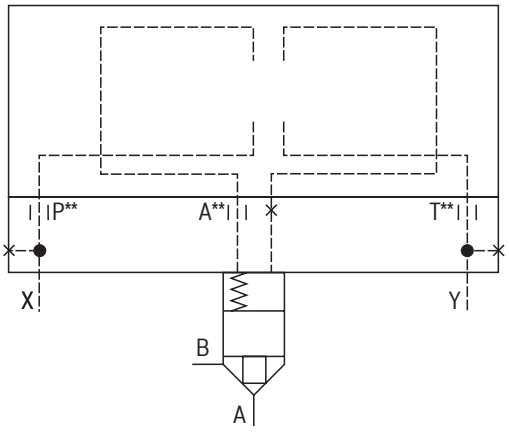

LFA . WEB... (NG80 ... 100)

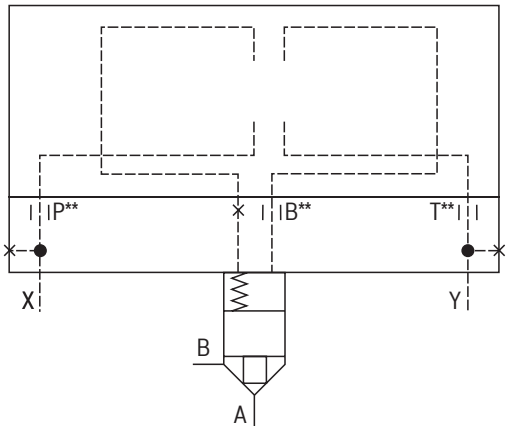

Control cover "WEA" and "WEB" for set-up of a directional valve: NG80 ... 100
(dimensions in mm)

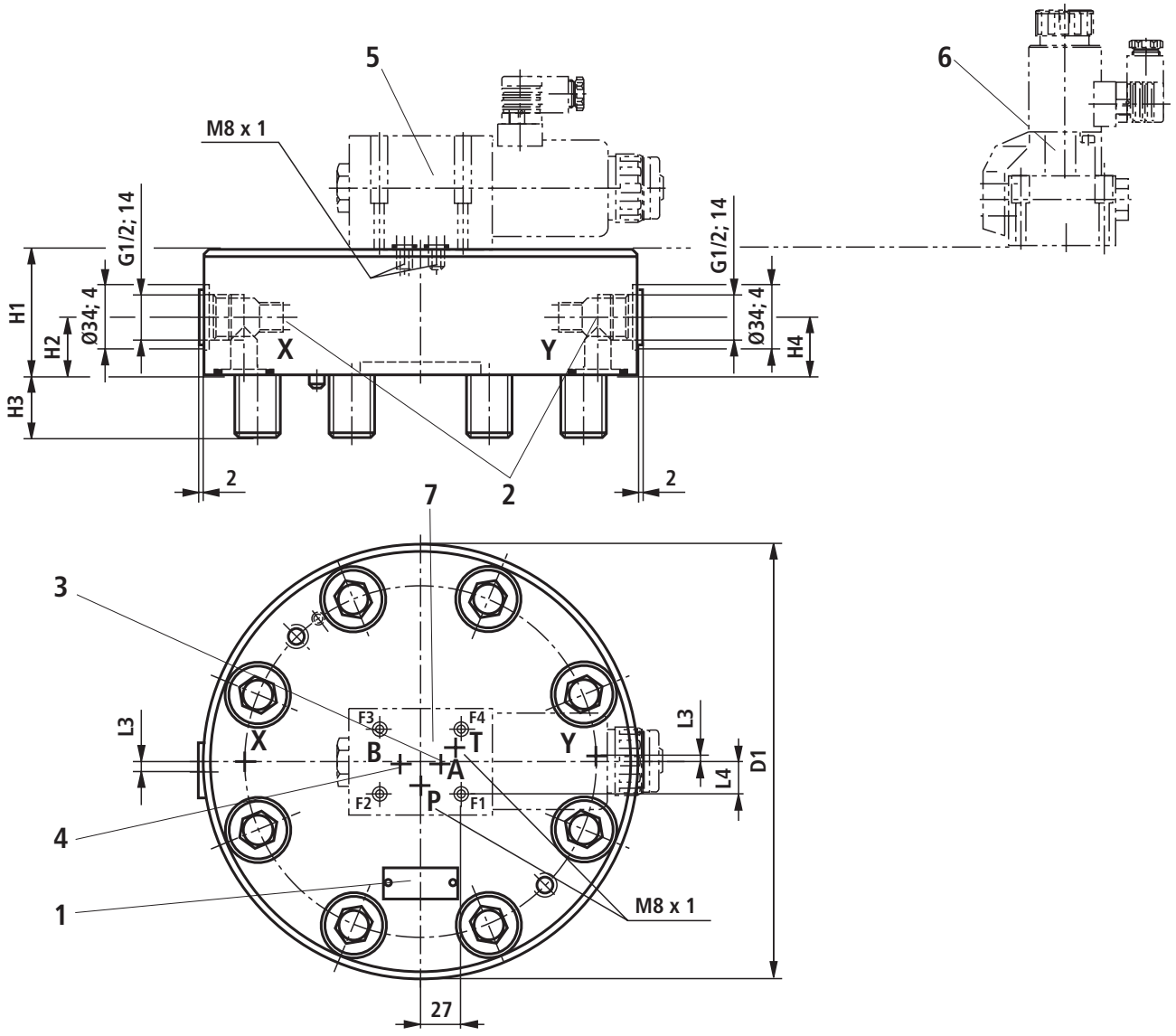

1	Name plate
2	Port X and Y optionally as threaded ports
3	Plug screw at type WEB
4	Plug screw at type WEA
5	Directional spool valve type 4WE 10 D... (pilot control valve), separate order, see page 15
6	Directional seat valve type M-3SEW 10 ... (pilot control valve), separate order, see page 15
7	Porting pattern according to ISO 4401-05-04-0-05 (mounting thread for version "/12" see data sheet 08936)

NG	**80**	**100**
D1	250	300
H1	80	100
H2	30	24
H3	45	52.5
H4	45	55
L3	10	13
L4	16	18

☞ **Notice:**
The dimensions are nominal dimensions which are subject to tolerances.

Control cover "WEA" and "WEB" for set-up of a directional valve: NG125 ... 160

01	02	03		04		05	06	07	08	09	10	11	12	13	14	15
LFA			**–**	**2X**	**/**									**1)**	**1)**	**1)**

02		03	06	07	08	09
Size		**Type**	**Orifice in the channel** (Ø in 1/10 mm)			
			A	**B**	**P**	**T**
125	**160**	**WEA**	A** ◿		P** ◿	T** ◿
		WEB		B** ◿	P** ◿	T** ◿

◿ Orifice possible, if required, specifications have to be made

1) See "Ordering code for control cover type LFA..." page 14.

For ordering code of orifices, see page 95.

LFA . WEA... (NG125)

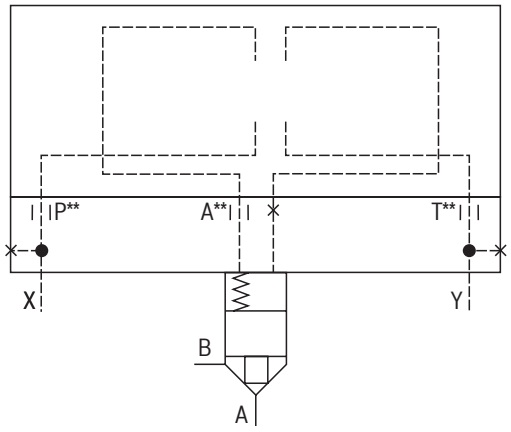

LFA . WEB... (NG125)

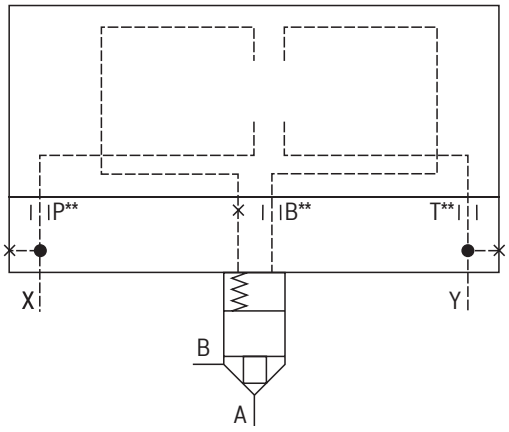

LFA . WEA... (NG160)

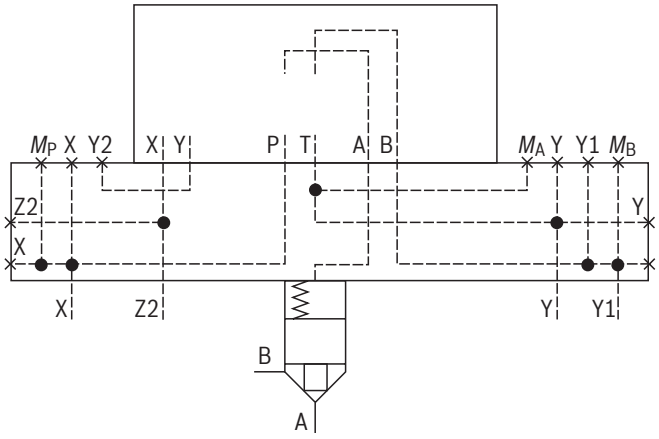

Control cover "WEA" and "WEB" for set-up of a directional valve: NG125 ... 160
(dimensions in mm)

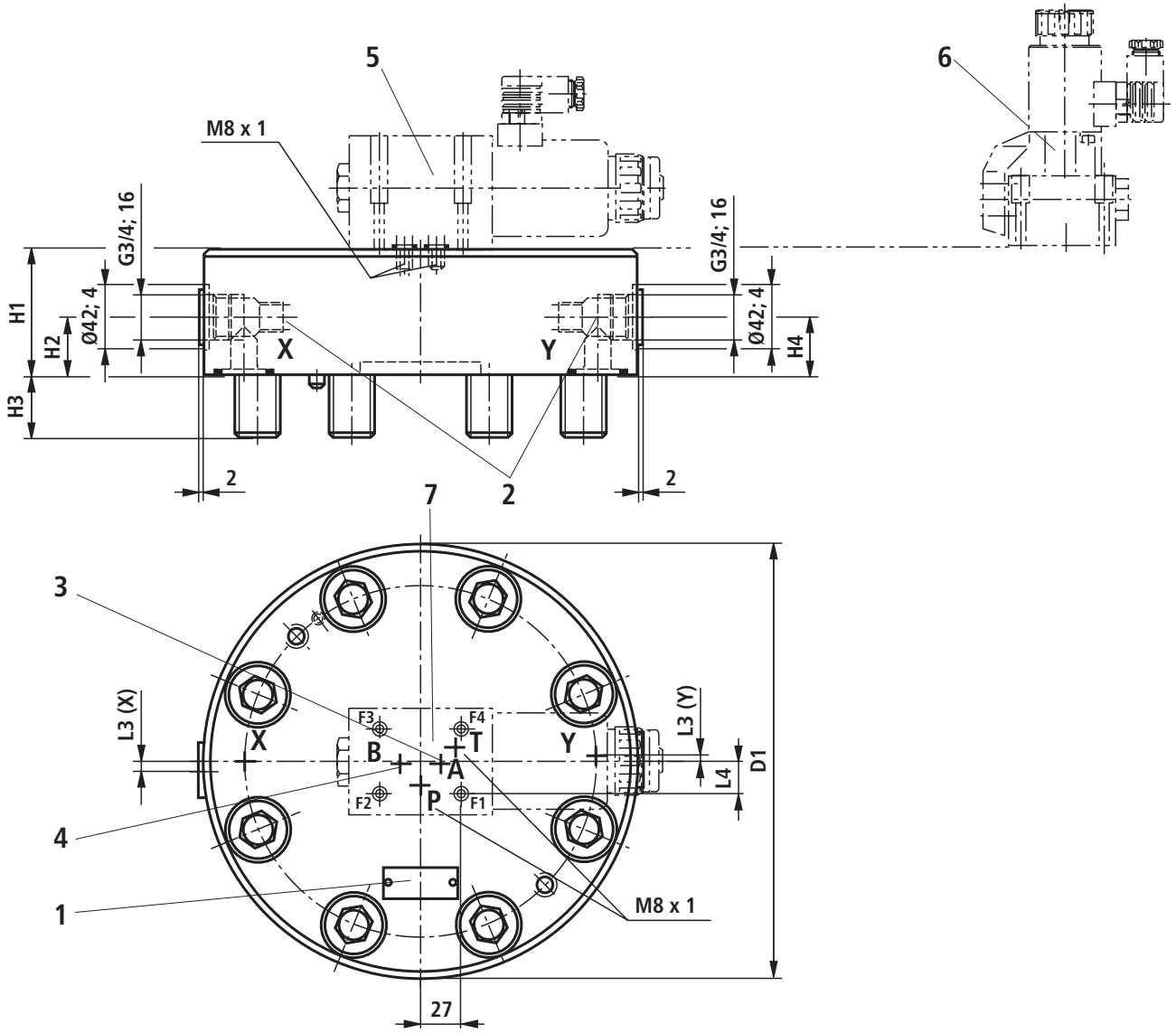

1 Name plate
2 Port X and Y optionally as threaded ports
3 Plug screw at type WEB
4 Plug screw at type WEA
5 Directional spool valve type 4WE 10 D... (NG125) or type WEH 25 ... (NG160) (pilot control valve), separate order, see page 15
6 Directional seat valve type M-3SEW 10 ... (pilot control valve), separate order, see page 15
7 Porting pattern according to
- ▶ NG125: ISO 4401-05-04-0-05
- ▶ NG160: ISO 4401-08-08-0-05

(mounting thread for version "/12" see data sheet 08936)

NG	125	160
D1	380	480
H1	105	150
H2	51	80
H3	56	71
H4	51	80
L3-X	16	15
L3-Y	10	15
L4	23	46

☞ **Notice:**
The dimensions are nominal dimensions which are subject to tolerances.

Control cover "WEMA" and "WEMB" for set-up of a directional valve: NG16 ... 50

01	02	03		04		05	06	07	08	09	10	11	12	13	14	15
LFA			**–**	**7X**	**/**									**1)**	**1)**	**1)**

02					03	08	09	11
Size					**Type**	**Orifice in the channel** (Ø in 1/10 mm)		
						P	**T**	**F**
16	**25**	**32**	**40**	**50**	**WEMA**	P** ◿	T** ◿	F** ◿
					WEMB	P** ◿	T** ◿	F** ◿

◿ Orifice possible, if required, specifications have to be made

1) See "Ordering code for control cover type LFA..." page 14.

For ordering code of orifices, see page 95.

LFA . WEMA... (NG16 ... 32)

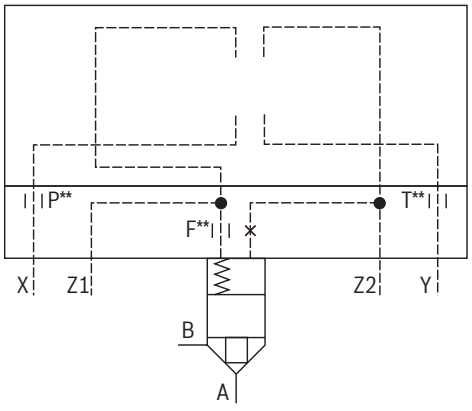

LFA . WEMB... (NG16 ... 32)

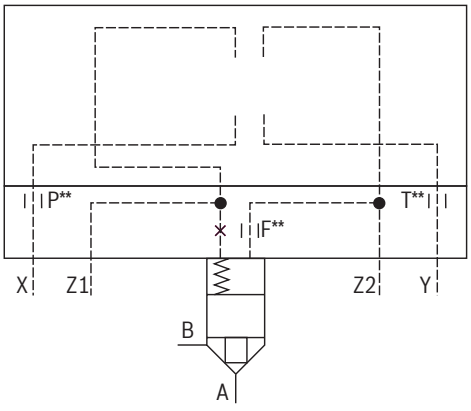

LFA . WEMA... (NG40 and 50)

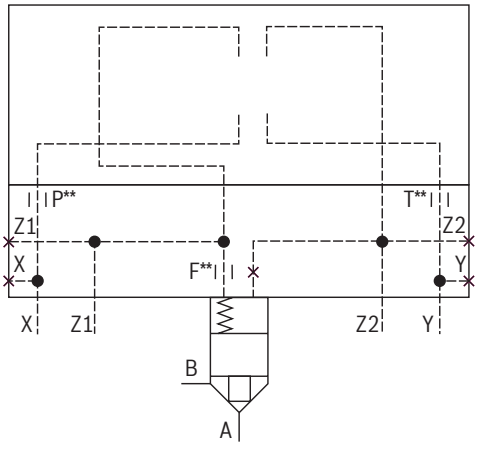

LFA . WEMB... (NG40 and 50)

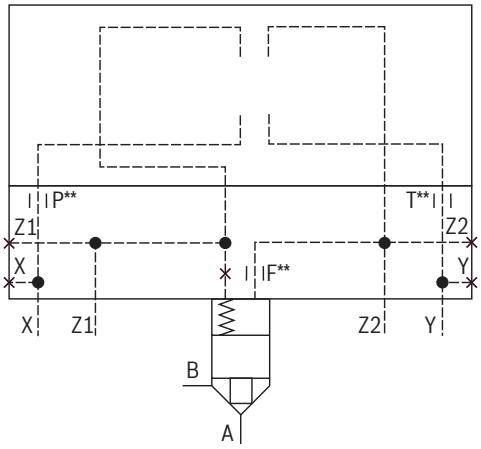

Control cover "WEMA" and "WEMB" for set-up of a directional valve: NG16 ... 50
(dimensions in mm)

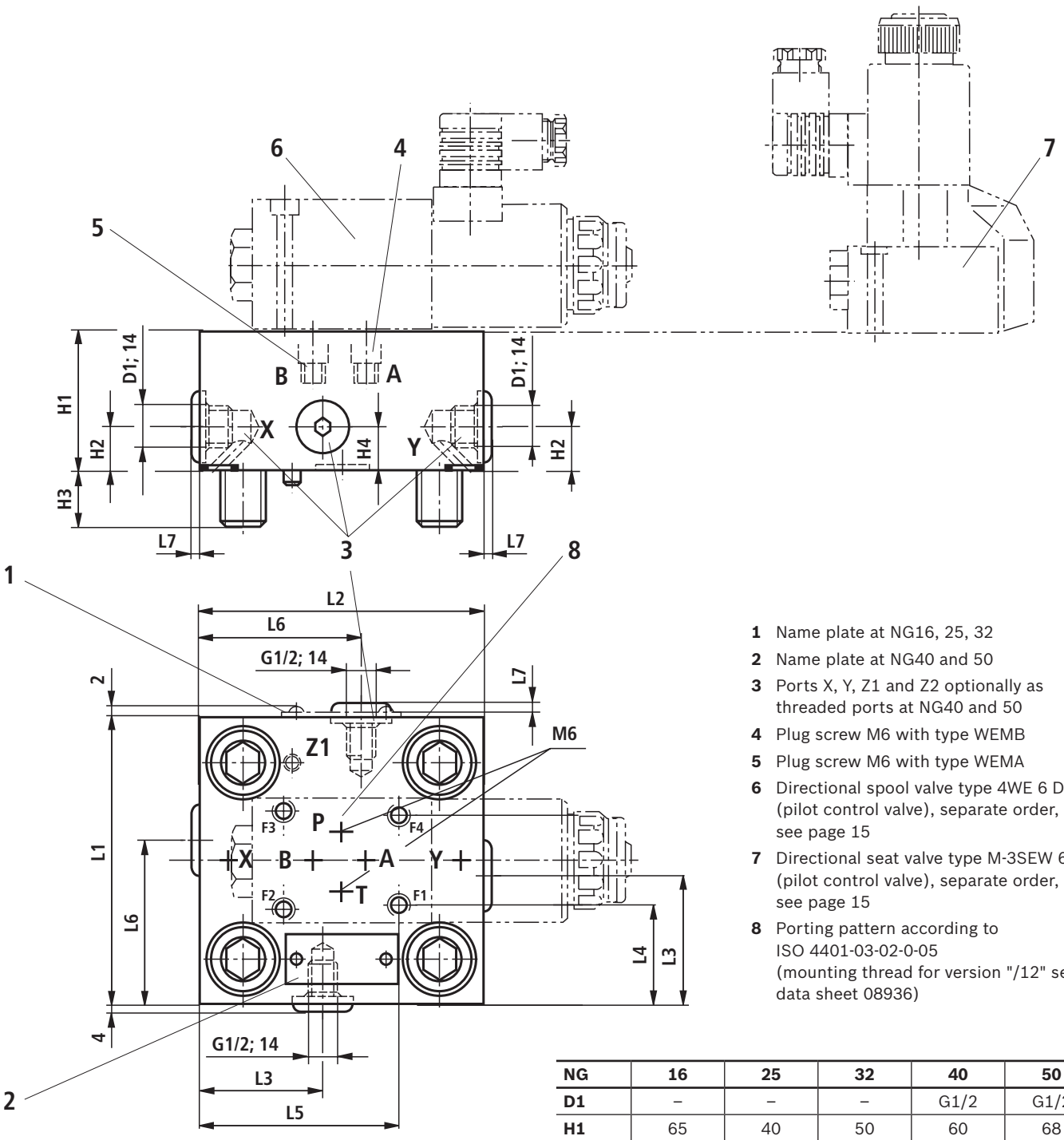

1 Name plate at NG16, 25, 32
2 Name plate at NG40 and 50
3 Ports X, Y, Z1 and Z2 optionally as threaded ports at NG40 and 50
4 Plug screw M6 with type WEMB
5 Plug screw M6 with type WEMA
6 Directional spool valve type 4WE 6 D... (pilot control valve), separate order, see page 15
7 Directional seat valve type M-3SEW 6 ... (pilot control valve), separate order, see page 15
8 Porting pattern according to ISO 4401-03-02-0-05 (mounting thread for version "/12" see data sheet 08936)

NG	16	25	32	40	50
D1	–	–	–	G1/2	G1/2
H1	65	40	50	60	68
H2	–	–	–	30	32
H3	15	24	28	32	34
H4	–	–	–	30	32
L1	65	85	100	125	140
L2	80	85	100	125	140
L3	–	–	–	53	60
L4	17	27	34.5	47	54.5
L5	47.5	64	71.5	84	91.5
L6	–	–	–	72	80
L7	4	4	4	6	6

☞ **Notice:**
The dimensions are nominal dimensions which are subject to tolerances.

Control cover "WEMA" and "WEMB" for set-up of a directional valve: NG63

01	02	03		04		05	06	07	08	09	10	11	12	13	14	15
LFA	**63**		**–**	**7X**	**/**									**1)**	**1)**	**1)**

03	08	09	11
Type	**Orifice in the channel** (Ø in 1/10 mm)		
	P	**T**	**F**
WEMA	P** ◿	T** ◿	F** ◿
WEMB	P** ◿	T** ◿	F** ◿

◿ Orifice possible, if required, specifications have to be made

1) See "Ordering code for control cover type LFA..." page 14.

For ordering code of orifices, see page 95.

LFA 63 WEMA...

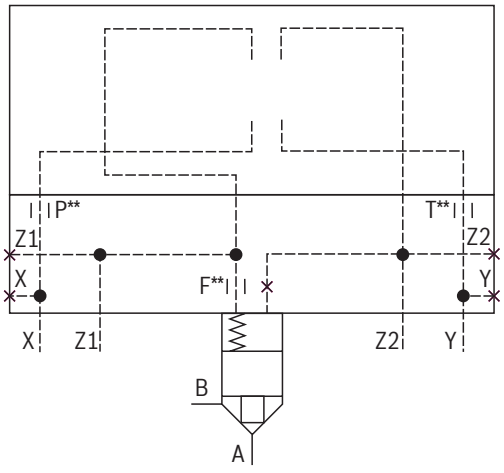

LFA 63 WEMB...

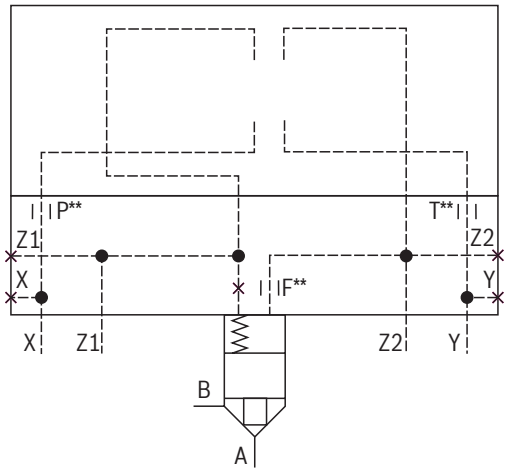

Control cover "WEMA" and "WEMB" for set-up of a directional valve: NG63
(dimensions in mm)

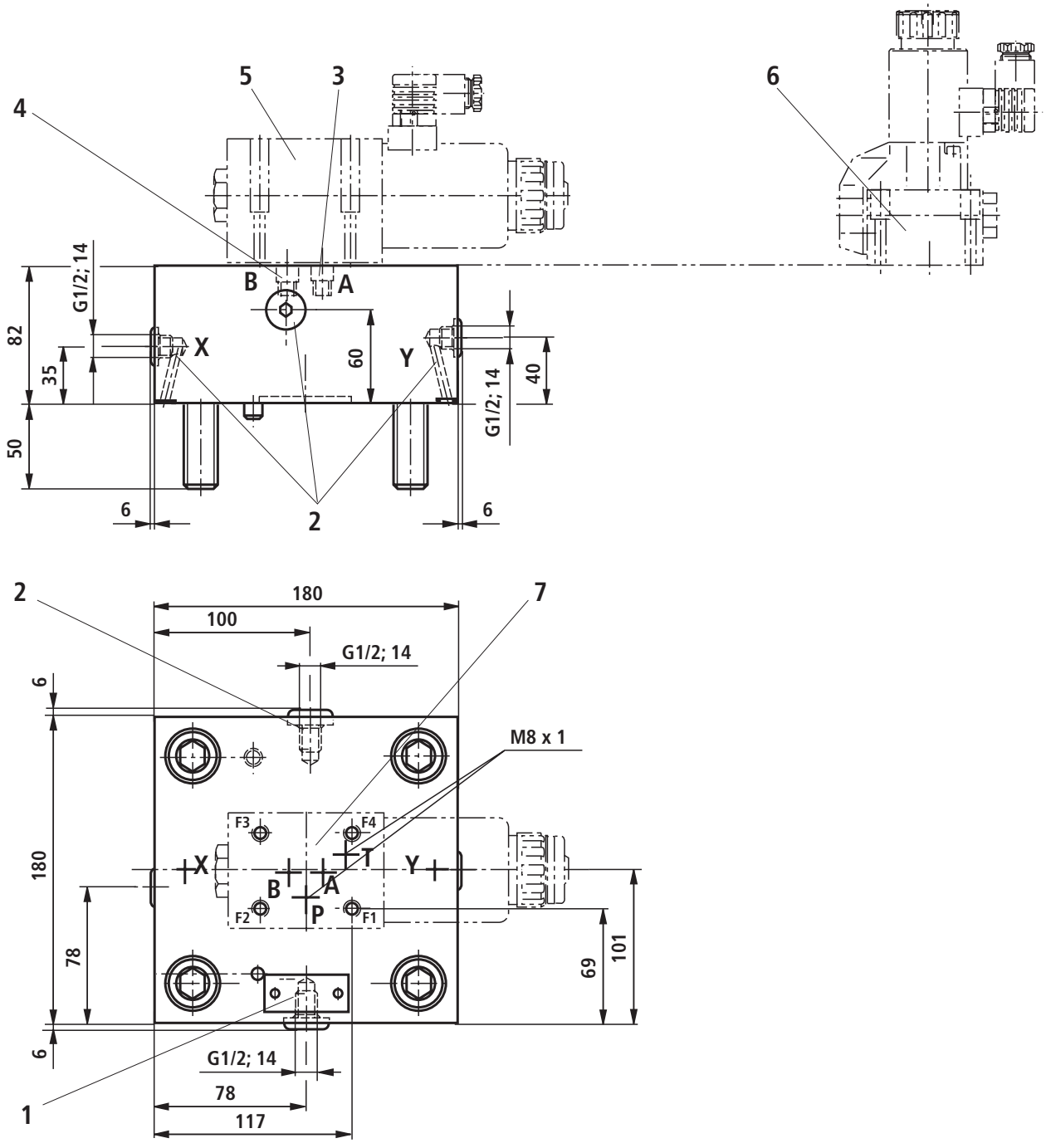

1 Name plate
2 Ports X, Y, Z1 and Z2 optionally as threaded ports
3 Plug screw M8 x 1 with type WEMB
4 Plug screw M8 x 1 with type WEMA
5 Directional spool valve type 4WE 10 D... (pilot control valve), separate order, see page 15
6 Directional seat valve type M-3SEW 10 ... (pilot control valve), separate order, see page 15
7 Porting pattern according to ISO 4401-05-04-0-05 (mounting thread for version "/12" see data sheet 08936)

☞ **Notice:**
The dimensions are nominal dimensions which are subject to tolerances.

Control cover "WEMA" and "WEMB" for set-up of a directional valve: NG80 ... 100

01	02	03		04		05	06	07	08	09	10	11	12	13	14	15
LFA			**–**	**6X**	**/**									**1)**	**1)**	**1)**

02		03	08	09	11
Size		**Type**	**Orifice in the channel** (Ø in 1/10 mm)		
			P	**T**	**F**
80	**100**	**WEMA**	P** ◿	T** ◿	F** ◿
		WEMB	P** ◿	T** ◿	F** ◿

◿ Orifice possible, if required, specifications have to be made

1) See "Ordering code for control cover type LFA..." page 14.

For ordering code of orifices, see page 95.

LFA . WEMA... (NG80 ... 100)

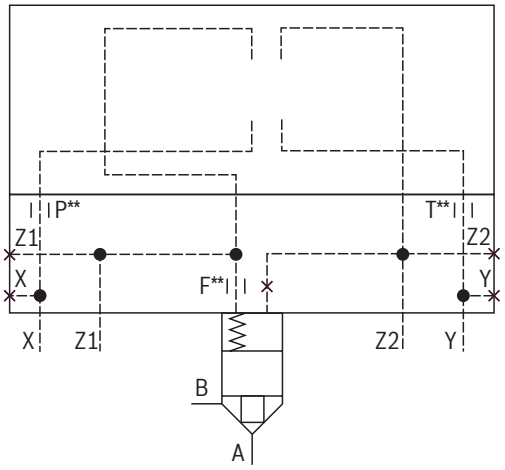

LFA . WEMB... (NG80 ... 100)

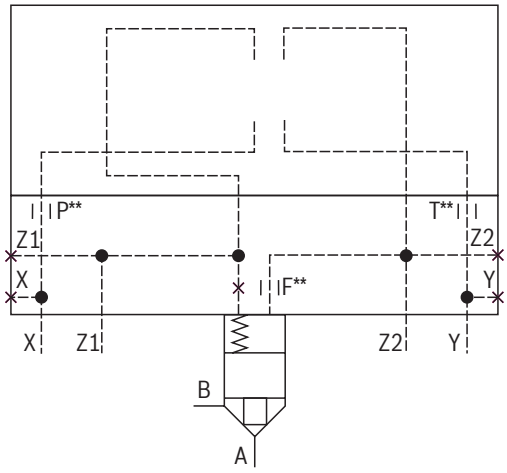

Control cover "WEMA" and "WEMB" for set-up of a directional valve: NG80 ... 100
(dimensions in mm)

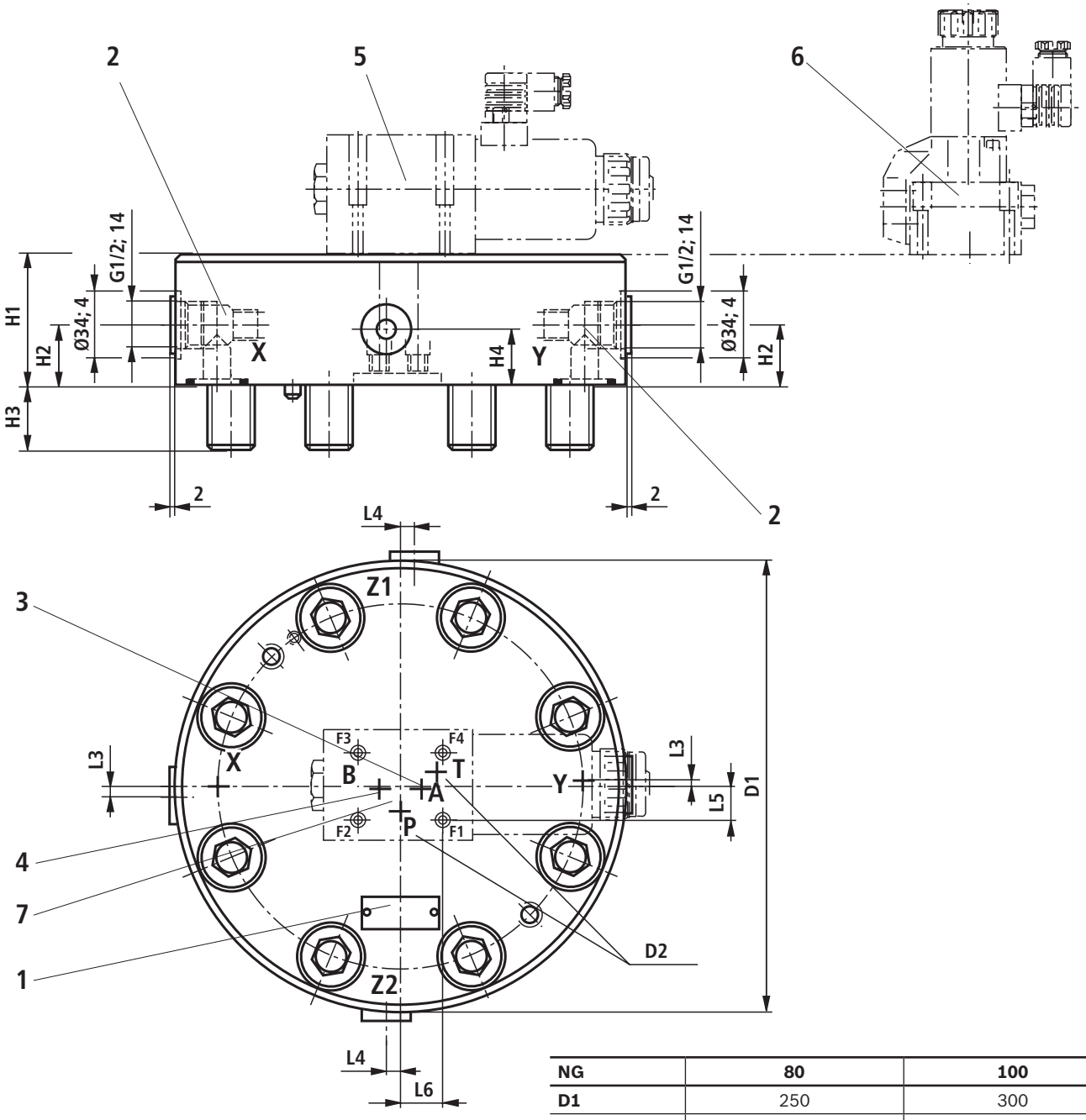

NG	80	100
D1	250	300
D2	M8 x 1	G1/8
H1	80	100
H2	42	55
H3	45	52.5
H4	26	35
L3	10	13
L4	10	9.5
L5	16	27
L6	27	26

1 Name plate
2 Ports X, Y, Z1 and Z2 optionally as threaded ports
3 Plug screw M8 x 1 with type WEMB
4 Plug screw M8 x 1 with type WEMA
5 Directional spool valve type 4WE 10 D... (pilot control valve), separate order, see page 15
6 Directional seat valve type M-3SEW 10 ... (pilot control valve), separate order, see page 15
7 Porting pattern according to ISO 4401-05-04-0-05 (mounting thread for version "/12" see data sheet 08936)

Notice:
The dimensions are nominal dimensions which are subject to tolerances.

Control cover "WEMA" for set-up of a directional valve: NG125

01	02	03		04		05	06	07	08	09	10	11	12	13	14	15
LFA	**125**	**WEMA**	**–**	**2X**	**/**									**1)**	**1)**	**1)**

08	09	11
Orifice in the channel (Ø in 1/10 mm)		
P	**T**	**F**
P** ◿	T** ◿	F** ◿

◿ Orifice possible, if required, specifications have to be made

1) See "Ordering code for control cover type LFA..." page 14.

For ordering code of orifices, see page 95.

LFA 125 WEMA...

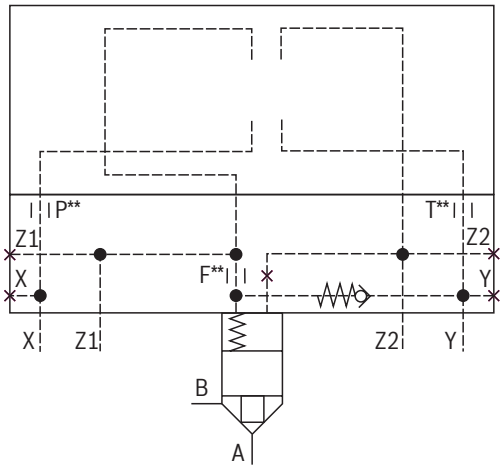

Control cover "WEMA" for set-up of a directional valve: NG125
(dimensions in mm)

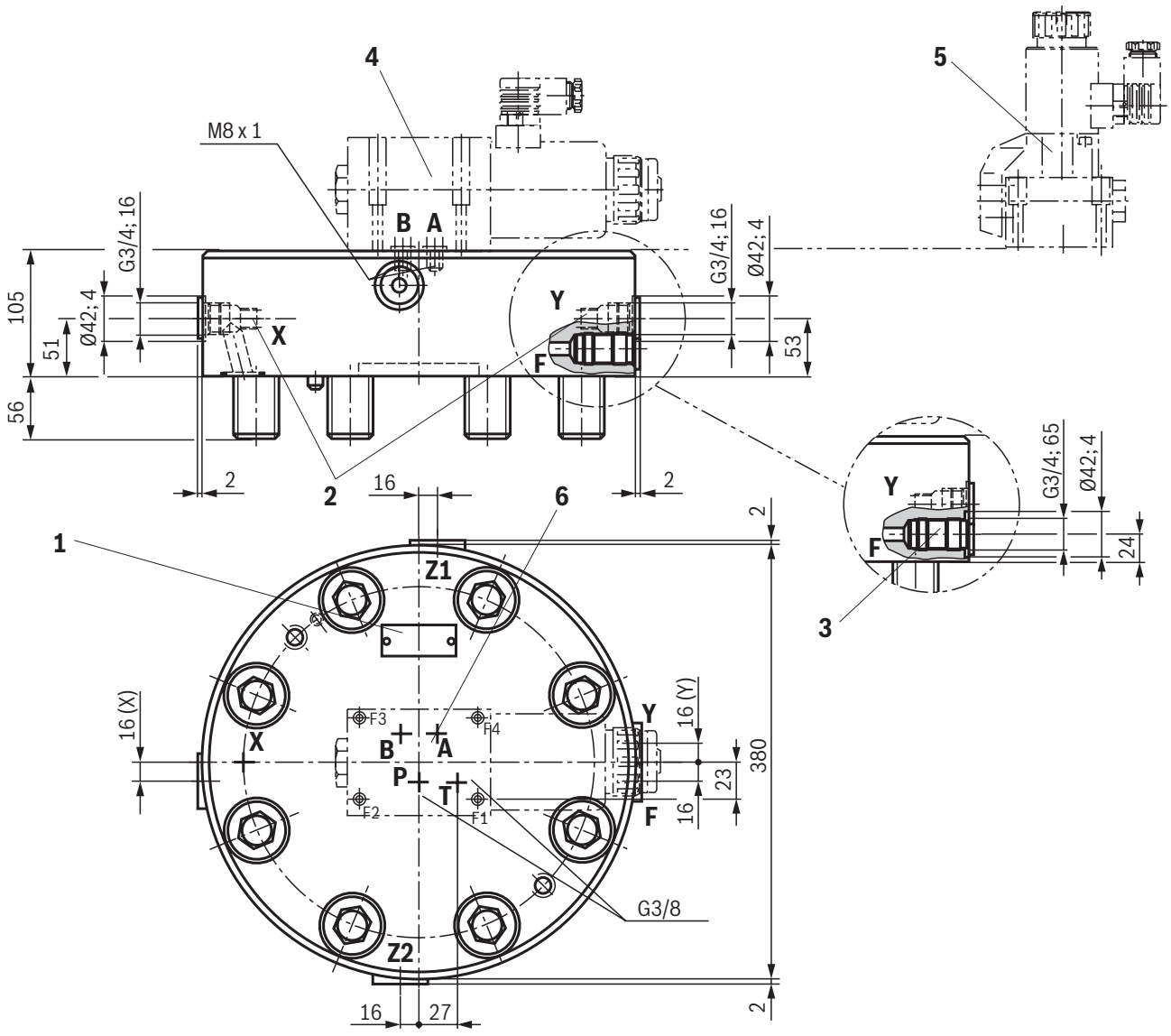

1 Name plate

2 Ports X, Y, Z1 and Z2 optionally as threaded ports

3 Port F with check valve

4 Directional spool valve type 4WEH 16 D... (pilot control valve), separate order, see page 15

5 Directional seat valve type M-3SEW 16 ... (pilot control valve), separate order, see page 15

6 Porting pattern according to ISO 4401-07-07-0-05
(mounting thread for version "/12" see data sheet 08936)

Notice:
The dimensions are nominal dimensions which are subject to tolerances.

Control cover "WECA" for set-up of a directional valve: NG16 ... 50

01	02	03		04		05	06	07	08	09	10	11	12	13	14	15
LFA		**WECA**	**–**	**7X**	**/**									**1)**	**1)**	**1)**

02	03	06	07	08	09	11
Size	**Type**	**Orifice in the channel** (Ø in 1/10 mm)				
		A	**B**	**P**	**T**	**F**
16	**WECA**	A** ◿	B** ◿	P** ◿	T** ◿	F** ◿
25		A** ◿	B** ◿	P** ◿	T** ◿	
32		A** ◿	B** ◿	P** ◿	T** ◿	
40		A** ◿	B** ◿	P** ◿	T** ◿	
50		A** ◿	B** ◿	P** ◿	T** ◿	

◿ Orifice possible, if required, specifications have to be made

1) See "Ordering code for control cover type LFA..." page 14.

For ordering code of orifices, see page 95.

LFA . WECA... (NG16)

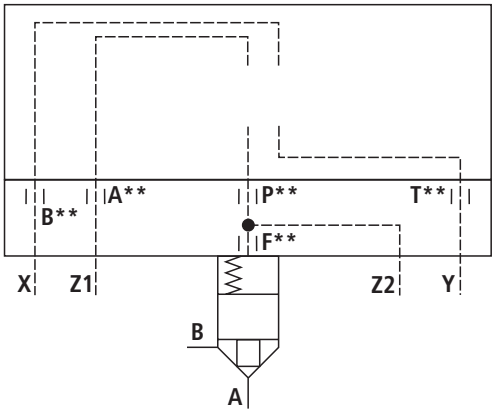

LFA . WECA... (NG25 and 32)

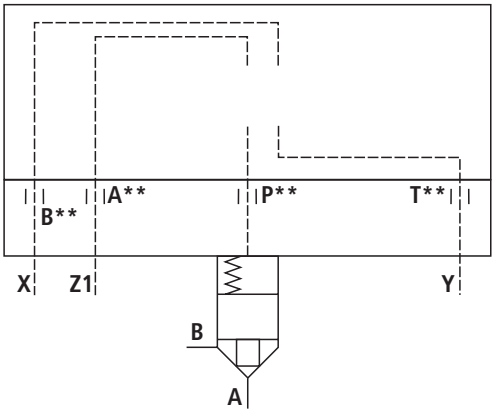

LFA . WECA... (NG40 and 50)

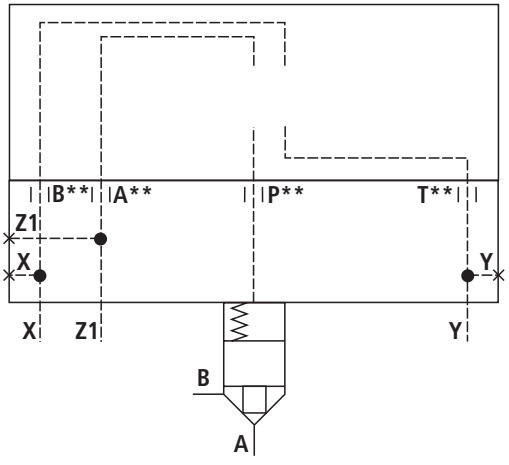

Control cover "WECA" for set-up of a directional valve: NG16 ... 50
(dimensions in mm)

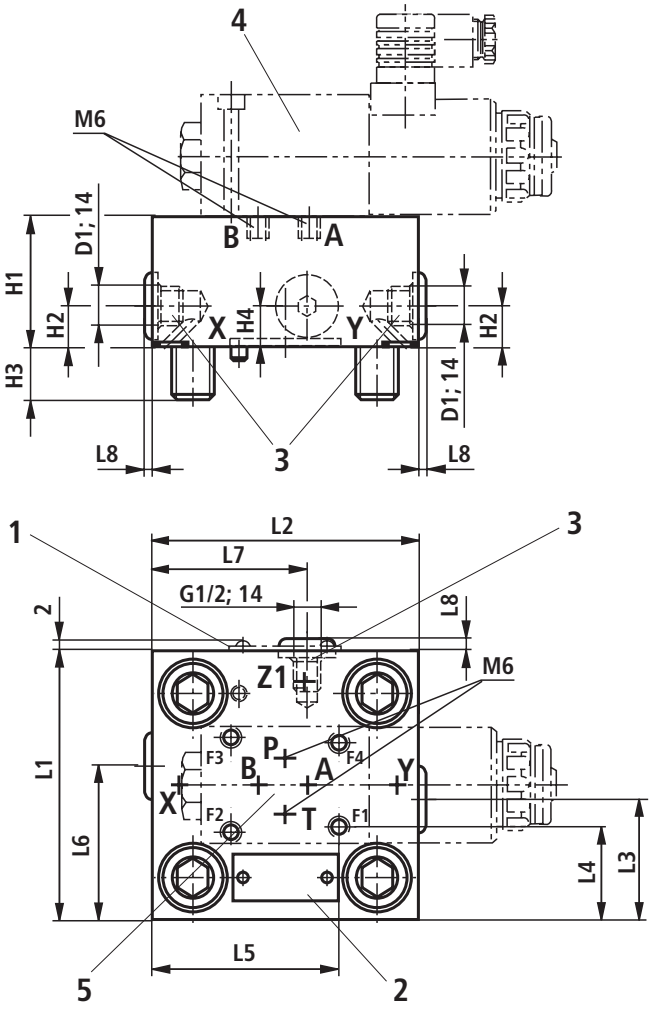

1 Name plate at NG16, 25, 32

2 Name plate at NG40 and 50

3 Ports X, Y and Z1 optionally as threaded ports at NG40 and 50

4 Directional spool valve type 3WE 6 A... (pilot control valve), separate order, see page 15

5 Porting pattern according to ISO 4401-03-02-0-05 (mounting thread for version "/12" see data sheet 08936)

NG	16	25	32	40	50
D1	–	–	–	G1/2	G1/2
H1	40	40	50	60	68
H2	–	–	–	30	32
H3	15	24	28	32	34
H4	–	–	–	30	32
L1	65	85	100	125	140
L2	80	85	100	125	140
L3	–	–	–	53	60
L4	17	27	34.5	47	54.5
L5	47.5	64	71.5	84	91.5
L6	–	–	–	62.5	70
L7	–	–	–	72	80
L8	4	4	4	6	6

☞ **Notice:**
The dimensions are nominal dimensions which are subject to tolerances.

Control cover "WECA" for set-up of a directional valve: NG63

01	02	03		04		05	06	07	08	09	10	11	12	13	14	15
LFA	**63**	**WECA**	**–**	**7X**	**/**									**1)**	**1)**	**1)**

06	07	08	09
Orifice in the channel (Ø in 1/10 mm)			
A	**B**	**P**	**T**
A** ◿	B** ◿	P** ◿	T** ◿

◿ Orifice possible, if required, specifications have to be made

1) See "Ordering code for control cover type LFA..." page 14.

For ordering code of orifices, see page 95.

LFA 63 WECA...

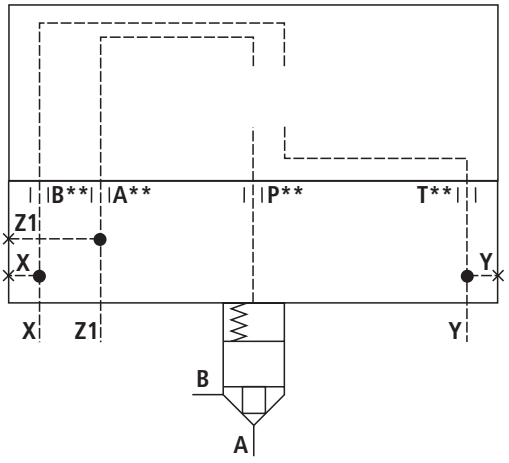

Control cover "WECA" for set-up of a directional valve: NG63
(dimensions in mm)

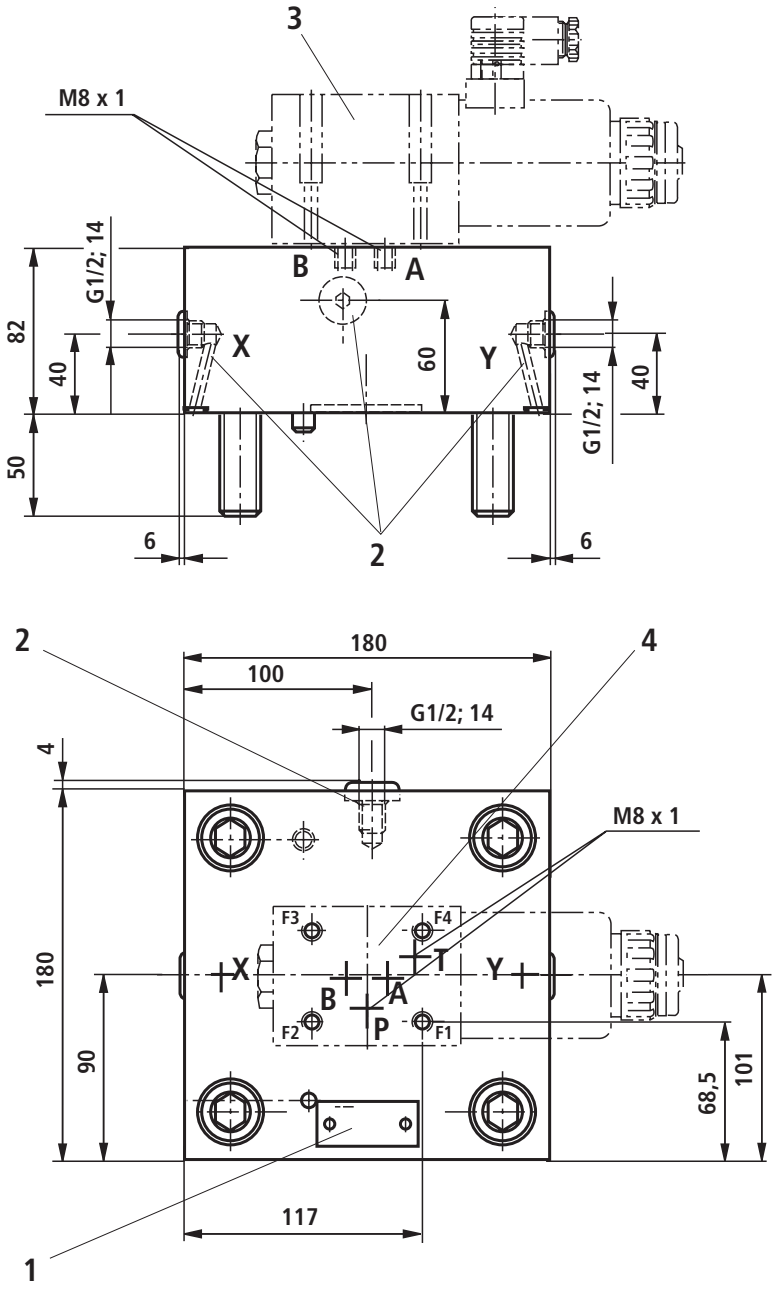

1 Name plate
2 Ports X, Y and Z1 optionally as threaded ports
3 Directional spool valve type 3WE 6 A... (pilot control valve), separate order, see page 15
4 Porting pattern according to ISO 4401-05-04-0-05 (mounting thread for version "/12" see data sheet 08936)

☞ **Notice:**
The dimensions are nominal dimensions which are subject to tolerances.

Control cover "WECA" for set-up of a directional valve: NG 80 ... 100

01	02	03		04		05	06	07	08	09	10	11	12	13	14	15
LFA		**WECA**	**–**	**6X**	**/**									**1)**	**1)**	**1)**

02		06	07	08	09
Size		**Orifice in the channel** (Ø in 1/10 mm)			
		A	**B**	**P**	**T**
80	**100**	A** ◿	B** ◿	P** ◿	T** ◿

◿ Orifice possible, if required, specifications have to be made

1) See "Ordering code for control cover type LFA..." page 14.

For ordering code of orifices, see page 95.

LFA . WECA... (NG80 ... 100)

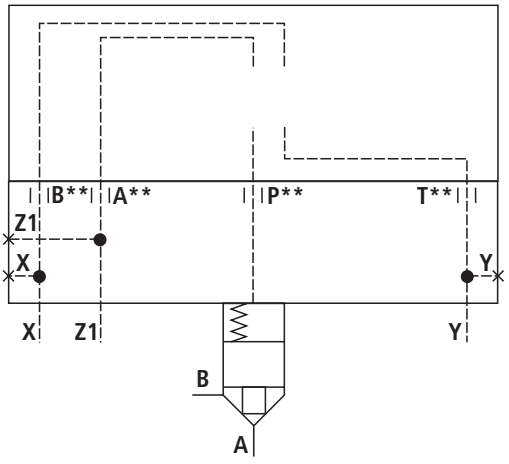

Control cover "WECA" for set-up of a directional valve: NG 80 ... 100
(dimensions in mm)

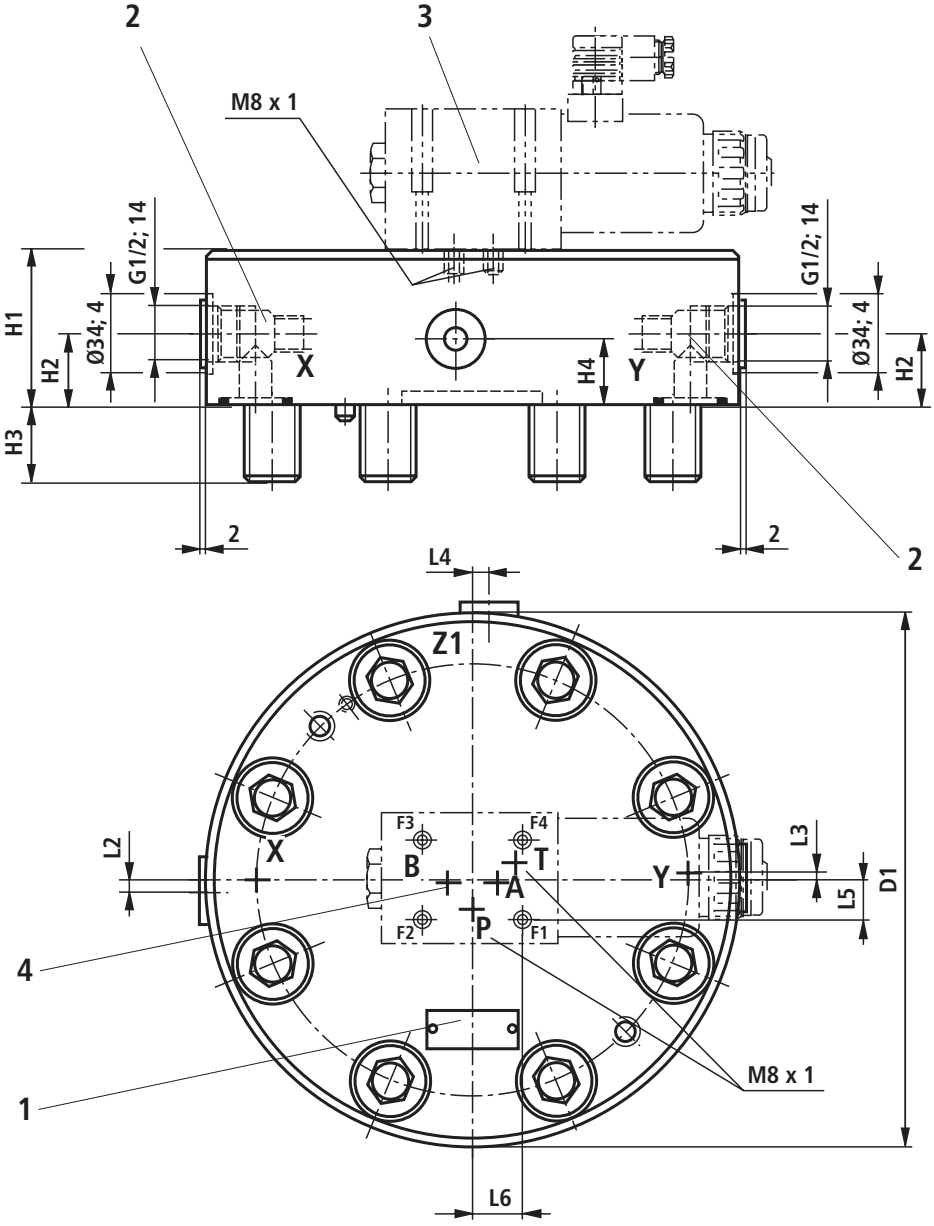

1 Name plate

2 Ports X, Y, Z1 and Z2 optionally as threaded ports

3 Directional spool valve type 3WE 10 A... (pilot control valve), separate order, see page 15

4 Porting pattern according to ISO 4401-05-04-0-05 (mounting thread for version "/12" see data sheet 08936)

NG	80	100
D1	250	300
H1	80	100
H2	30	40
H3	45	52.5
H4	30	70
L2	0	6
L3	6	6
L4	6	6
L5	23	19
L6	27	26

☞ **Notice:**
The dimensions are nominal dimensions which are subject to tolerances.

Control cover "GWA" and "GWB" for set-up of a directional valve: NG16 ... 50

01	02	03		04		05	06	07	08	09	10	11	12	13	14	15
LFA			**–**	**7X**	**/**									**1)**	**1)**	**1)**

02					03	06	07	08	09
Size					**Type**	**Orifice in the channel** (Ø in 1/10 mm)			
						A	**B**	**P**	**T**
16	**25**	**32**	**40**	**50**	**GWA**	A** ◿		P** ◿	T** ◿
					GWB		B** ◿	P** ◿	T** ◿

◿ Orifice possible, if required, specifications have to be made

1) See "Ordering code for control cover type LFA..." page 14.

For ordering code of orifices, see page 95.

LFA . GWA... (NG16 ... 32)

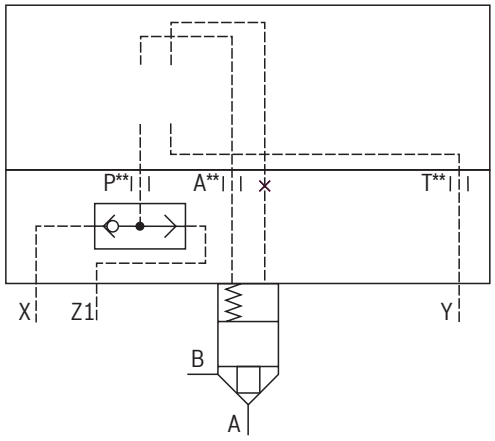

LFA . GWB... (NG16 ... 32)

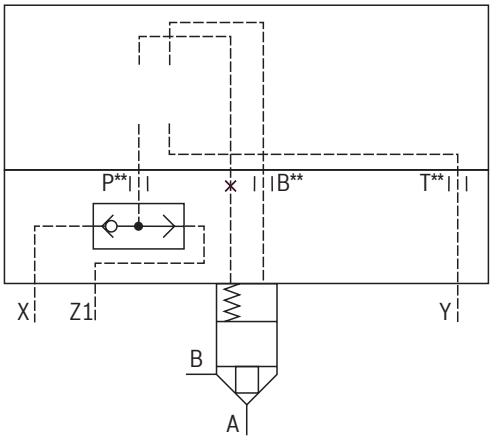

LFA . GWA... (NG40 and 50)

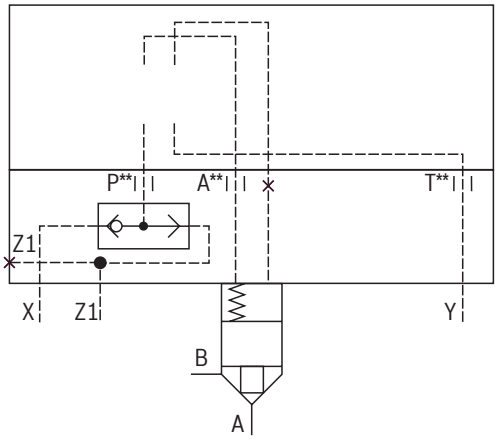

LFA . GWB... (NG40 and 50)

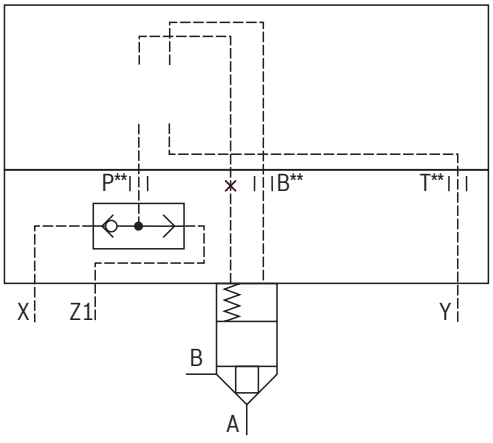

Control cover "GWA" and "GWB" for set-up of a directional valve: NG16 ... 50
(dimensions in mm)

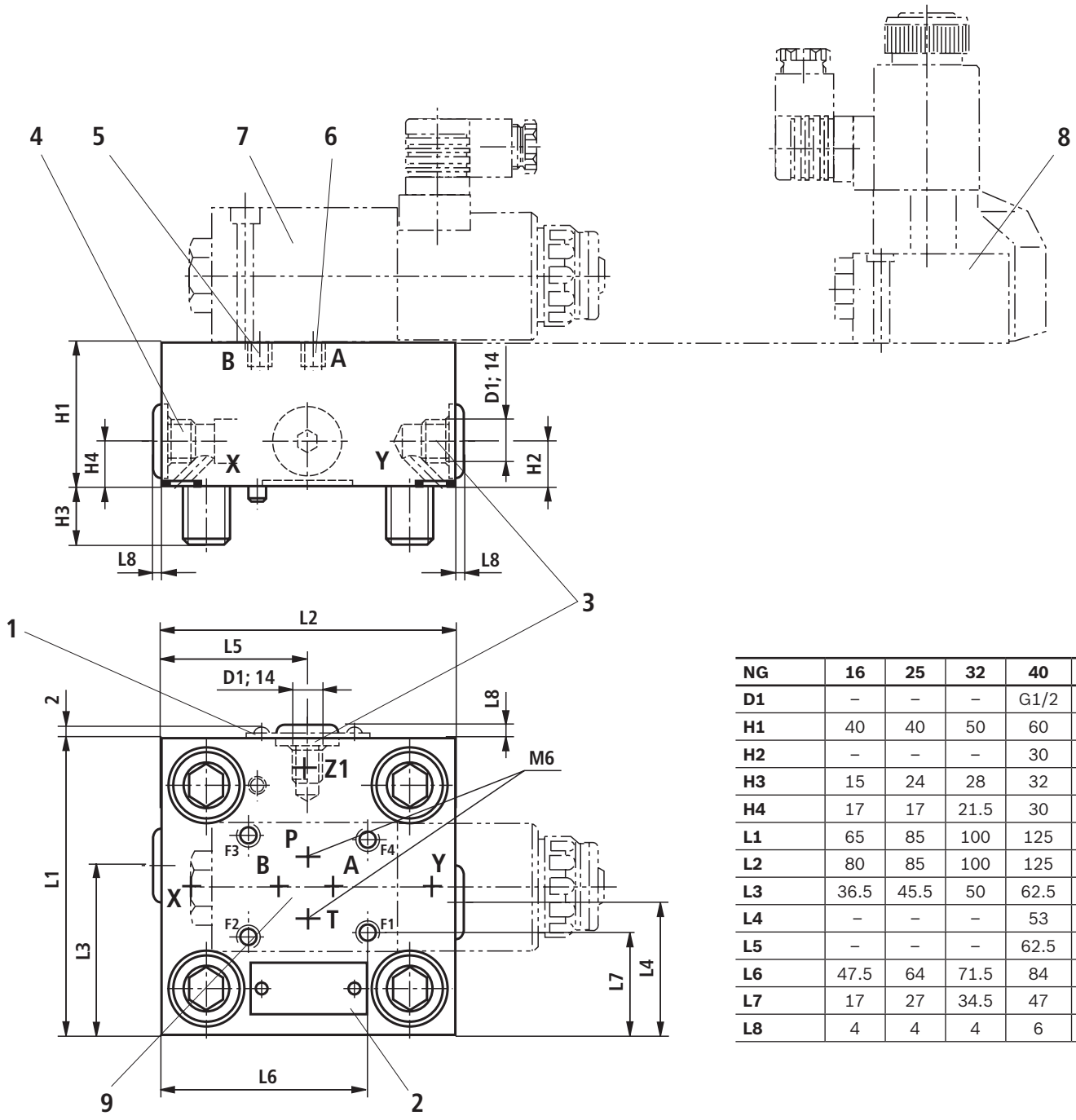

NG	16	25	32	40	50
D1	–	–	–	G1/2	G1/2
H1	40	40	50	60	68
H2	–	–	–	30	32
H3	15	24	28	32	34
H4	17	17	21.5	30	32
L1	65	85	100	125	140
L2	80	85	100	125	140
L3	36.5	45.5	50	62.5	72
L4	–	–	–	53	60
L5	–	–	–	62.5	70
L6	47.5	64	71.5	84	91.5
L7	17	27	34.5	47	54.5
L8	4	4	4	6	6

1 Name plate at NG16, 25, 32

2 Name plate at NG40 and 50

3 Ports Y and Z1 optionally as threaded ports at NG40 and NG50

4 Shuttle valve

5 Plug screw M6 at type GWA

6 Plug screw M6 at type GWB

7 Directional spool valve type 4WE 6 D... (pilot control valve), separate order, see page 15

8 Directional seat valve type M-3SEW 6 ... (pilot control valve), separate order, see page 15

9 Porting pattern according to ISO 4401-03-02-0-05 (mounting thread for version "/12" see data sheet 08936)

☞ **Notice:**
The dimensions are nominal dimensions which are subject to tolerances.

Control cover "GWA" and "GWB" for set-up of a directional valve: NG63

01	02	03		04		05	06	07	08	09	10	11	12	13	14	15
LFA	**63**		**–**	**7X**	**/**									**1)**	**1)**	**1)**

03	06	07	08	09
Type	**Orifice in the channel** (Ø in 1/10 mm)			
	A	**B**	**P**	**T**
GWA	A** ◿		P** ◿	T** ◿
GWB		B** ◿	P** ◿	T** ◿

◿ Orifice possible, if required, specifications have to be made

1) See "Ordering code for control cover type LFA..." page 14.

For ordering code of orifices, see page 95.

LFA 63 GWA...

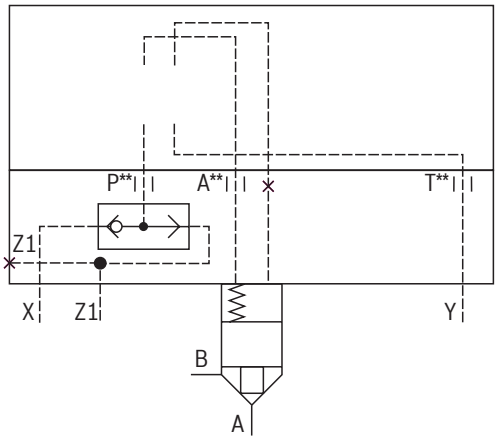

LFA 63 GWB...

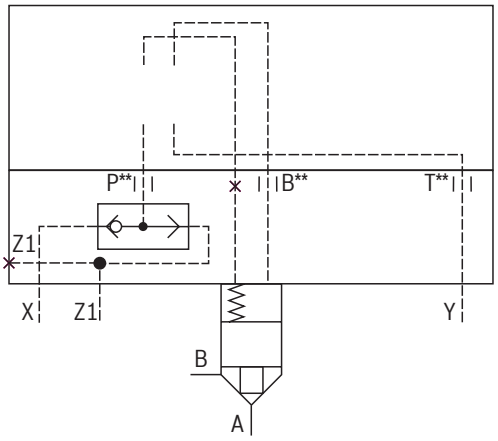

Control cover "GWA" and "GWB" for set-up of a directional valve: NG63
(dimensions in mm)

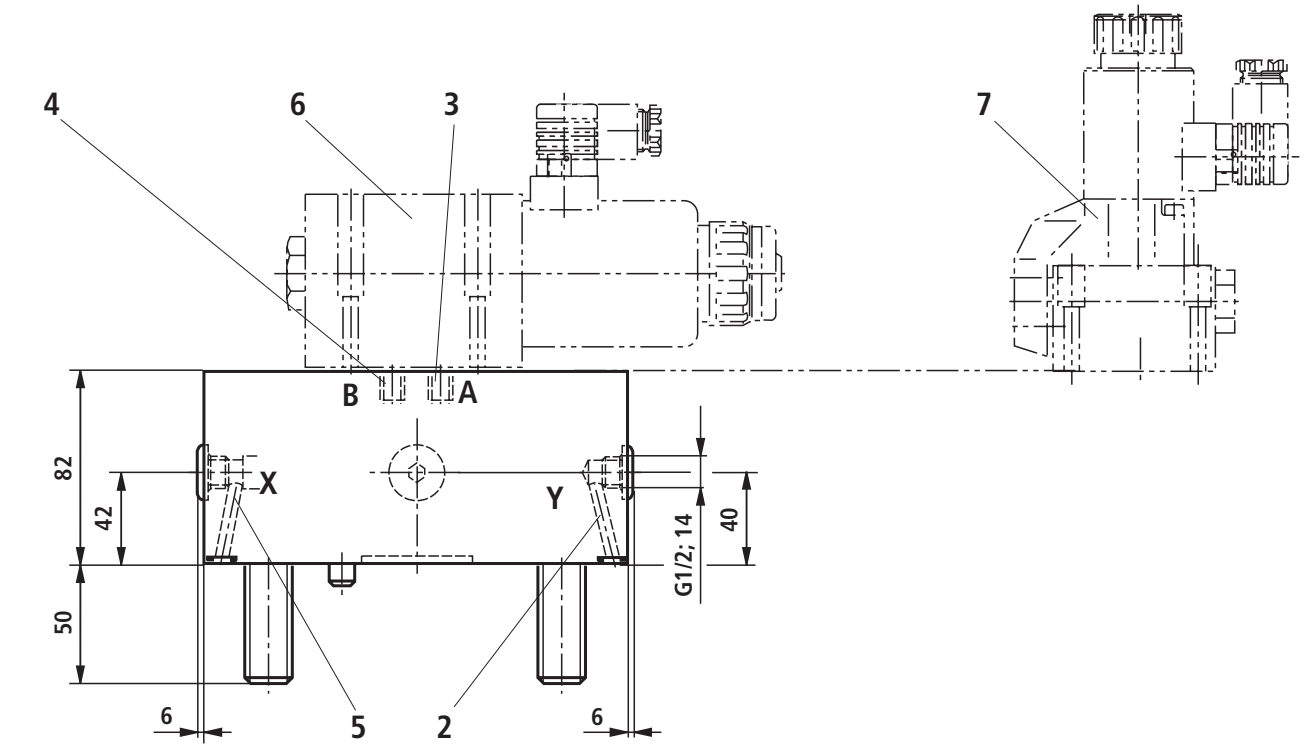

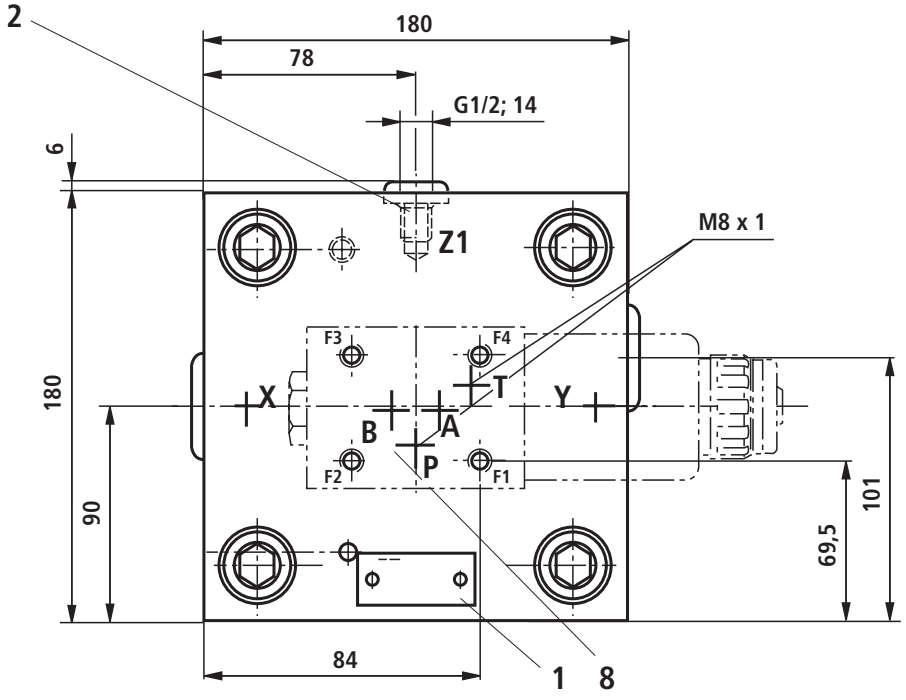

1 Name plate

2 Ports Y and Z1 optionally as threaded ports

3 Plug screw
M8 x 1 at type GWB

4 Plug screw
M8 x 1 at type GWA

5 Shuttle valve

6 Directional spool valve type 4WE 10 D... (pilot control valve), separate order, see page 15

7 Directional seat valve type M-3SEW 10 ... (pilot control valve), separate order, see page 15

8 Porting pattern according to ISO 4401-05-04-0-05 (mounting thread for version "/12" see data sheet 08936)

☞ **Notice:**
The dimensions are nominal dimensions which are subject to tolerances.

Control cover "GWA" and "GWB" for set-up of a directional valve: NG80 ... 100

01	02	03		04		05	06	07	08	09	10	11	12	13	14	15
LFA			**–**	**6X**	**/**									**1)**	**1)**	**1)**

02		03	06	07	08	09
Size		**Type**	**Orifice in the channel** (Ø in 1/10 mm)			
			A	**B**	**P**	**T**
80	**100**	**GWA**	A** ◿		P** ◿	T** ◿
		GWB		B** ◿	P** ◿	T** ◿

◿ Orifice possible, if required, specifications have to be made

1) See "Ordering code for control cover type LFA..." page 14.

For ordering code of orifices, see page 95.

LFA . GWA... (NG80 ... 100)

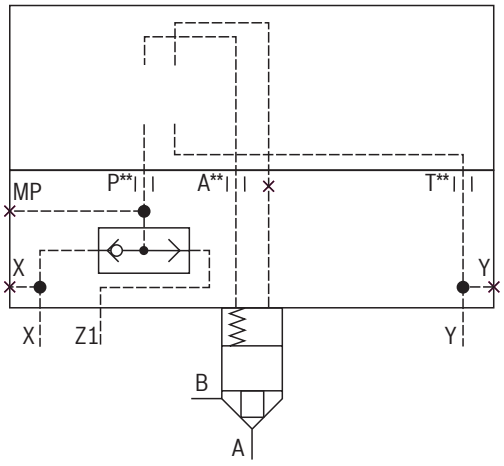

LFA . GWB... (NG80 ... 100)

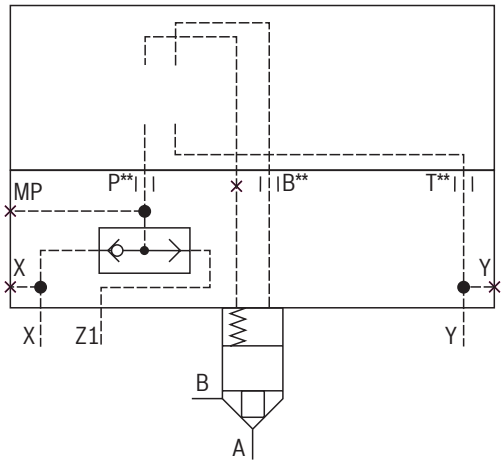

Control cover "GWA" and "GWB" for set-up of a directional valve: NG80 ... 100
(dimensions in mm)

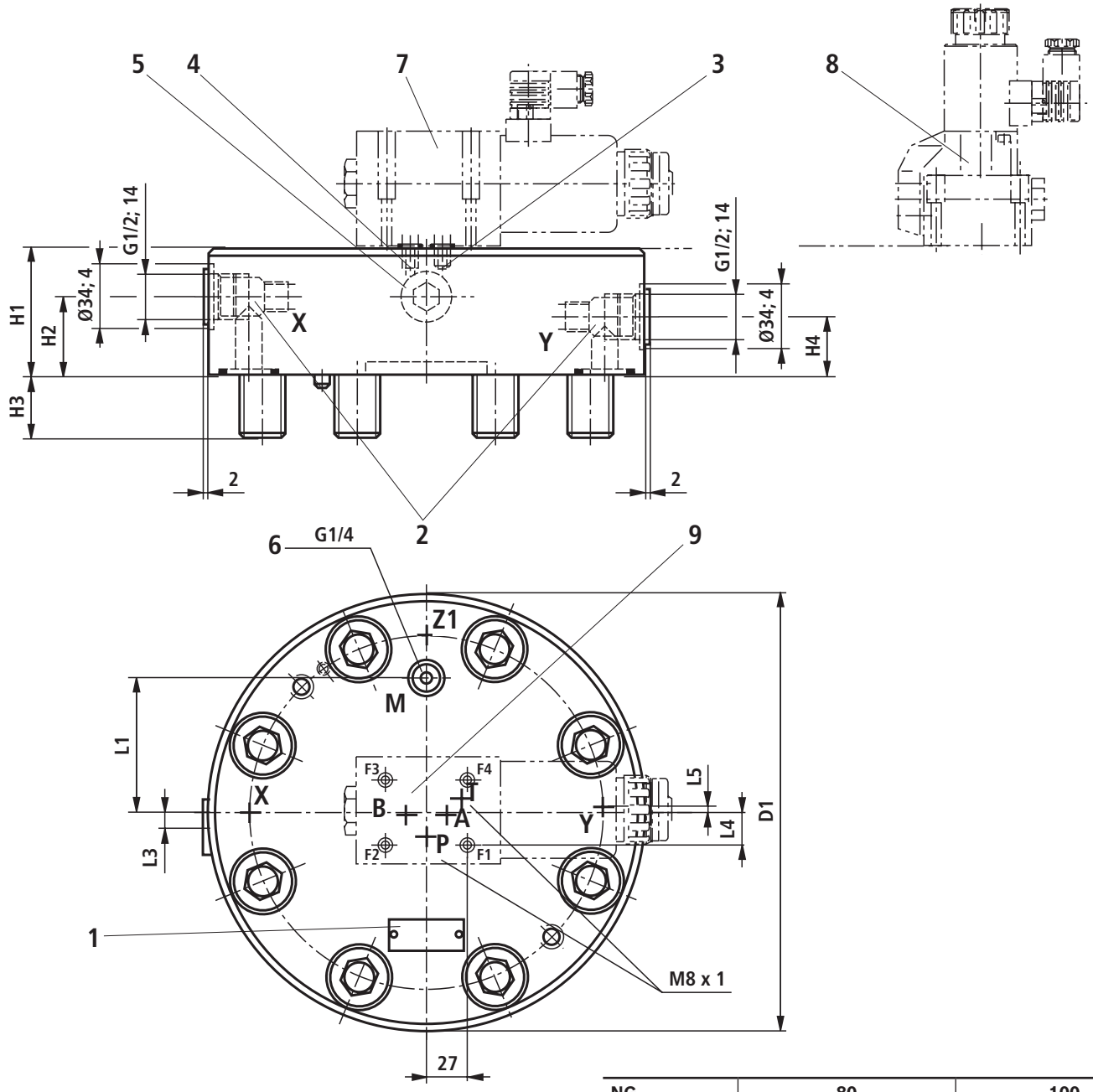

1 Name plate
2 Port X and Y optionally as threaded ports
3 Plug screw M8 x 1 at type GWB
4 Plug screw M8 x 1 at type GWA
5 Shuttle valve
6 Measuring port
7 Directional spool valve type 4WE 10 D... (pilot control valve), separate order, see page 15
8 Directional seat valve type M-3SEW 10 ... (pilot control valve), separate order, see page 15
9 Porting pattern according to ISO 4401-05-04-0-05 (mounting thread for version "/12" see data sheet 08936)

NG	80	100
D1	250	300
H1	80	100
H2	26	40
H3	45	52.5
H4	26	55
L1	74	96.5
L3	9.5	13
L4	17	18
L5	10.5	13

☞ **Notice:**
The dimensions are nominal dimensions which are subject to tolerances.

Control cover "GWMA" for set-up of a directional valve: NG16 ... 32

01	02	03		04		05	06	07	08	09	10	11	12	13	14	15
LFA		**GWMA**	**–**	**7X**	**/**									**1)**	**1)**	**1)**

02			06	07	08	09
Size			**Orifice in the channel** (Ø in 1/10 mm)			
			A	**B**	**P**	**T**
16	**25**	**32**	A** ◿	B** ◿	P** ◿	T** ◿

◿ Orifice possible, if required, specifications have to be made

1) See "Ordering code for control cover type LFA..." page 14.

For ordering code of orifices, see page 95.

LFA . GWMA... (NG16 and 25)

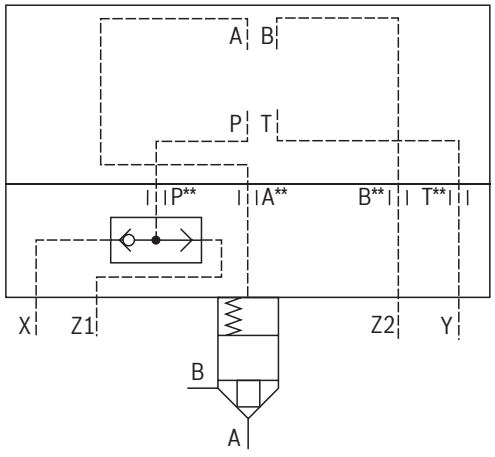

LFA . GWMA... (NG32)

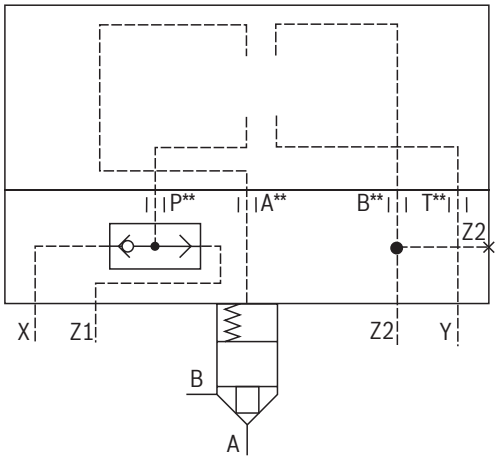

Control cover "GWMA" for set-up of a directional valve: NG16 ... 32
(dimensions in mm)

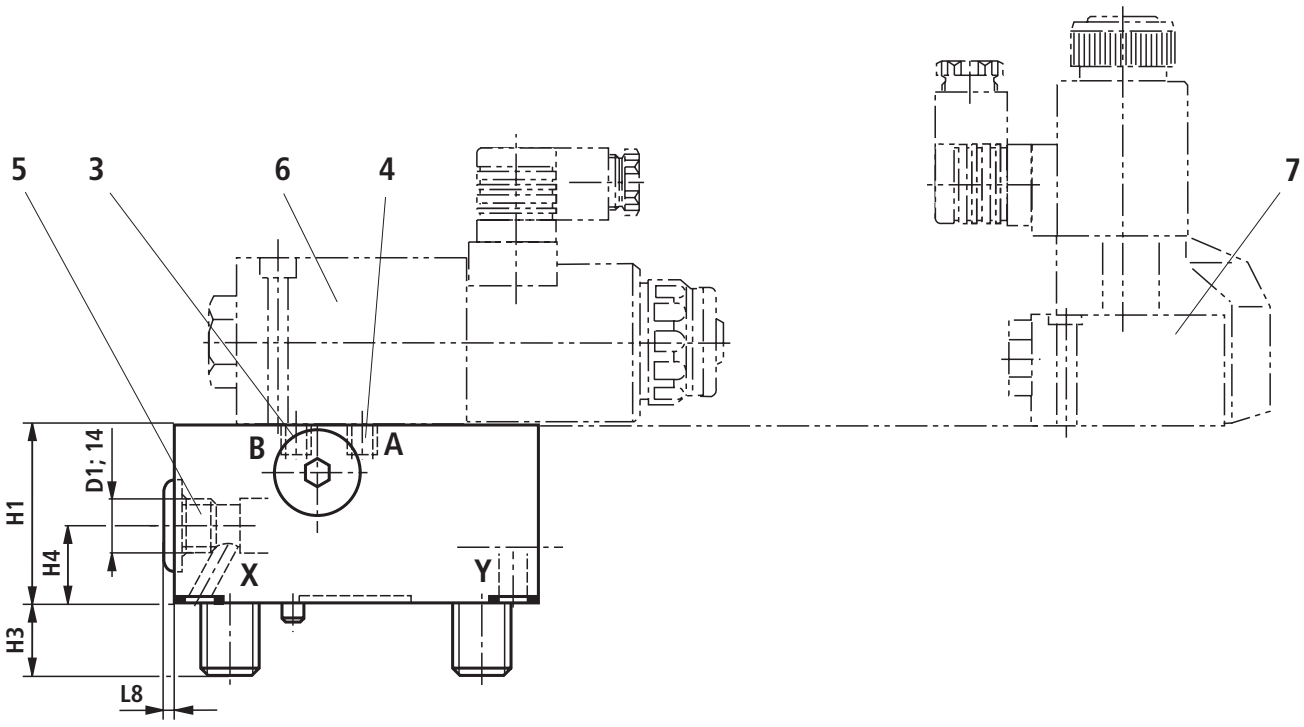

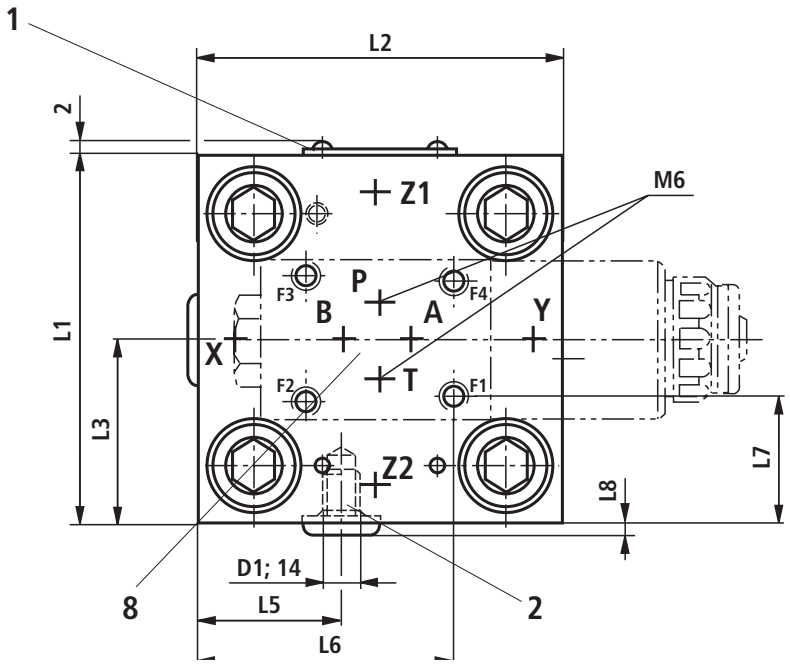

1 Name plate
2 Port X with NG32 optionally as threaded connection
3 Thread for orifice fitting B**
4 Thread for orifice fitting A**
5 Shuttle valve
6 Directional spool valve type 4WE 6 D... (pilot control valve), separate order, see page 15
7 Directional seat valve type M-3SEW 6 ... (pilot control valve), separate order, see page 15
8 Porting pattern according to ISO 4401-03-02-0-05 (mounting thread for version "/12" see data sheet 08936)

NG	16	25	32
D1	M6	M6	G1/4
H1	40	40	50
H2	–	–	–
H3	15	24	28
H4	–	–	–
L1	65	85	100
L2	80	85	100
L3	39.5	45.5	50
L4	–	–	–
L5	–	–	44
L6	47.2	64	71.5
L7	17	27	34.55
L8	3	3	5

☞ **Notice:**
The dimensions are nominal dimensions which are subject to tolerances.

Control cover "GWMA" for set-up of a directional valve: NG40 ... 50

01	02	03		04		05	06	07	08	09	10	11	12	13	14	15
LFA		**GWMA**	**–**	**7X**	**/**									**1)**	**1)**	**1)**

02		06	07	08	09
Size		**Orifice in the channel** (Ø in 1/10 mm)			
		A	**B**	**P**	**T**
40	**50**	A** ◿	B** ◿	P** ◿	T** ◿

◿ Orifice possible, if required, specifications have to be made

1) See "Ordering code for control cover type LFA..." page 14.

For ordering code of orifices, see page 95.

LFA . GWMA... (NG40 and 50)

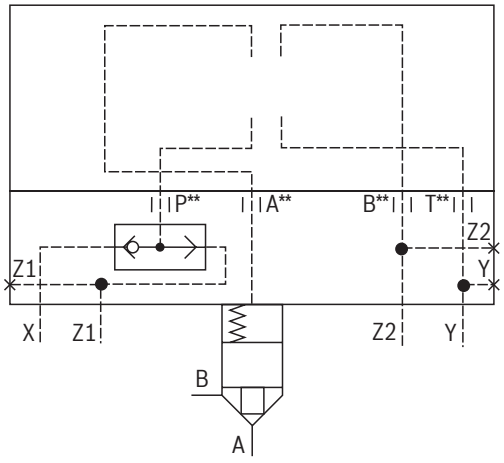

Control cover "GWMA" for set-up of a directional valve: NG40 ... 50
(dimensions in mm)

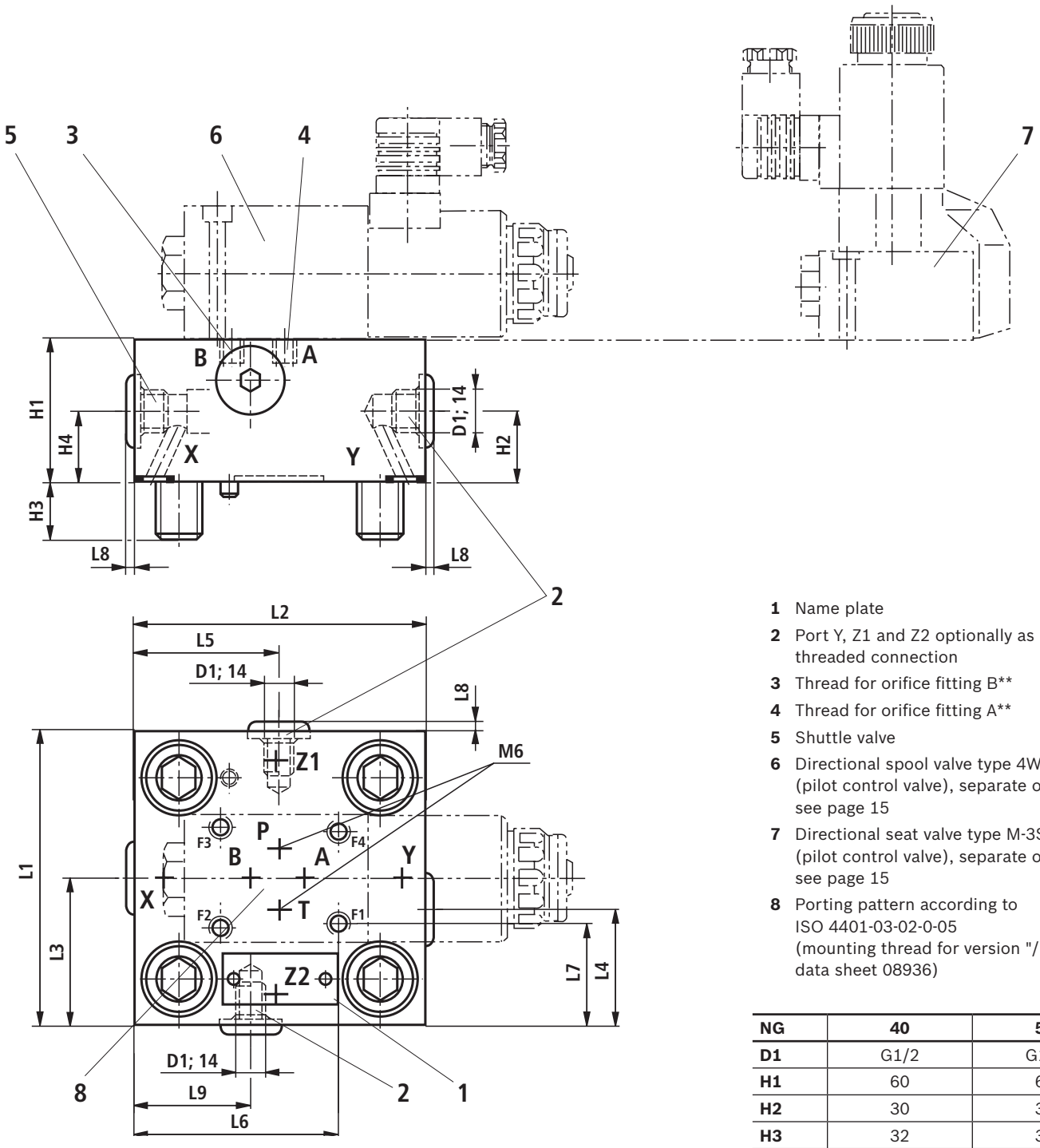

1 Name plate
2 Port Y, Z1 and Z2 optionally as threaded connection
3 Thread for orifice fitting B**
4 Thread for orifice fitting A**
5 Shuttle valve
6 Directional spool valve type 4WE 6 D... (pilot control valve), separate order, see page 15
7 Directional seat valve type M-3SEW 6 ... (pilot control valve), separate order, see page 15
8 Porting pattern according to ISO 4401-03-02-0-05 (mounting thread for version "/12" see data sheet 08936)

NG	40	50
D1	G1/2	G1/2
H1	60	68
H2	30	32
H3	32	34
H4	30	32
L1	125	140
L2	125	140
L3	62.5	78
L4	53	60
L5	62.5	72
L6	84	91.5
L7	47	54.5
L8	6	6
L9	53	64

☞ **Notice:**
The dimensions are nominal dimensions which are subject to tolerances.

Control cover "GWMA" for set-up of a directional valve: NG63

01	02	03		04		05	06	07	08	09	10	11	12	13	14	15
LFA	**63**	**GWMA**	**–**	**7X**	**/**									**1)**	**1)**	**1)**

06	07	08	09
Orifice in the channel (Ø in 1/10 mm)			
A	**B**	**P**	**T**
A** ◿	B** ◿	P** ◿	T** ◿

◿ Orifice possible, if required, specifications have to be made

1) See "Ordering code for control cover type LFA..." page 14.

For ordering code of orifices, see page 95.

LFA 63 GWMA...

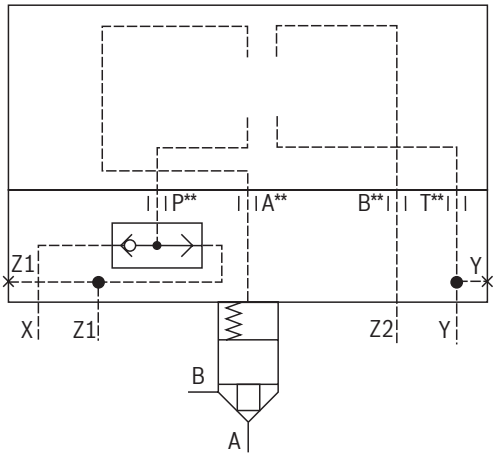

Control cover "GWMA" for set-up of a directional valve: NG63
(dimensions in mm)

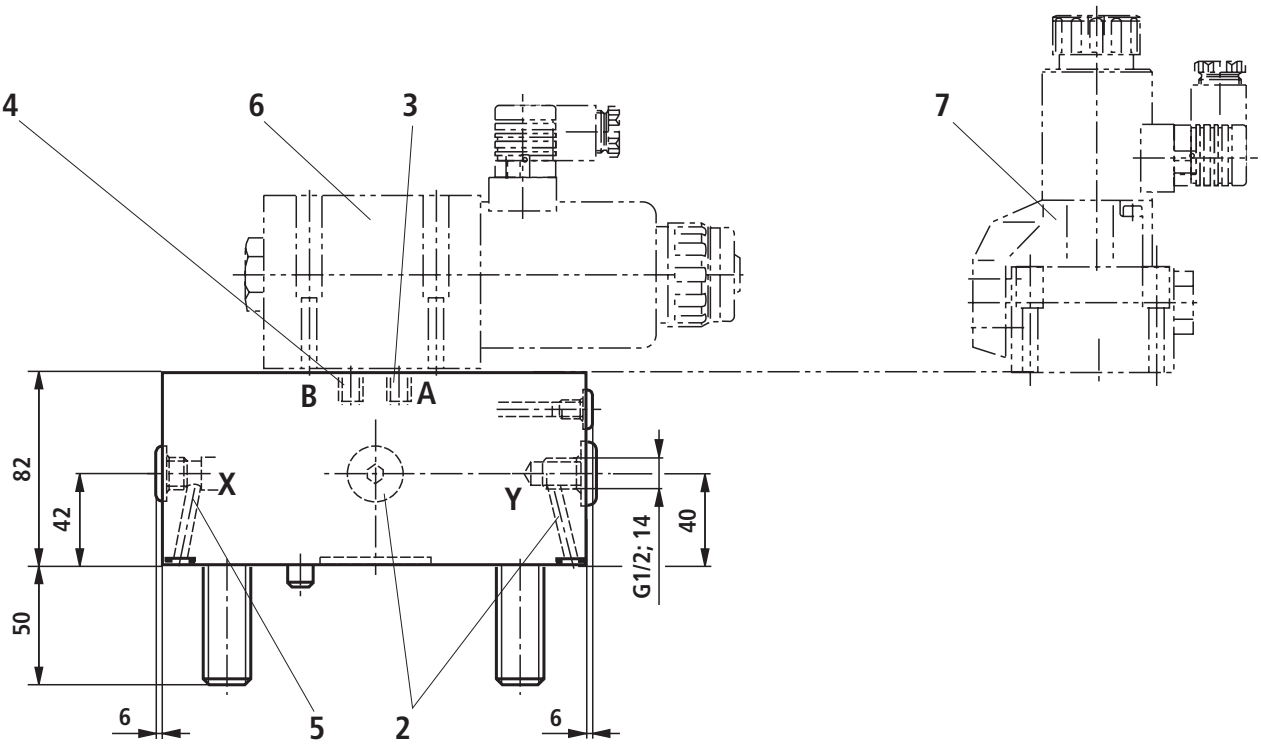

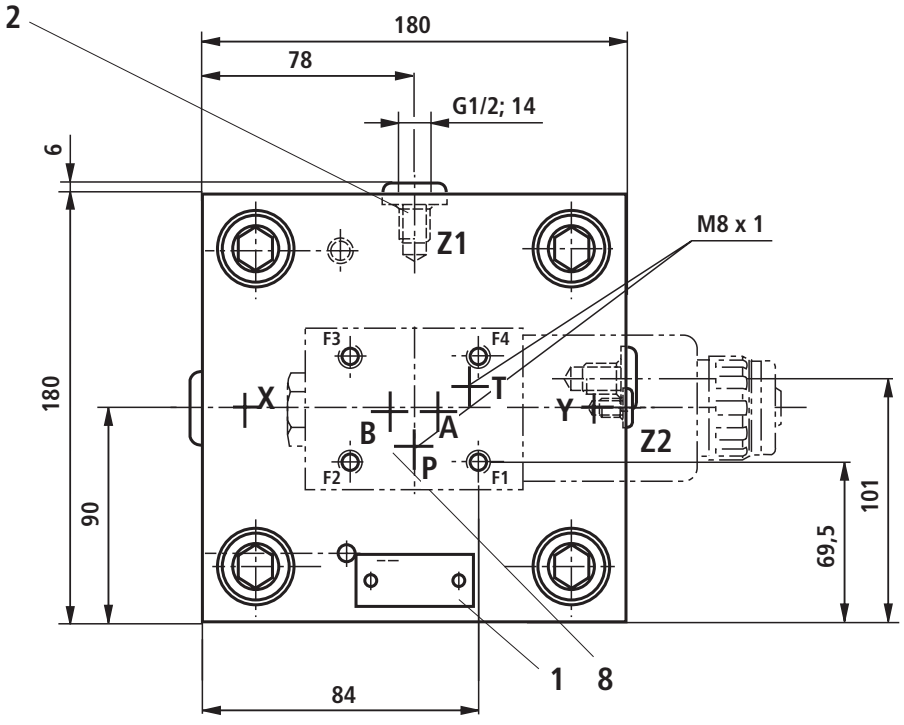

1 Name plate
2 Ports X, Y and Z1 optionally as threaded ports
3 Thread for orifice fitting B**
4 Thread for orifice fitting A**
5 Shuttle valve
6 Directional spool valve type 4WE 10 D... (pilot control valve), separate order, see page 15
7 Directional seat valve type M-3SEW 10 ... (pilot control valve), separate order, see page 15
8 Porting pattern according to ISO 4401-05-04-0-05 (mounting thread for version "/12" see data sheet 08936)

☞ **Notice:**
The dimensions are nominal dimensions which are subject to tolerances.

Control cover "GWMA" for set-up of a directional valve: NG80

01	02	03		04		05	06	07	08	09	10	11	12	13	14	15
LFA	**80**	**GWMA**	**–**	**6X**	**/**									**1)**	**1)**	**1)**

06	07	08	09
Orifice in the channel (Ø in 1/10 mm)			
A	**B**	**P**	**T**
A** ◿	B** ◿	P** ◿	T** ◿

◿ Orifice possible, if required, specifications have to be made

1) See "Ordering code for control cover type LFA..." page 14.

For ordering code of orifices, see page 95.

LFA 80 GWMA...

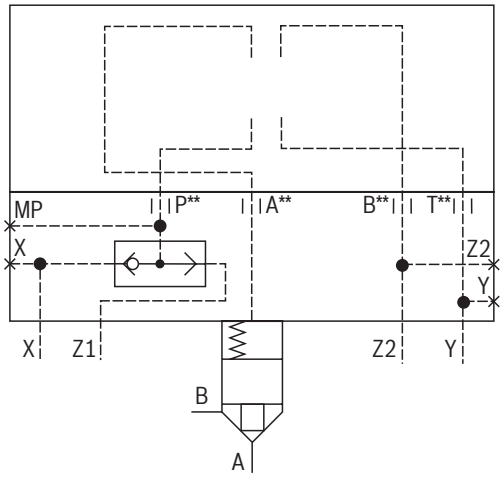

Control cover "GWMA" for set-up of a directional valve: NG80
(dimensions in mm)

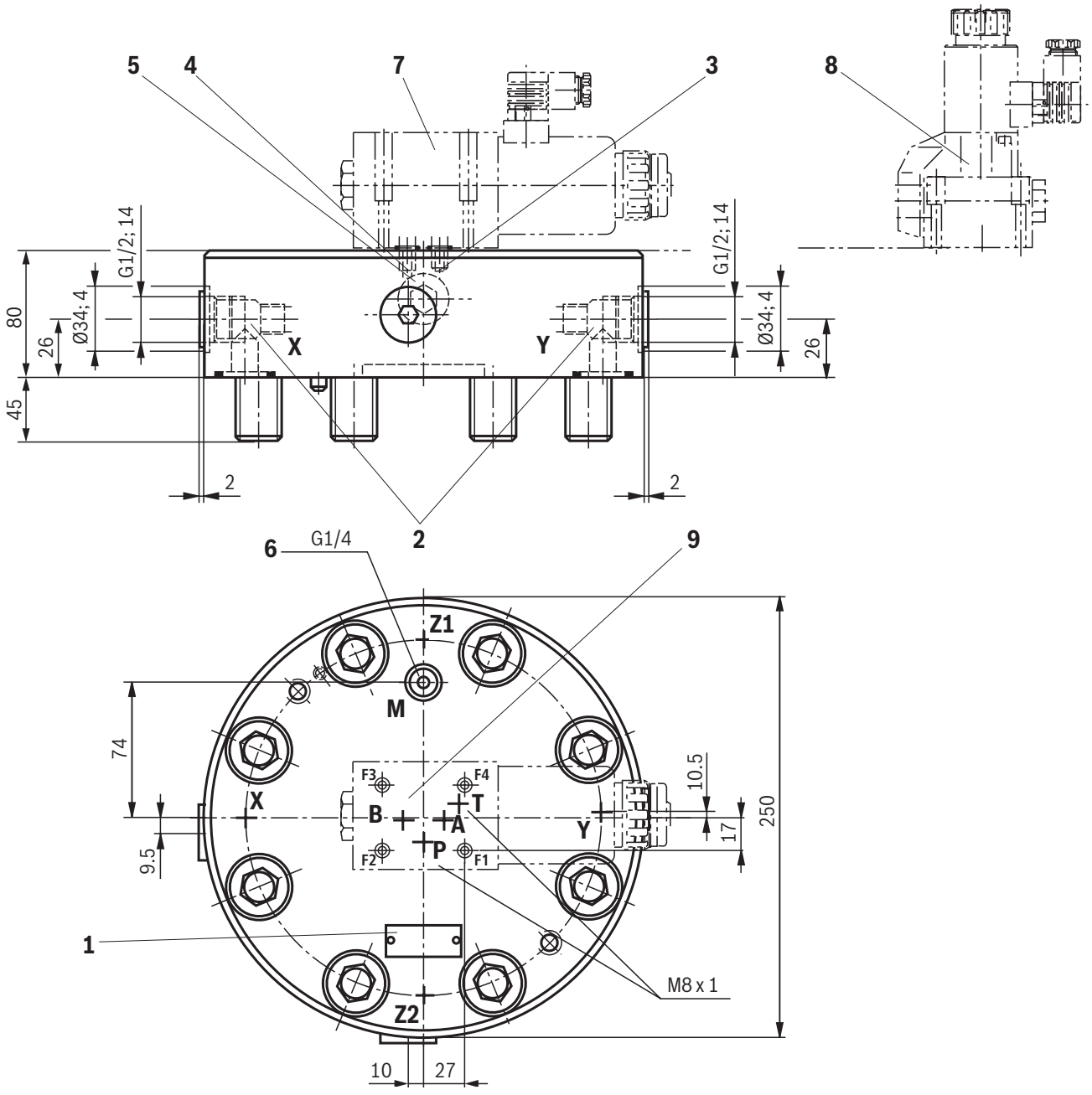

1 Name plate
2 Ports X, Y and Z2 optionally as threaded ports
3 Thread for orifice fitting B**
4 Thread for orifice fitting A**
5 Shuttle valve
6 Measuring port
7 Directional spool valve type 4WE 10 D... (pilot control valve), separate order, see page 15
8 Directional seat valve type M-3SEW 10 ... (pilot control valve), separate order, see page 15
9 Porting pattern according to ISO 4401-05-04-0-05 (mounting thread for version "/12" see data sheet 08936)

☞ **Notice:**
The dimensions are nominal dimensions which are subject to tolerances.

Control cover "GWMA20" for set-up of a directional valve: NG16

01	02	03		04		05	06	07	08	09	10	11	12	13	14	15
LFA	**16**	**GWMA20**	**–**	**7X**	**/**									**1)**	**1)**	**1)**

06	07	08	09
Orifice in the channel (Ø in 1/10 mm)			
A	**B**	**P**	**T**
A** ◿	B** ◿	P** ◿	T** ◿

◿ Orifice possible, if required, specifications have to be made

1) See "Ordering code for control cover type LFA..." page 14.

For ordering code of orifices, see page 95.

LFA 16 GWMA20...

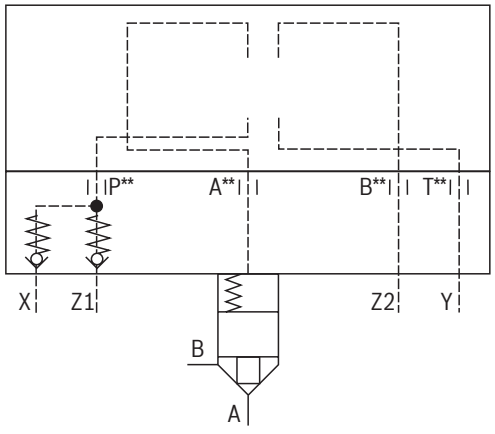

Control cover "GWMA20" for set-up of a directional valve: NG16
(dimensions in mm)

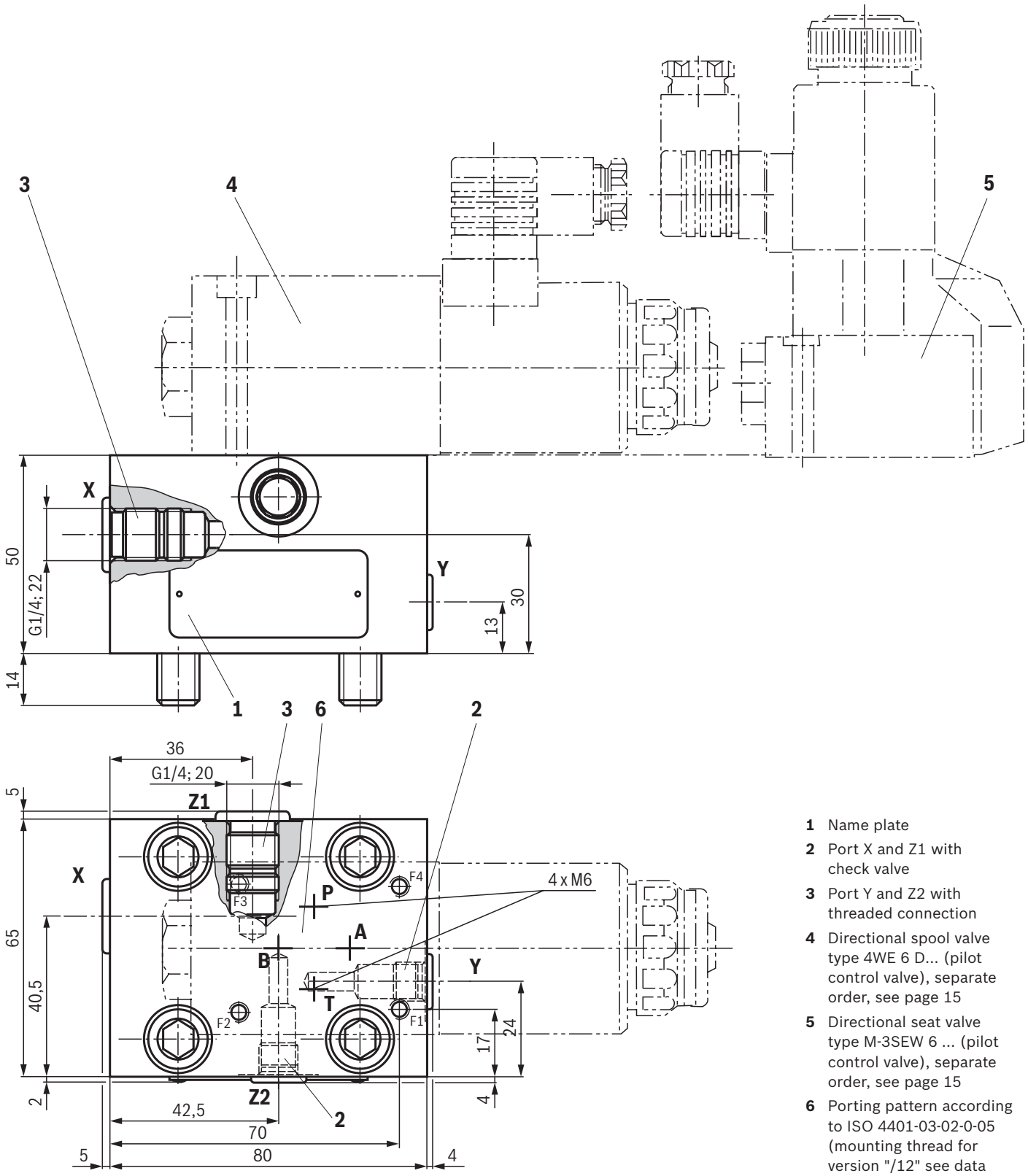

1 Name plate
2 Port X and Z1 with check valve
3 Port Y and Z2 with threaded connection
4 Directional spool valve type 4WE 6 D... (pilot control valve), separate order, see page 15
5 Directional seat valve type M-3SEW 6 ... (pilot control valve), separate order, see page 15
6 Porting pattern according to ISO 4401-03-02-0-05 (mounting thread for version "/12" see data sheet 08936)

☞ **Notice:**
The dimensions are nominal dimensions which are subject to tolerances.

Control cover "GWMA20" for set-up of a directional valve: NG25 ... 40

01	02	03		04		05	06	07	08	09	10	11	12	13	14	15
LFA		**GWMA20**	**–**	**7X**	**/**									**1)**	**1)**	**1)**

02			06	07	08	09
Size			**Orifice in the channel** (Ø in 1/10 mm)			
			A	**B**	**P**	**T**
25	**32**	**40**	A** ◿	B** ◿	P** ◿	T** ◿

◿ Orifice possible, if required, specifications have to be made

1) See "Ordering code for control cover type LFA..." page 14.

For ordering code of orifices, see page 95.

LFA . GWMA20... (NG25 ... 40)

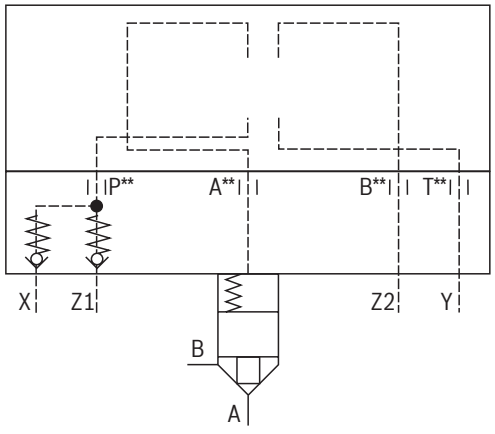

Control cover "GWMA20" for set-up of a directional valve: NG25 ... 40
(dimensions in mm)

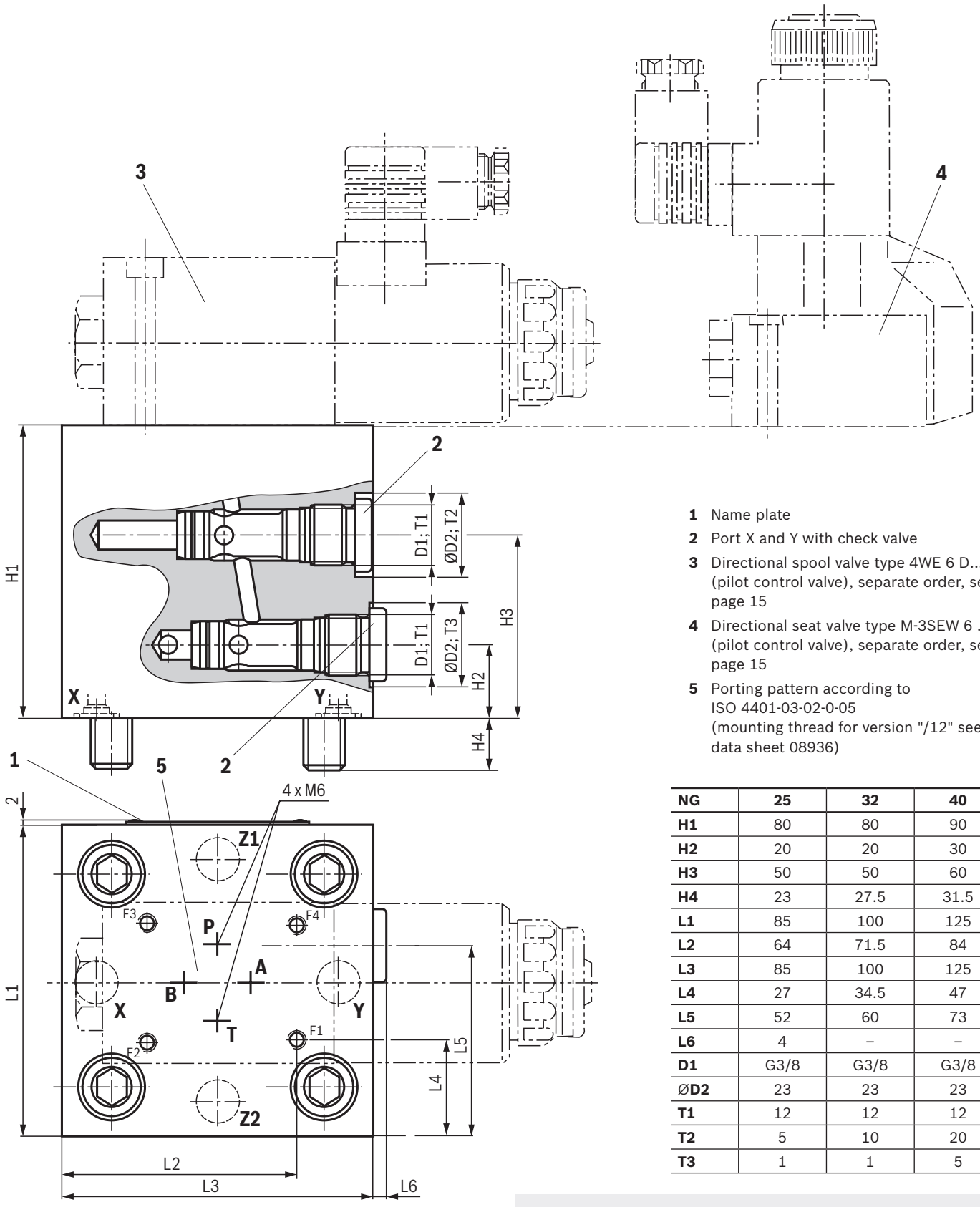

1 Name plate

2 Port X and Y with check valve

3 Directional spool valve type 4WE 6 D... (pilot control valve), separate order, see page 15

4 Directional seat valve type M-3SEW 6 ... (pilot control valve), separate order, see page 15

5 Porting pattern according to ISO 4401-03-02-0-05 (mounting thread for version "/12" see data sheet 08936)

NG	25	32	40
H1	80	80	90
H2	20	20	30
H3	50	50	60
H4	23	27.5	31.5
L1	85	100	125
L2	64	71.5	84
L3	85	100	125
L4	27	34.5	47
L5	52	60	73
L6	4	–	–
D1	G3/8	G3/8	G3/8
ØD2	23	23	23
T1	12	12	12
T2	5	10	20
T3	1	1	5

Notice:
The dimensions are nominal dimensions which are subject to tolerances.

Control cover "GWMA20" for set-up of a directional valve: NG50 and 63

01	02	03		04		05	06	07	08	09	10	11	12	13	14	15
LFA		**GWMA20**	**–**	**7X**	**/**									**1)**	**1)**	**1)**

02		06	07	08	09
Size		**Orifice in the channel** (Ø in 1/10 mm)			
		A	**B**	**P**	**T**
50	**63**	A** ◿	B** ◿	P** ◿	T** ◿

◿ Orifice possible, if required, specifications have to be made

1) See "Ordering code for control cover type LFA..." page 14.

For ordering code of orifices, see page 95.

LFA . GWMA20... (NG50 and 63)

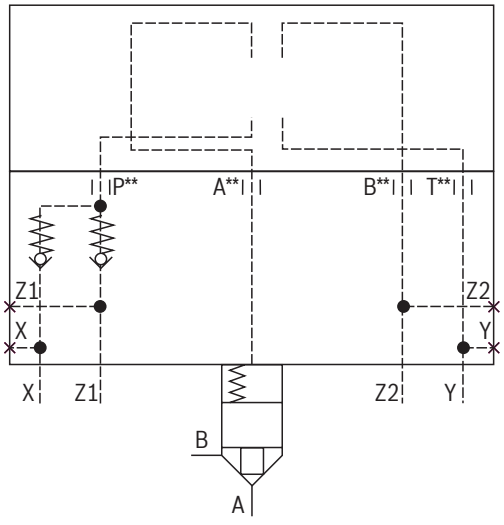

Control cover "GWMA20" for set-up of a directional valve: NG50 and 63
(dimensions in mm)

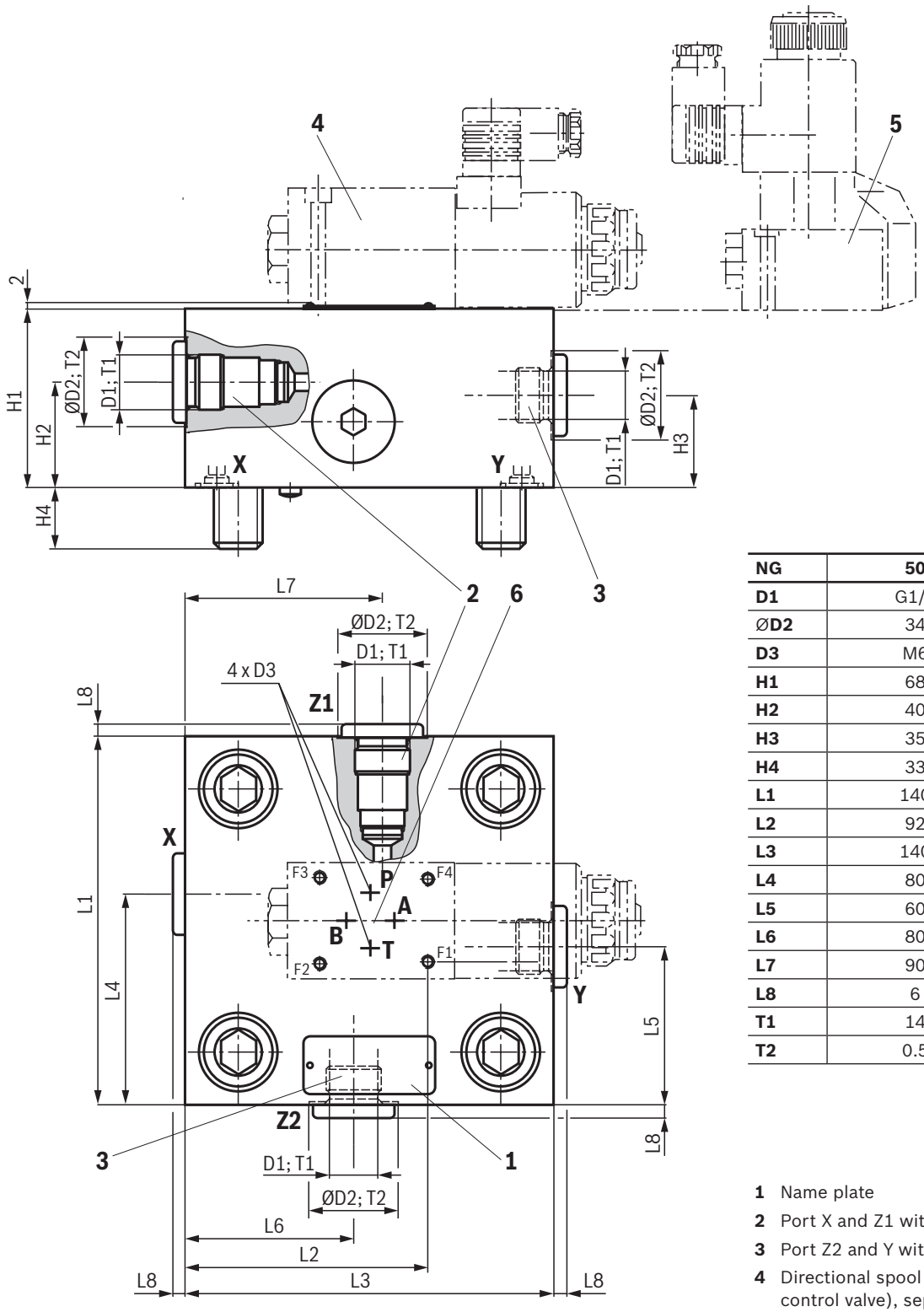

NG	50	63
D1	G1/2	G1/2
ØD2	34	34
D3	M6	M8x1
H1	68	82
H2	40	48
H3	35	63
H4	33	68
L1	140	180
L2	92	120.5
L3	140	180
L4	80	99
L5	60	81
L6	80	80
L7	90	90
L8	6	6
T1	14	14
T2	0.5	0.5

1 Name plate
2 Port X and Z1 with check valve
3 Port Z2 and Y with threaded connection
4 Directional spool valve type 4WE 6 D... (pilot control valve), separate order, see page 15
5 Directional seat valve type M-3SEW 6 ... (pilot control valve), separate order, see page 15
6 Porting pattern according to ISO 4401-03-02-0-05
(mounting thread for version "/12" see data sheet 08936)

☞ **Notice:**
The dimensions are nominal dimensions which are subject to tolerances.

Control cover "GWMA20" for set-up of a directional valve: NG80 and 100

01	02	03		04		05	06	07	08	09	10	11	12	13	14	15
LFA		**GWMA20**	**–**	**7X**	**/**									**1)**	**1)**	**1)**

02		06	07	08	09
Size		**Orifice in the channel** (Ø in 1/10 mm)			
		A	**B**	**P**	**T**
80	**100**	A** ◿	B** ◿	P** ◿	T** ◿

◿ Orifice possible, if required, specifications have to be made

1) See "Ordering code for control cover type LFA..." page 14.

For ordering code of orifices, see page 95.

LFA . GWMA20... (NG80 and 100)

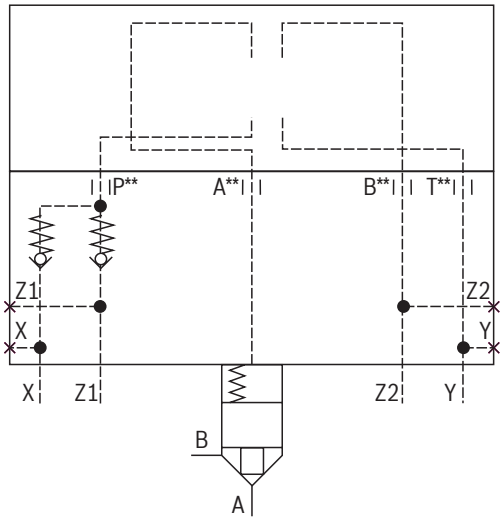

Control cover "GWMA20" for set-up of a directional valve: NG80 and 100
(dimensions in mm)

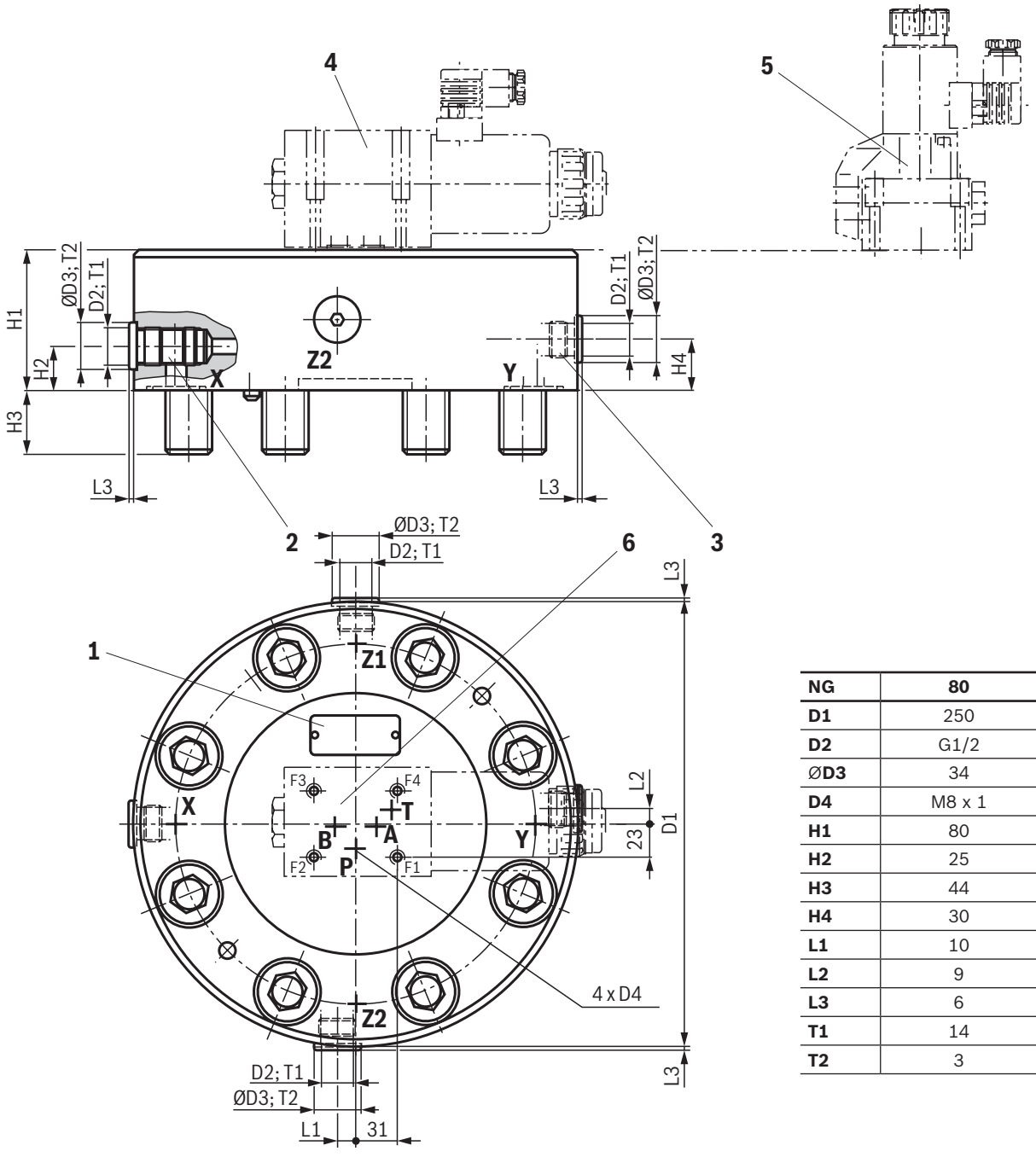

NG	80	100
D1	250	300
D2	G1/2	G1/2
ØD3	34	34
D4	M8 x 1	G1/8
H1	80	110
H2	25	30
H3	44	51.5
H4	30	35
L1	10	10
L2	9	9
L3	6	6
T1	14	14
T2	3	3

☞ **Notice:**
The dimensions are nominal dimensions which are subject to tolerances.

1 Name plate
2 Port X and Z1 with check valve
3 Port Y and Z2 with threaded connection
4 Directional spool valve type 4WE 10 D... (pilot control valve), separate order, see page 15
5 Directional seat valve type M-3SEW 10 ... (pilot control valve), separate order, see page 15
6 Porting pattern according to ISO 4401-05-04-0-05 (mounting thread for version "/12" see data sheet 08936)

Control cover "KWA" and "KWB" for set-up of a directional valve: NG16 ... 50

01	02	03	04		05	06	07	08	09	10	11	12	13	14	15
LFA			**–**	**7X**	**/**								**1)**	**1)**	**1)**

02	03	06	07	08	09	10
Size	**Type**	**Orifice in the channel** (Ø in 1/10 mm)				
		A	**B**	**P**	**T**	**X**
16	**KWA**	A**		P15	T**	X15
25		A**		P15	T**	Ø2.0
32		A**		P20	T**	Ø2.5
40		A**		P20	T**	X30
50		A**		P20	T**	X30
16	**KWB**		B**	P15	T**	X15
25			B**	P15	T**	Ø2.0
32			B**	P20	T**	Ø2.5
40			B**	P20	T**	X30
50			B**	P20	T**	X30

◿ Orifice possible, if required, specifications have to be made
◢ Orifice bored (Ø in mm) (does not appear in the type designation)
◿ Standard orifice (Ø in 1/10 mm) (does not appear in the type designation)
1) See "Ordering code for control cover type LFA..." page 14.
For ordering code of orifices, see page 95.

LFA . KWA... (NG16 ... 32)

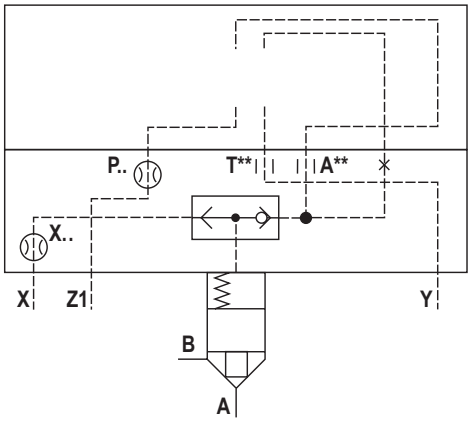

LFA . KWB... (NG16 ... 32)

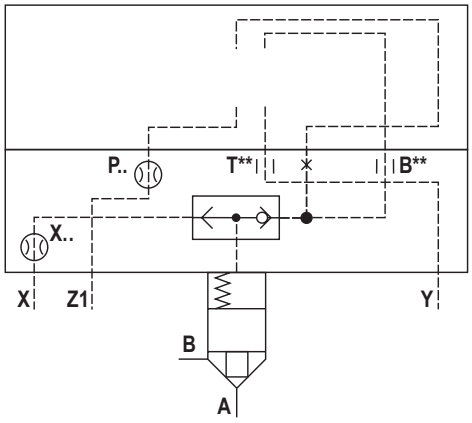

LFA . KWA... (NG40 and 50)

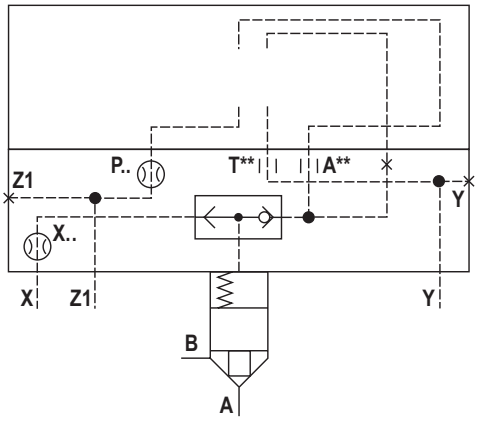

LFA . KWB... (NG40 and 50)

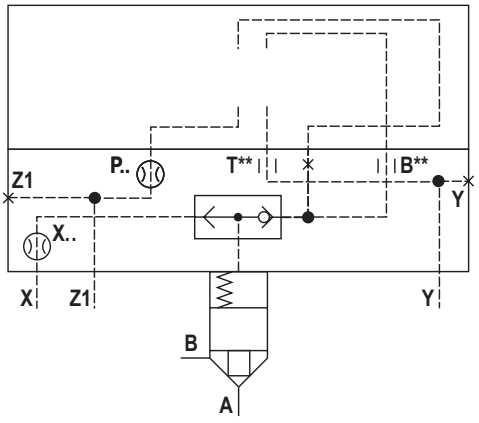

Control cover "KWA" and "KWB" for set-up of a directional valve: NG16 ... 50
(dimensions in mm)

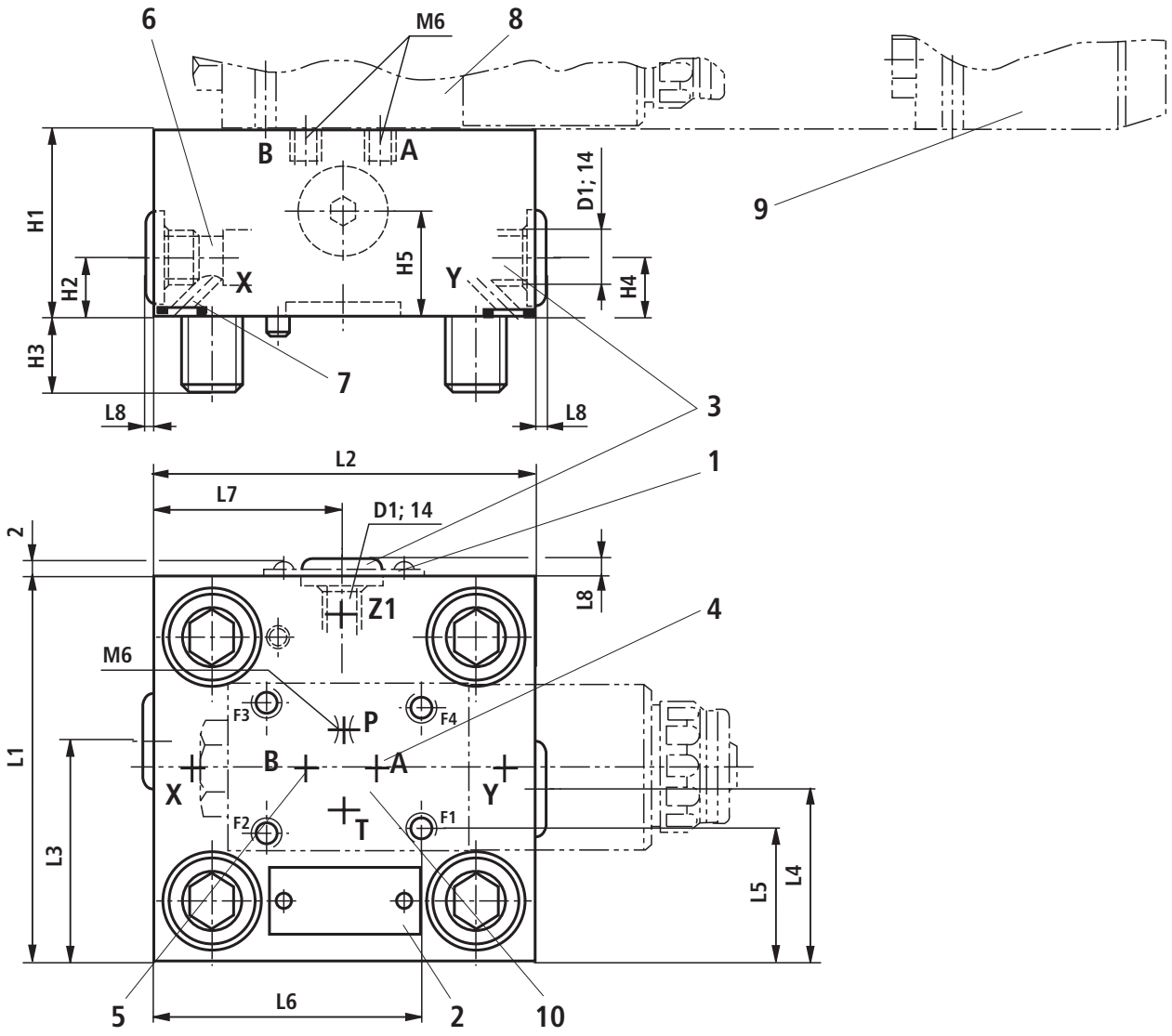

1 Name plate at NG16, 25 and 32
2 Name plate at NG40 and 50
3 Ports Y and Z1
optionally as threaded ports at NG40 and 50
4 Plug screw type KWB
5 Plug screw type KWA
6 Shuttle valve
7 M6 at NG16 and 40, M8 x 1 at NG50
8 Directional spool valve type 4WE 6 D... (pilot control valve), separate order, see page 15
9 Directional seat valve type M-3SEW 6 ... (pilot control valve), separate order, see page 15
10 Porting pattern according to ISO 4401-03-02-0-05 (mounting thread for version "/12" see data sheet 08936)

NG	16	25	32	40	50
D1	–	–	–	G1/2	G1/2
H1	40	40	50	60	68
H2	17	17	21.5	30	32
H3	15	24	28	32	34
H4	–	–	–	30	32
H5	–	–	–	30	50
L1	65	85	100	125	140
L2	80	85	100	125	140
L3	36.5	45.5	50	62.5	72
L4	–	–	–	53	60
L5	17	27	34.5	47	54.5
L6	47.5	64	71.5	84	91.5
L7	–	–	–	62.5	70
L8	4	4	4	6	6

☞ **Notice:**
The dimensions are nominal dimensions which are subject to tolerances.

Control cover "KWA" and "KWB" for set-up of a directional valve: NG63

01	02	03		04		05	06	07	08	09	10	11	12	13	14	15
LFA	**63**		**–**	**6X**	**/**									**1)**	**1)**	**1)**

03	06	07	08	09	10
Type	**Orifice in the channel** (Ø in 1/10 mm)				
	A	**B**	**P**	**T**	**X**
KWA	A** ◿		P25 ◿	T** ◿	X** ◿
KWB		B** ◿	P25 ◿	T** ◿	X** ◿

◿ Orifice possible, if required, specifications have to be made

◿ Standard orifice (Ø in 1/10 mm) (does not appear in the type designation)

1) See "Ordering code for control cover type LFA..." page 14.

For ordering code of orifices, see page 95.

LFA 63 KWA...

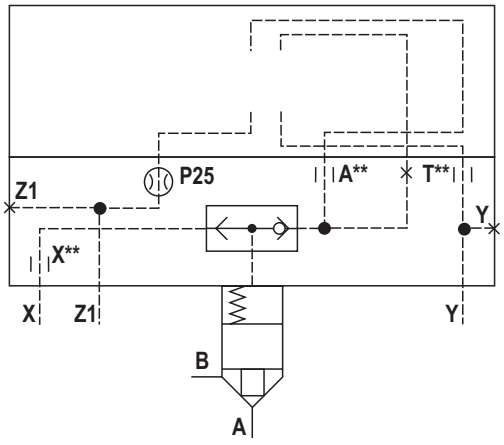

LFA 63 KWB...

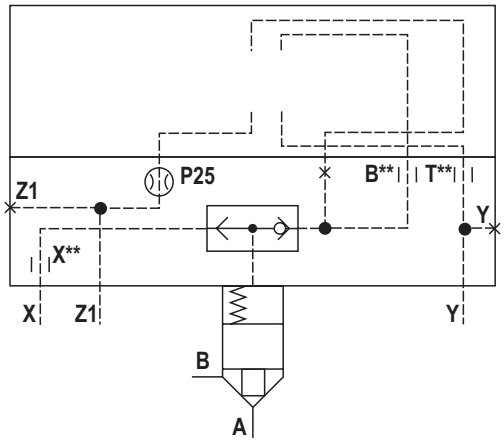

Control cover "KWA" and "KWB" for set-up of a directional valve: NG63
(dimensions in mm)

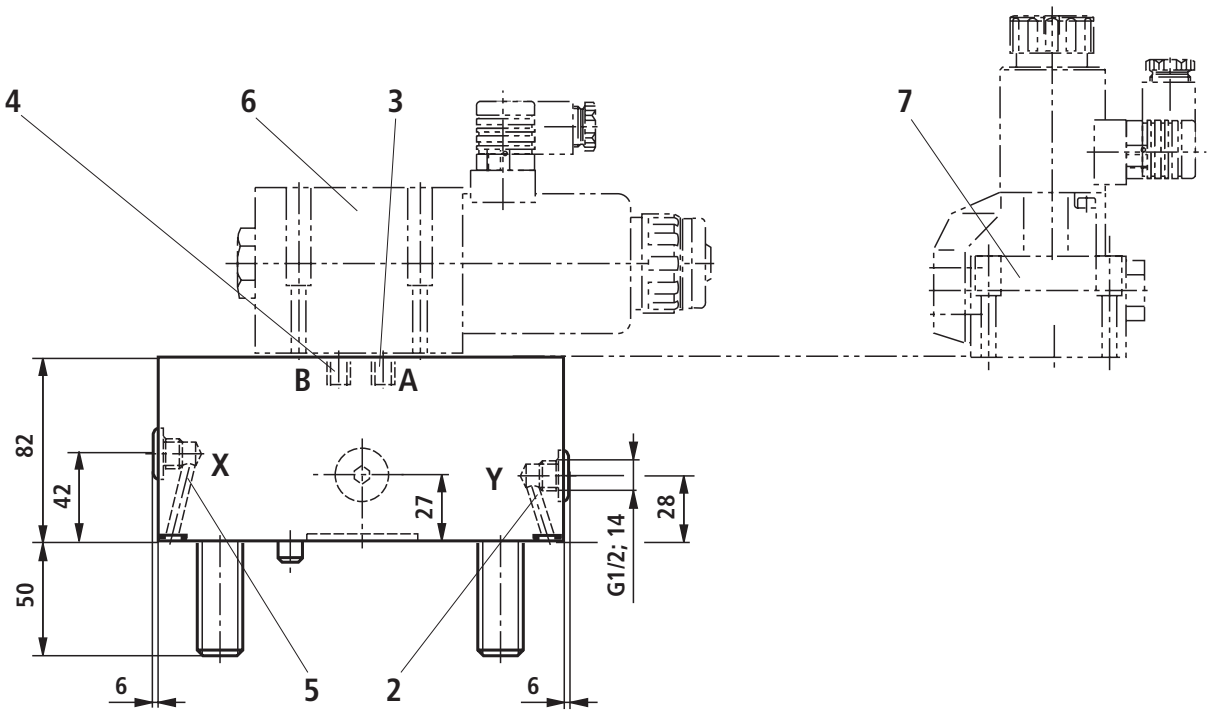

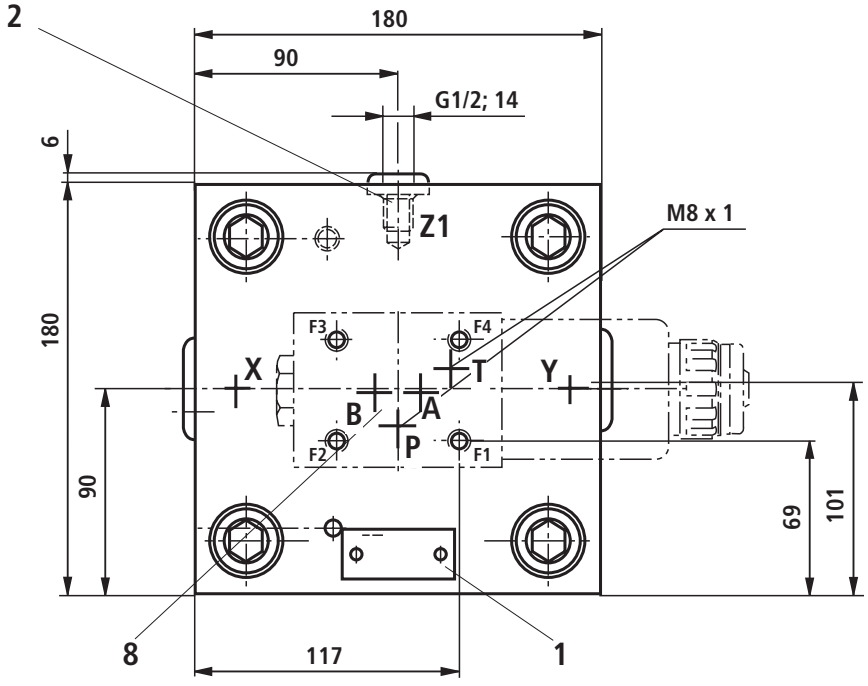

1 Name plate

2 Ports Y and Z1 optionally as threaded ports

3 Plug screw M8 x 1 at type KWB

4 Plug screw M8 x 1 at type KWA

5 Shuttle valve

6 Directional spool valve type 4WE 10 D... (pilot control valve), separate order, see page 15

7 Directional seat valve type M-3SEW 10 ... (pilot control valve), separate order, see page 15

8 Porting pattern according to ISO 4401-05-04-0-05 (mounting thread for version "/12" see data sheet 08936)

☞ **Notice:**
The dimensions are nominal dimensions which are subject to tolerances.

Control cover "KWA" and "KWB" for set-up of a directional valve: NG80 ... 100

01	02	03	04		05	06	07	08	09	10	11	12	13	14	15
LFA			**–**	**6X**	**/**								**1)**	**1)**	**1)**

		03	06	07	08	09	10
Size		**Type**	**Orifice in the channel** (Ø in 1/10 mm)				
			A	**B**	**P**	**T**	**X**
80	**100**	**KWA**	A** ◿		P25 ◿	T** ◿	X20 ◿
		KWB		B** ◿	P25 ◿	T** ◿	X20 ◿

◿ Orifice possible, if required, specifications have to be made

◿ Standard orifice (Ø in 1/10 mm) (does not appear in the type designation)

1) See "Ordering code for control cover type LFA..." page 14.

For ordering code of orifices, see page 95.

LFA . KWA... (NG80 ... 100)

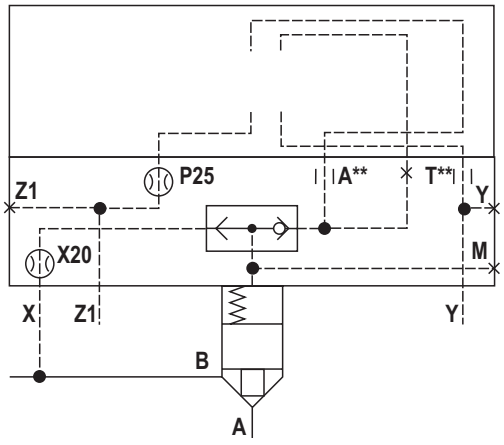

LFA . KWB... (NG80 ... 100)

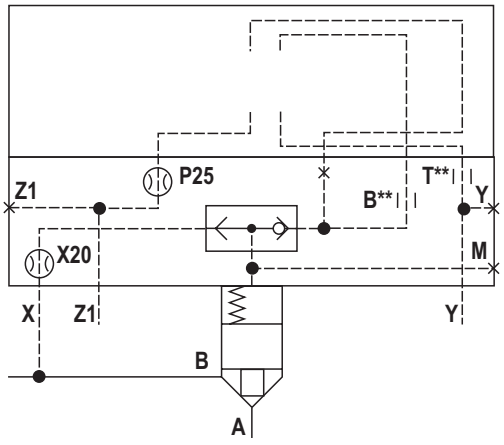

Control cover "KWA" and "KWB" for set-up of a directional valve: NG80 ... 100
(dimensions in mm)

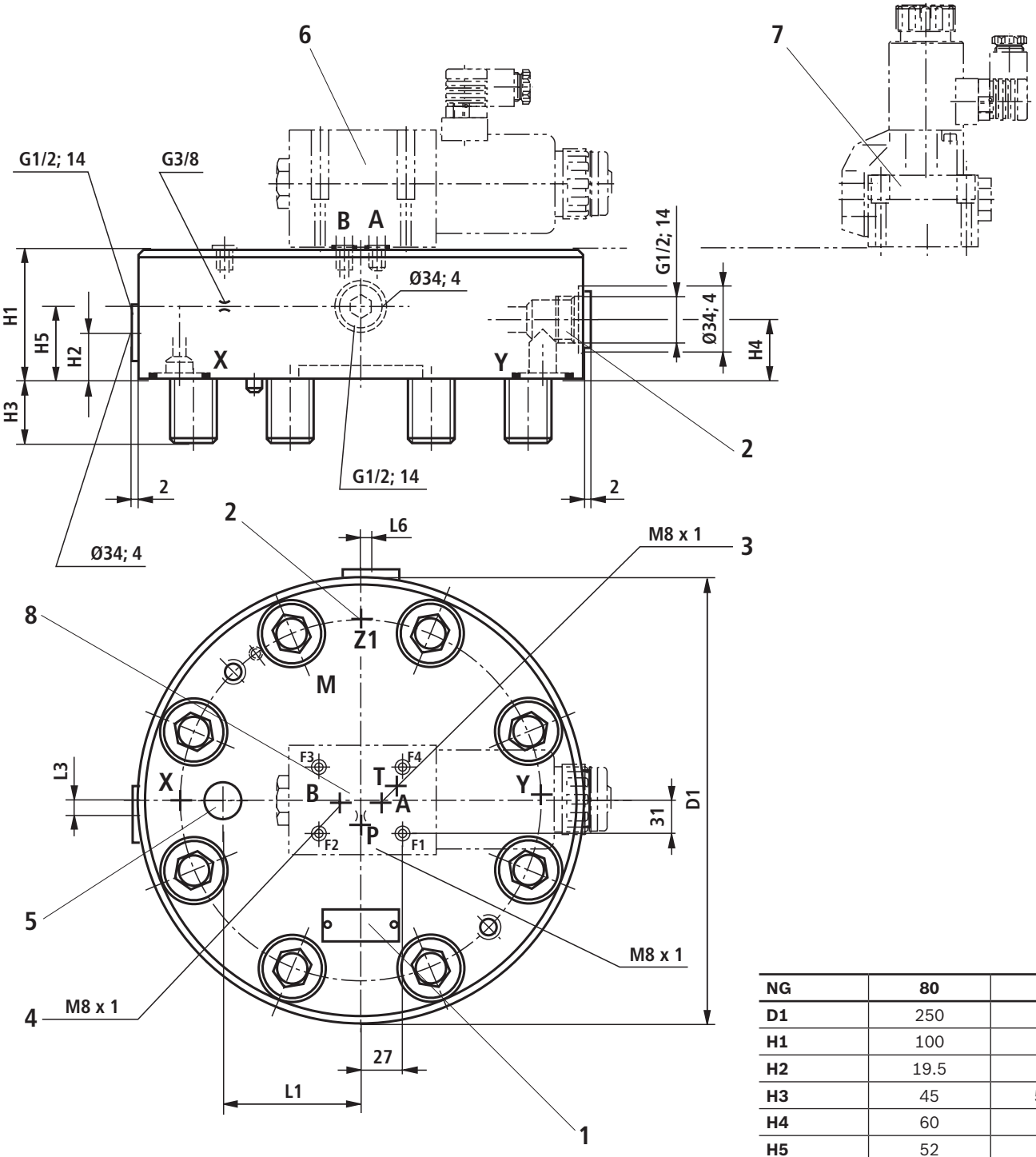

NG	80	100
D1	250	300
H1	100	110
H2	19.5	27
H3	45	52.5
H4	60	70
H5	52	62
L1	55	62
L3	6.5	5
L6	6.5	2

1 Name plate
2 Ports Y and Z1 optionally as threaded ports
3 Plug screw for type KWB
4 Plug screw for type KWA
5 Shuttle valve
6 Directional spool valve type 4WE 10 D... (pilot control valve), separate order, see page 15
7 Directional seat valve type M-3SEW 10 ... (pilot control valve), separate order, see page 15
8 Porting pattern according to ISO 4401-05-04-0-05 (mounting thread for version "/12" see data sheet 08936)

☞ **Notice:**
The dimensions are nominal dimensions which are subject to tolerances.

Control cover "KWMA" for set-up of a directional valve: NG16 ... 32

01	02	03		04		05	06	07	08	09	10	11	12	13	14	15
LFA		**KWMA**	**–**	**7X**	**/**									**1)**	**1)**	**1)**

02	06	07	08	09	10
Size	**Orifice in the channel** (Ø in 1/10 mm)				
	A	**B**	**P**	**T**	**X**
16	A** ◿	B** ◿	P15 ◿	T** ◿	X15 ◿
25	A** ◿	B** ◿	P** ◿	T** ◿	Ø2.0 ◿
32	A** ◿	B** ◿	P** ◿	T** ◿	Ø2.5 ◿

◿ Orifice possible, if required, specifications have to be made

1) See "Ordering code for control cover type LFA..." page 14.

For ordering code of orifices, see page 95.

LFA 16 KWMA...

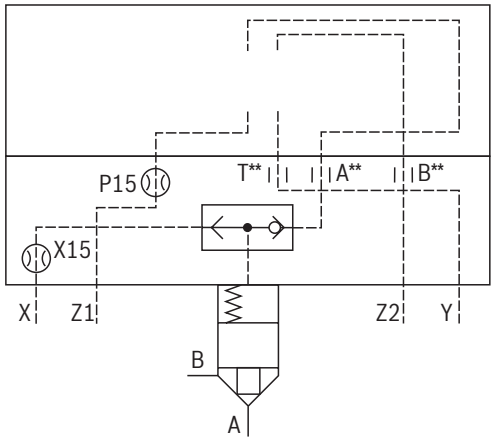

LFA . KWMA... (NG25 and 32)

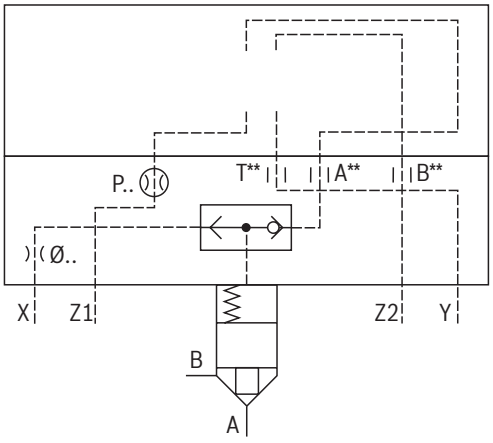

Control cover "KWMA" for set-up of a directional valve: NG16 ... 32
(dimensions in mm)

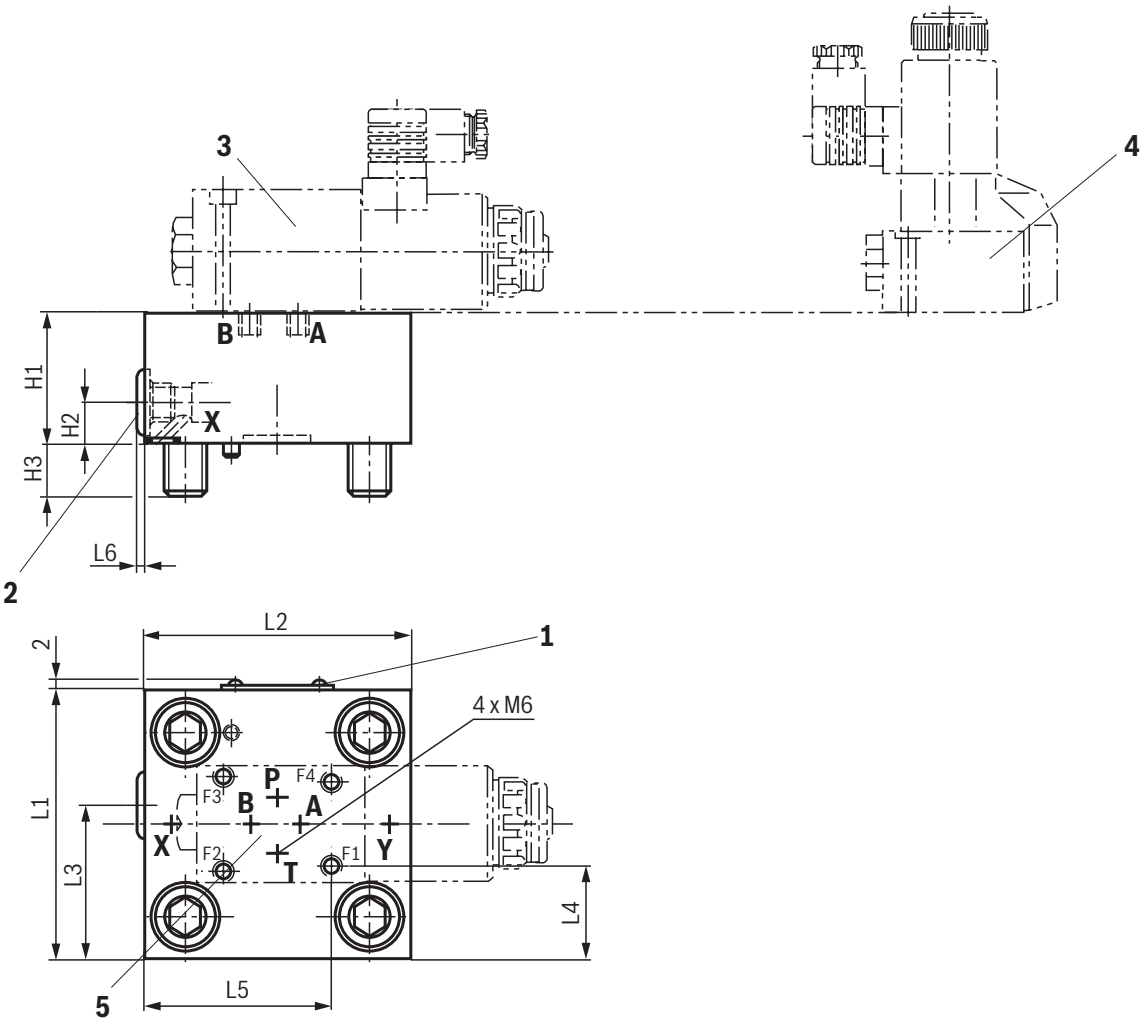

1 Name plate
2 Shuttle valve
3 Directional spool valve type 4WE 6 D... (pilot control valve), separate order, see page 15
4 Directional seat valve type M-3SEW 6 ... (pilot control valve), separate order, see page 15
5 Porting pattern according to ISO 4401-03-02-0-05 (mounting thread for version "/12" see data sheet 08936)

NG	16	25	32
H1	40	40	50
H2	17	17	21.5
H3	14	23	27.5
L1	65	85	100
L2	80	85	100
L3	36.5	45.5	50
L4	17	27	34.5
L5	47.5	64	71.5
L6	4	4	4

☞ **Notice:**
The dimensions are nominal dimensions which are subject to tolerances.

Control cover "KWMA" for set-up of a directional valve: NG40 ... 63

01	02	03		04		05	06	07	08	09	10	11	12	13	14	15
LFA		**KWMA**	**–**	**7X**	**/**									**1)**	**1)**	**1)**

02	06	07	08	09	10
Size	**Orifice in the channel** (Ø in 1/10 mm)				
	A	**B**	**P**	**T**	**X**
40	A** ◿	B** ◿	P20 ◿	T** ◿	X30 ◿
50	A** ◿	B** ◿	P20 ◿	T** ◿	X30 ◿
63	A** ◿	B** ◿	P25 ◿	T** ◿	X** ◿

◿ Orifice possible, if required, specifications have to be made

1) See "Ordering code for control cover type LFA..." page 14.

For ordering code of orifices, see page 95.

LFA . KWMA... (NG40 and 50)

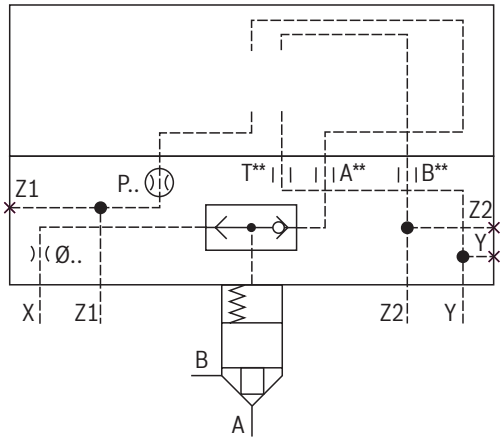

LFA 63 KWMA...

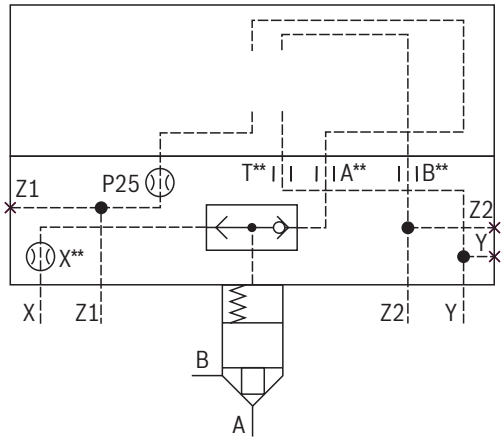

Control cover "KWMA" for set-up of a directional valve: NG40 ... 63
(dimensions in mm)

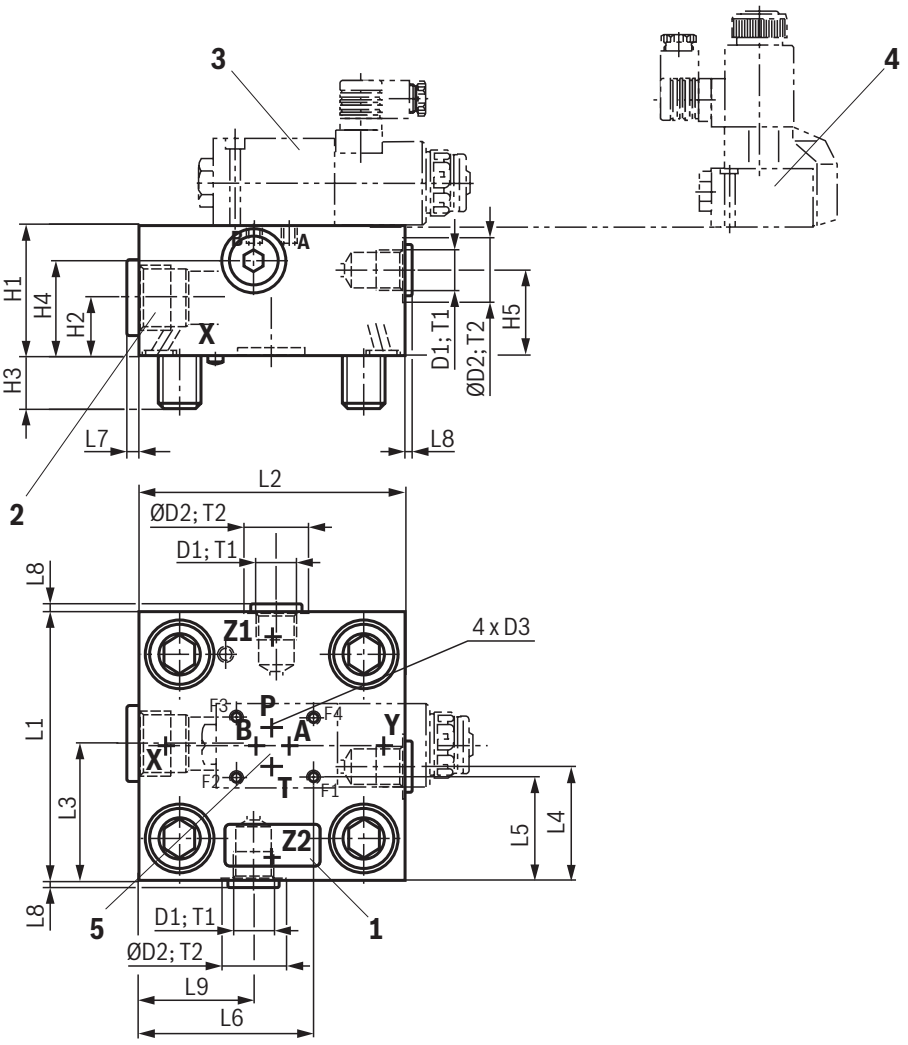

1 Name plate

2 Shuttle valve

3 Directional spool valve (pilot control valve)
- ▶ NG40 and 50: Type 4WE 6 D...
- ▶ NG63: Type 4WE 10 D...,

separate order, see page 15

4 Directional seat valve (pilot control valve)
- ▶ NG40 and 50: Type M-3SEW 6 ...
- ▶ NG63: Type M-3SEW 10 ...,

separate order, see page 15

5 Porting pattern according to ISO 4401-03-02-0-05 (NG40 and 50) or ISO 4401-05-04-0-05 (NG63)
(mounting thread for version "/12" see data sheet 08936)

NG	40	50	63
D1	G1/2	G1/2	G1/2
ØD2	34	34	34
D3	M6	M6	M8
H1	60	68	82
H2	30	31	42
H3	31.5	33.5	49
H4	41	45	60
H5	30	50	28
L1	125	140	180
L2	125	140	180
L3	62.5	72	90
L4	53	60	101
L5	47	54.5	68.5
L6	84	91.5	117
L7	4	6	5
L8	6	6	6
T1	14	14	14
T2	1	1	1

☞ **Notice:**
The dimensions are nominal dimensions which are subject to tolerances.

Control cover "KWMA" for set-up of a directional valve: NG80 and 100

01	02	03	04		05	06	07	08	09	10	11	12	13	14	15
LFA		**KWMA**	**–**	**7X**	**/**								**1)**	**1)**	**1)**

02		06	07	08	09	10
Size		**Orifice in the channel** (Ø in 1/10 mm)				
		A	**B**	**P**	**T**	**X**
80	**100**	A** ◿	B** ◿	P25 ◿	T** ◿	X20 ◿

◿ Orifice possible, if required, specifications have to be made

1) See "Ordering code for control cover type LFA..." page 14.

For ordering code of orifices, see page 95.

LFA . KWMA... (NG80 and 100)

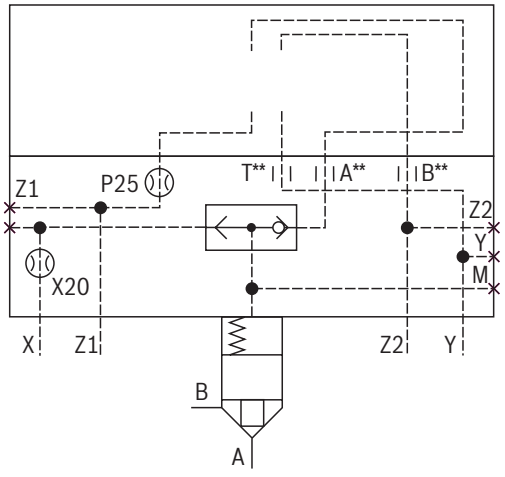

Control cover "KWMA" for set-up of a directional valve: NG80 and 100
(dimensions in mm)

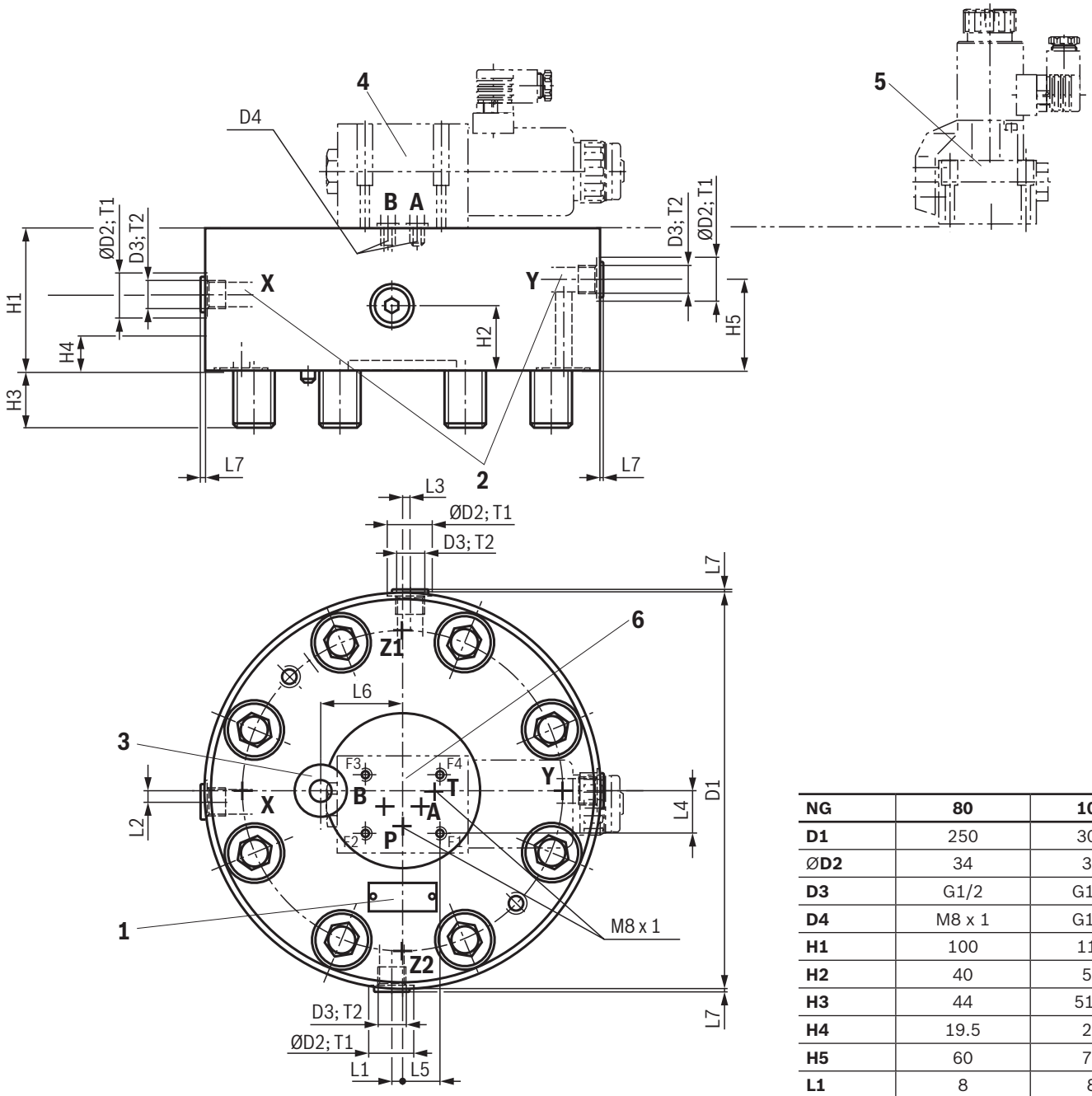

NG	80	100
D1	250	300
ØD2	34	34
D3	G1/2	G1/2
D4	M8 x 1	G1/8
H1	100	110
H2	40	50
H3	44	51.5
H4	19.5	27
H5	60	70
L1	8	8
L2	6.5	5
L3	6.5	6
L4	31	31
L5	27	27
L6	55	62
L7	3	3
T1	14	14
T2	4	3

1 Name plate
2 Port X and Y optionally as threaded ports
3 Shuttle valve
4 Directional spool valve type 4WE 10 D... (pilot control valve), separate order, see page 15
5 Directional seat valve type M-3SEW 10 ... (pilot control valve), separate order, see page 15
6 Porting pattern according to ISO 4401-05-04-0-05 (mounting thread for version "/12" see data sheet 08936)

☞ **Notice:**
The dimensions are nominal dimensions which are subject to tolerances.

Control cover "HWMA." and **"HWMB."** for set-up of a directional valve: NG16 ... 40

01	02	03		04		05	06	07	08	09	10	11	12	13	14	15	16	17	18	19
LFA			**–**	**7X**	**/**													**1)**	**1)**	**1)**

02	03	12	13	15
Size	**Type**	**P**	**T**	**F**
16	**HWMA1**	P** ◿	T** ◿	F** ◿
25	**HWMA2**	P** ◿	T** ◿	F** ◿
32	**HWMB1**	P** ◿	T** ◿	F** ◿
40	**HWMB2**	P** ◿	T** ◿	F** ◿

◿ Orifice possible, if required, specifications have to be made

1) See "Ordering code for control cover type LFA..." page 14.

For ordering code of orifices, see page 95.

LFA . HWMA... (NG16 ... 40)

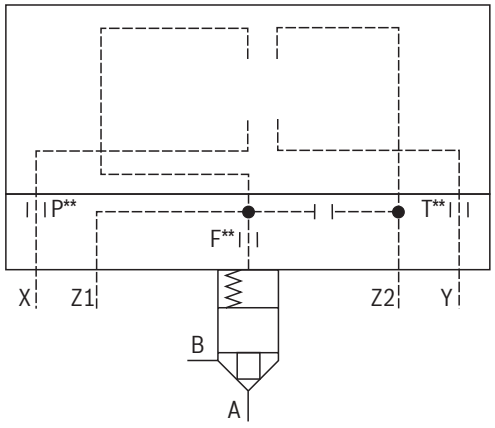

LFA . HWMB... (NG16 ... 40)

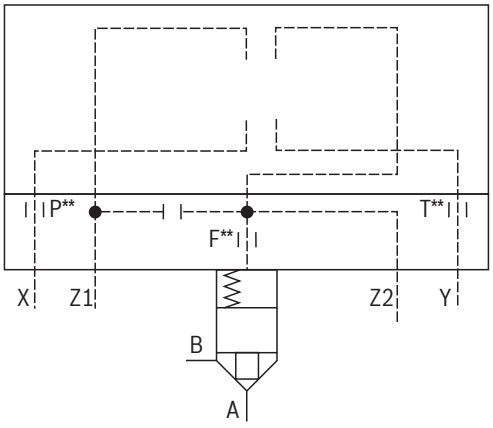

Control cover "HWMA." and **"HWMB."** for set-up of a directional valve: NG16 ... 40
(dimensions in mm)

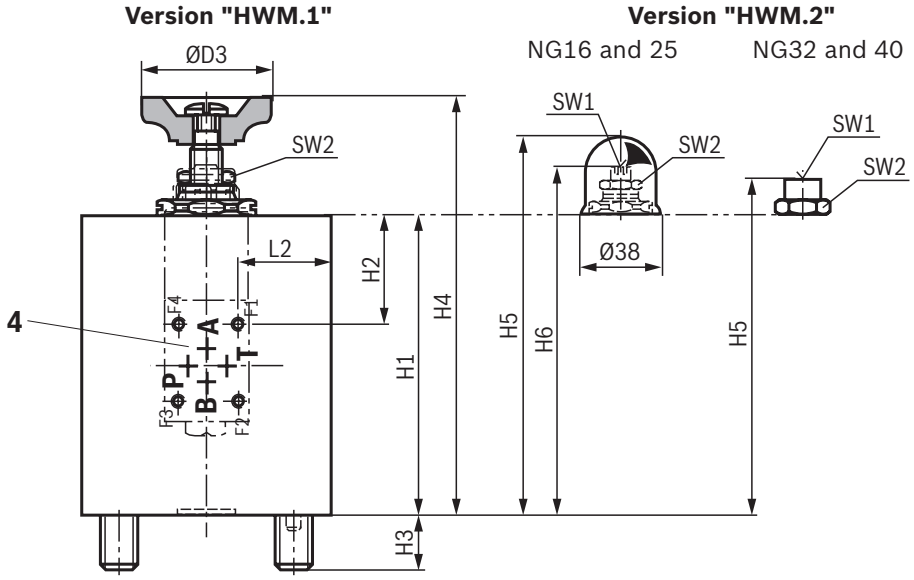

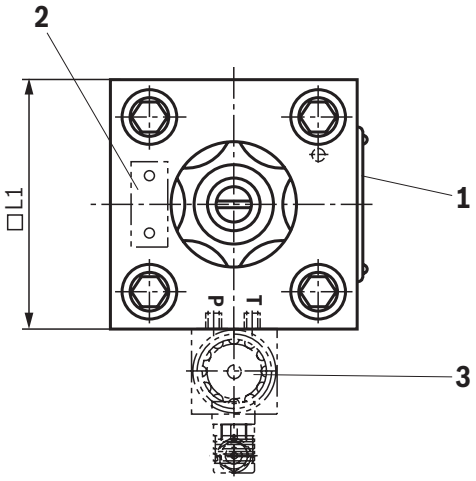

1 Name plate at NG16, 25, 32

2 Name plate at NG40

3 Directional spool valve type 4WE 6 D... (pilot control valve), separate order, see page 15

4 Porting pattern according to ISO 4401-03-02-0-05 (mounting thread for version "/12" see data sheet 08936)

NG	16	25	32	40
ØD3	52	80	80	100
H1	90	90	100	95
H2	21.5	21.5	31.5	19.5
H3	15	24	28	32
H4 max	145	145	145	160
H5 max	131	130	125	146
H6 max	100	95	–	–
□ L1	65	85	100	125
L2	17	27	34.5	57
SW1 [1)]	6	6	10	17
SW2	21	22	27	46

[1)] Internal hexagon

Mounting screws included within the scope of delivery (see also page 95).

☞ **Notice:**
The dimensions are nominal dimensions which are subject to tolerances.

Control cover "HWMA." and **"HWMB."** for set-up of a directional valve: NG50 and 63

01	02	03		04		05	06	07	08	09	10	11	12	13	14	15	16	17	18	19
LFA			**–**	**7X**	**/**													**1)**	**1)**	**1)**

02	03	12	13	15
Size	**Type**	**P**	**T**	**F**
50	**HWMA1** **HWMA2**	P** ◿	T** ◿	F** ◿
63	**HWMB1** **HWMB2**	P** ◿	T** ◿	F** ◿

◿ Orifice possible, if required, specifications have to be made

1) See "Ordering code for control cover type LFA..." page 14.

For ordering code of orifices, see page 95.

LFA . HWMA... (NG50 and 63)

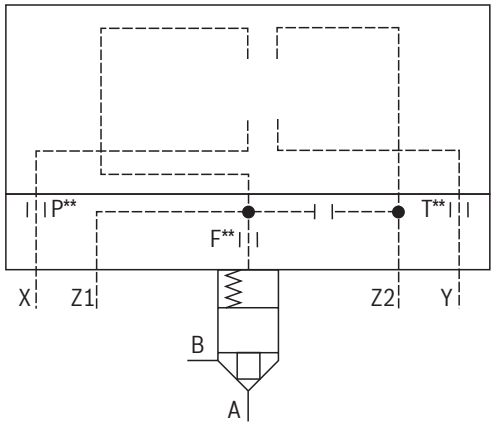

LFA . HWMB... (NG50 and 63)

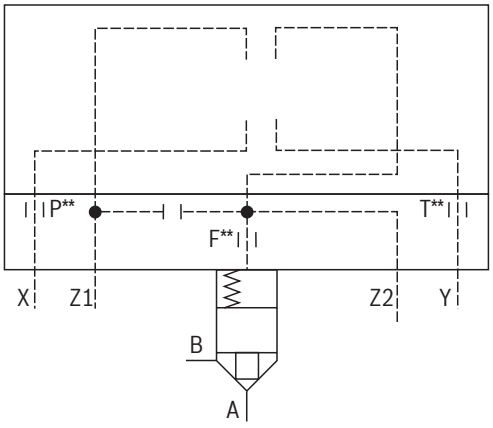

Control cover "HWMA." and **"HWMB."** for set-up of a directional valve: NG50 and 63 (dimensions in mm)

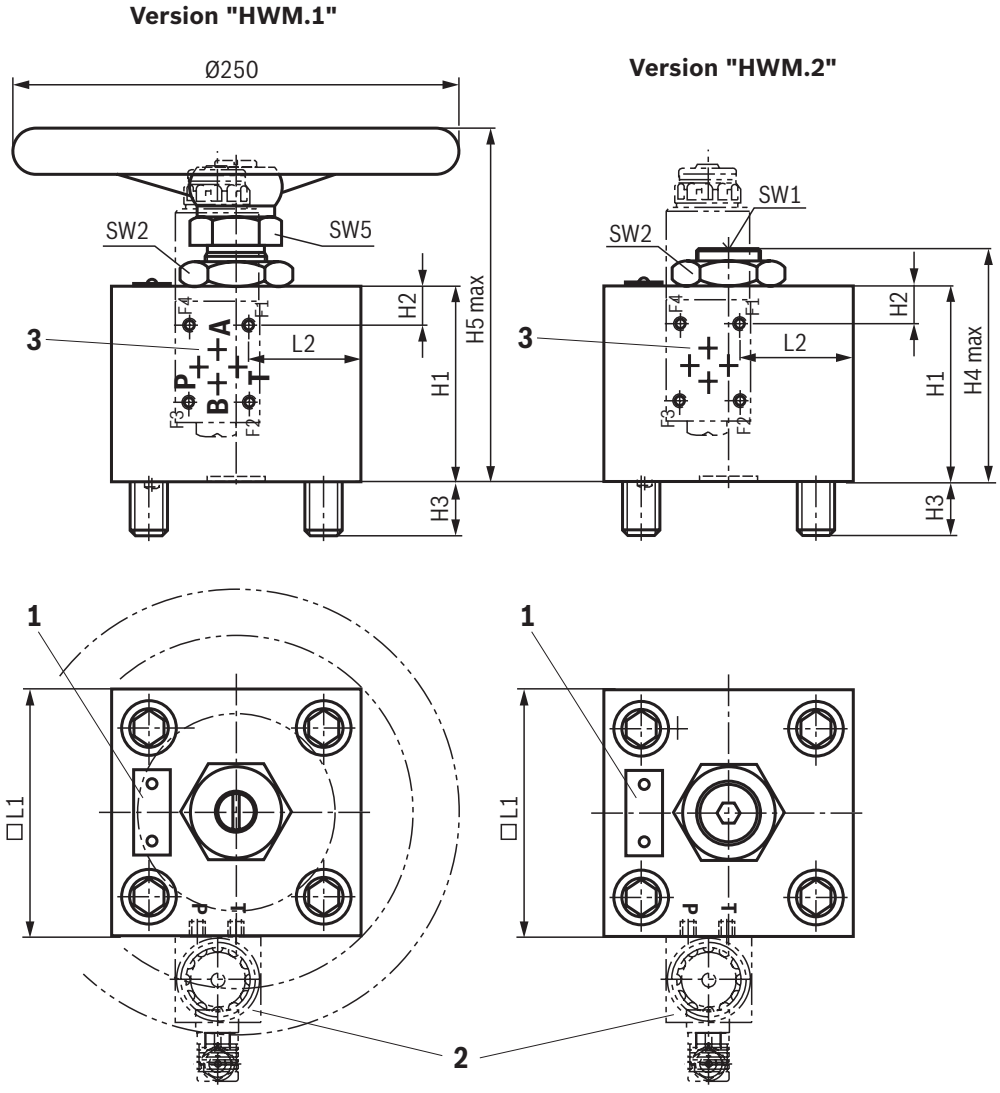

1 Name plate

2 Directional spool valve (pilot control valve)
- ▶ NG50: Type 4WE 6 D...
- ▶ NG63: Type 4WE 10 D...,

separate order, see page 15

3 Porting pattern according to ISO 4401-03-02-0-05 (NG50) or ISO 4401-05-04-0-05 (NG63)
(mounting thread for version "/12" see data sheet 08936)

NG	50	63
H1	110	125
H2	34.5	18
H3	34	50
H4 max	156	175
H5 max	230	250
□ L1	140	180
L2	68	55
SW1 [1)]	17	22
SW2	55	65
SW5	46	55

Mounting screws included within the scope of delivery (see also page 95).

[1)] Internal hexagon

☞ **Notice:**
The dimensions are nominal dimensions which are subject to tolerances.

Intermediate cover "D19" for installation kit with increased spring installation space and spool sealing (upon request)

01	02	03		04		05	06	07	08	09	10	11	12	13	14	15
LFA		**D19**	**–**	**7X**	**/**									**1)**	**1)**	**1)**

02

Size					
16	**25**	**32**	**40**	**50**	**63**

1) See "Ordering code for control cover type LFA..." page 14.

☞ **Notice:**
Larger spring installation space (see type LC.../-004 and LC.../-146 page 97)

LFA . D19...

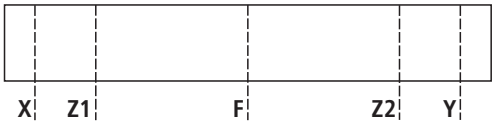

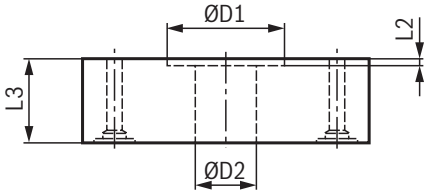

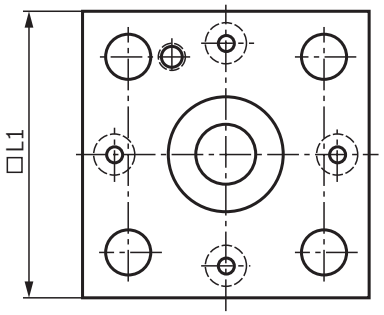

NG	16	25	32	40	50	63
ØD1	24.9	34.5	44.6	71	86	114
ØD2	8.5	18.2	23.3	32	42	50
□ L1	65	85	100	125	140	180
L2	2	2	2.7	2.7	4.3	4.3
L3	25	25	30	30	40	60

Mounting screws: Intermediate cover with control cover (separate order)

NG	Control cover type LFA	Hexagon socket head cap screws ISO 4762 - 10.9-flZn/nc/480h/C			
		Quantity	Dimension	Material number	Tightening torque M_A in Nm ±10%
16	WE., GW.	4	M8 x 70	R913014548	30
	WEM., GWMA		M8 x 95	R913015806	
	1)		M8 x 65	R913014761	
25	1)	4	M12 x 75	R913014791	100
32	H1, H2	4	M16 x 110	R913015642	240
	H3, H4		M16 x 100	R913015640	
	1)		M16 x 90	R913014712	
40	H1, H2	4	M20 x 140	R913015675	480
	1)		M20 x 100	R913015670	
50	H2, H4	4	M20 x 160	R913015677	480
	1)		M20 x 120	R913015672	
63	H2, H4	4	M30 x 210	R913015754	1600
	1)		M30 x 160	R913015749	

1) More available series control covers

Mounting screws control cover LFA (included in the scope of delivery)

Hexagon socket head cap screws ISO 4762 - 10.9-flZn/nc/480h/C [1)]

Size	Quantity	Tightening torque M_A in Nm ±10%
16	4	30
25	4	100
32	4	240
40	4	480
50	4	480
63	4	1600
80	8	800
100	8	1600
125	8	3100
160	12	5000

☞ **Notice:**
- The tightening torques stated are guidelines when using screws with the specified friction coefficients and when using a manual torque wrench (tolerance ± 10%).
- The specified tightening torques were calculated with total friction coefficient μ = 0.09 ... 0.14; adjust in case of modified surfaces.
- Supplied mounting screws are only suitable for direct assembly on a block. If an intermediate cover is used, mounting screws have to be designed accordingly longer (see page 94).

1) Hexagon socket head cap screws UNC, see data sheet 089366

Characteristic curves for selecting orifices

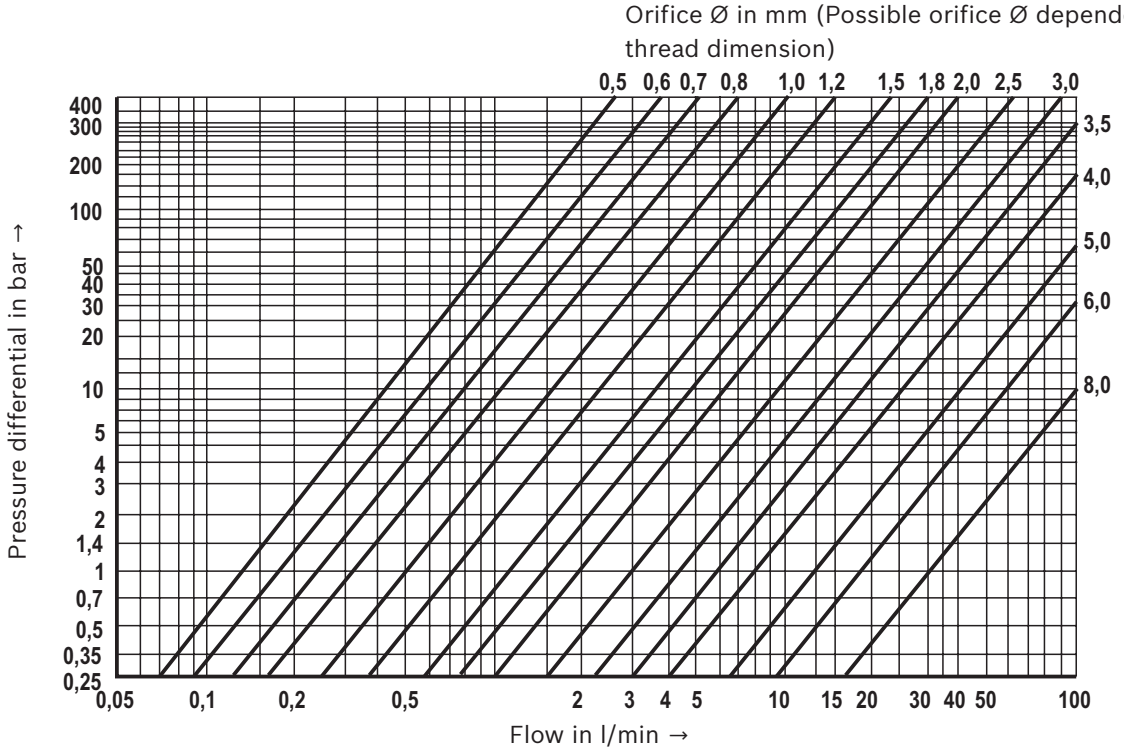

Orifices and **plug screws**

Orifices

Orifice Ø in mm	Order numbers	Material numbers						
		M6 conical	M8x1 conical	G 1/8 conical	G 1/4 conical	G 3/8 conical	G 1/2 conical	G 1 conical
–	**00**	–	–	–	–	–	–	–
0.5	**05**	R913040356	R913017600	R913030187	R913040456	–	–	–
0.6	**06**	R913040358	R913017605	R913017606	R913020197	–	–	–
0.7	**07**	R913040360	R913017609	R913046092	–	–	–	–
0.8	**08**	R913029447	R913017614	R913017616	R913017615	R913040481	R913040499	–
1.0	**10**	R913019186	R913017621	R913024679	R913017622	R913040484	R913040500	–
1.2	**12**	R913040362	R913017627	R913017629	R913017628	R913040486	R913040501	–
1.5	**15**	R913028337	R913017637	R913017639	R913017638	R913040488	R913028317	–
1.8	**18**	R913030186	R913017644	R913017646	R913017645	R913040489	R913045913	–
2.0	**20**	R913029870	R913017651	R913040450	R913017652	R913028417	R913028336	–
2.5	**25**	R913032543	R913035796	R913017656	R913019582	R913040493	R913040502	–
3.0	**30**	R913040368	R913017661	R913017663	R913017662	R913018266	R913040503	R913040467
3.5	**35**	–	R913017667	R913040452	R913040463	R913028318	R913019856	R913040469
4.0	**40**	–	R913017670	R913027078	R913040464	R913018265	R913029168	R913040470
4.5	**45**	–	R913046571	R913017671	R913040465	–	R913040506	–
5.0	**50**	–	–	R913017673	R913040468	R913023871	R913019857	R913040471
5.5	**55**	–	–	R913027077	–	R913040495	R913053659	–
6.0	**60**	–	–	–	–	R913023870	R913028418	R913020247
7.0	**70**	–	–	–	R913040461	R913017675	R913040509	–
7.5	**75**	–	–	–	–	R913023430	–	R913018328
8.0	**80**	–	–	–	–	R913046570	R913040510	R913020246
closed	**99**	R913019128	R913019129	R913019137	R913019136	R913019138	–	R913019140

Plug screws

Thread	Tightening torque M_A in Nm ±10%
G1/8	12
G1/4	30
G3/8	55
G1/2	80
G3/4	135
G1	225
G1 1/4	360

Additional functions with special numbers: Cartridge valve (upon request)

Symbol	**Type** (examples)	**Size**	**Description/special characteristic**
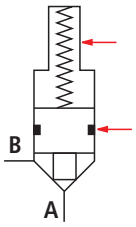	LC . A..D7X/-**004** LC . A..E7X/-**004** LC . B..E7X/-**004**	16 ... 50 16 ... 50 16 ... 63	▶ With spool sealing (leakage-free) ▶ Larger spring installation space ▶ Special cover or intermediate cover "D19" required ▶ NG16 ... 40: only with cracking pressure approx. 4 bar ▶ NG50 and 63: cracking pressure approx. 2 bar or higher; alternatively "without spring"
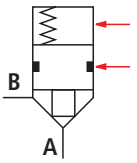	LC . A..D6X/-**104** LC . A..E6X/-**104** LC . B..E6X/-**104** LC . A..D7X/-**104** LC . A..E7X/-**104** LC . A..E2X/-**104**	80, 100 80, 100 80, 100 40 ... 63 40 ... 63 125, 160	▶ With spool sealing (leakage-free), ▶ as SO-004, however, no special cover required
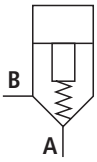	LC . A05D6X/-**054** LC . A20D6X/-**054** LC . A05E6X/-**054** LC . A..E6X/-**054** LC ./100 A20E6X/-**054** LC . B05E6X/-**054** LC . B20E6X/-**054** LC . A20D7X/-**054** LC . A40D7X/-**054** LC . A20E7X/-**054** LC . A..E7X/-**054**	16 25 ... 32 16 25 ... 80 32, 100 12 25 50 63 50 63	▶ Pulling logic with open zero position ▶ Special cover (e.g. "D54") required
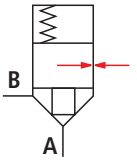	LC ...7X/-**135**	16 ... 40	▶ Larger spool clearance
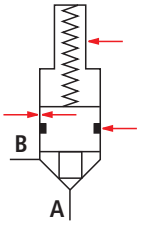	LC ...7X/-**146**	16 ... 40	▶ Larger spool clearance ▶ With spool sealing (leakage-free) ▶ Larger spring installation space ▶ Special cover or intermediate cover "D19" required
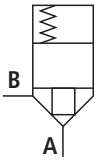	LC . A..D7X/-**R10** LC . A20D7X/-**R10** LC 1. A40E7X/-**R10** LC . A..E7X/-**R10** LC . A10E7X/-**R10** LC . A05E7X/-**R10** LC . B..D7X/-**R10** LC . B10D7X/-**R10** LC . B40E7X/-**R10** LC . B..E7X/-**R10**	16 25 16, 32 25, 63 40 50 25 32 25, 40 50, 63	▶ As standard, however, outer bushing diameter D1 and D4 **1 mm larger** (repair kit).
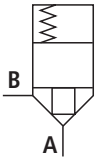	LC . A..D7X/-**R20** LC . A20D7X/-**R20** LC 1. A40E7X/-**R20** LC . A..E7X/-**R20** LC . A10E7X/-**R20** LC . A05E7X/-**R20** LC . B..D7X/-**R20** LC . B10D7X/-**R20** LC . B40E7X/-**R20** LC . B..E7X/-**R20**	16 25 16, 32 25, 63 40 50 25 32 25, 40 50, 63	▶ As standard, however, outer bushing diameter D1 and D4 **2 mm larger** (repair kit).

Additional functions with special numbers: Cartridge valve (upon request)

Symbol	**Type** (examples)	**Size**	**Description/special characteristic**
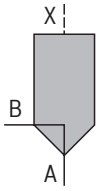	LC . XAB00E-7X/	16 ... 63	▶ Blind element without spool ▶ Channel A - B connected ▶ For use with available LFA cover, or in connection with a cover "LFA . D-7X/FX99"
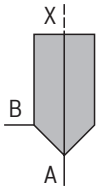	LC . XAF00E-7X/	16 ... 63	▶ Blind element without spool ▶ Channel A - F connected ▶ Channel B closed ▶ For use with available LFA cover, or in connection with a cover "LFA . D-7X/FX99"
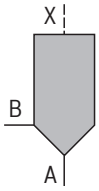	LC . X00E-7X/	16 ... 63	▶ Blind element without spool ▶ All channels blocked ▶ For use with available LFA cover, or in connection with a cover "LFA . D-7X/FX99"

Additional functions with special numbers: Control cover (upon request)

Symbol	Type	Size	Description/special characteristic
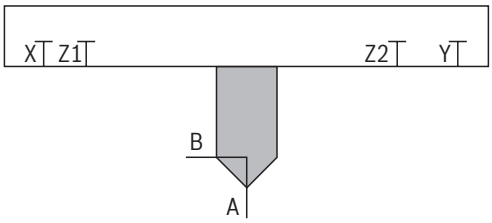	LFA . **D9**-7X/...	16 ... 63	▶ Cap, blind cover
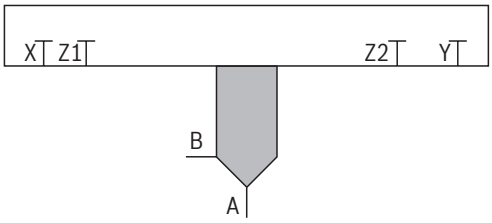	LFA . **D10**-7X/...	16 ... 63	▶ Cap, blind cover
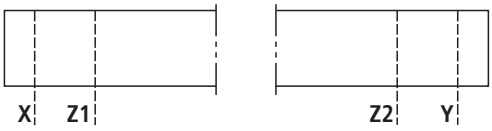	LFA . **D49**-7X/...	16 ... 40	▶ Spacer cover ▶ Suitable for producing a measuring plate
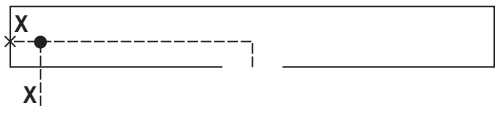	LFA . **D54**-6X/F LFA . **D54**-7X/F	16 ... 50 50	▶ Cover for logic zero position open (pulling logic)
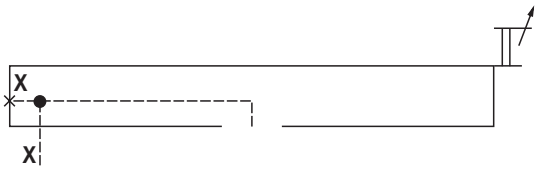	LFA...**H**.../FDR...	40 ... 80	▶ Stroke limitation cover for pressure logics
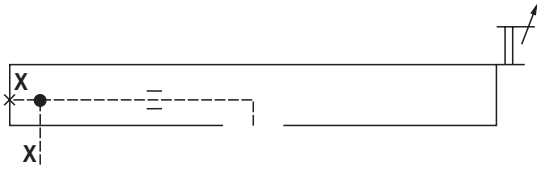	LFA . **H2-14**-7X/F	16	▶ Cover for use with spool sealing (type LC.../-004, LC.../-146) ▶ Intermediate cover "D19" required
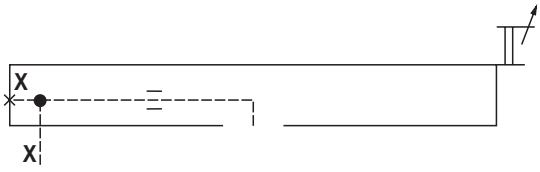	LFA . **H2-18**-7X/F	16 ... 63	▶ Stroke limitation with sealing
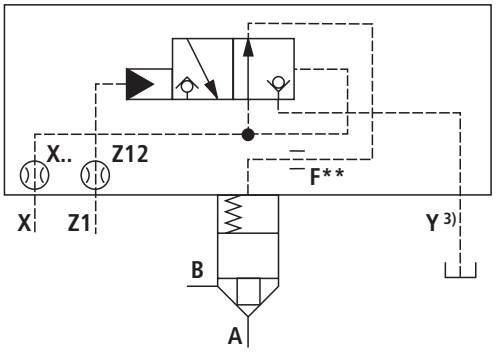	LFA . **R3**-7X/... LFA . **RF3**-7X/...	25 ... 63	▶ Area ratio: $\frac{A_{Z1}}{A_X} = \frac{6}{1}$

Additional functions with special numbers: Control cover (upon request)

Symbol	Type	Size	Description/special characteristic
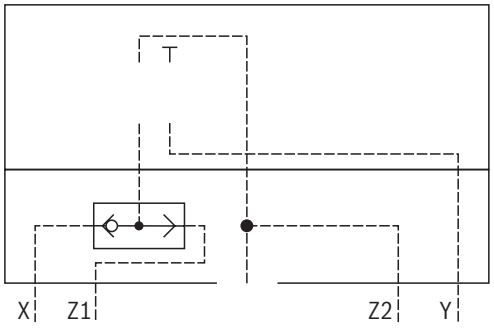	LFA . **GWA11**-7X/...	16 ... 63	▶ Spring chamber additionally on "Z2"
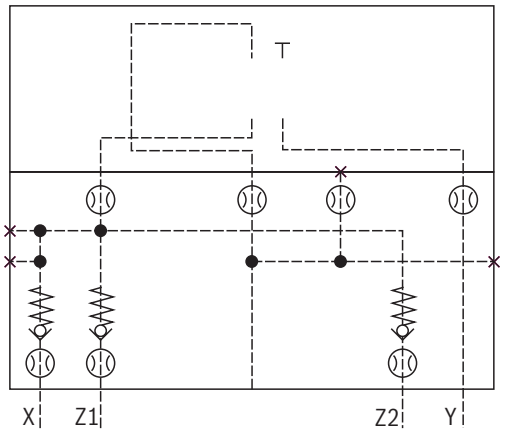	LFA . **GWA21**-7X/... LFA . **GWA21**-6X/...	32 ... 100	▶ 3 check valves
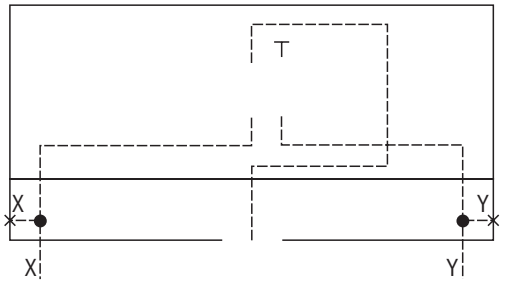	LFA . **WEA16**-7X/...	25, 30	▶ Additional external ports X and Y (G1/4)
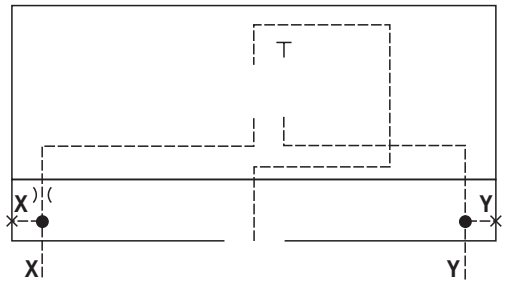	LFA . **WEA54**-7X/... LFA . **WEA54**-6X/... LFA . **WEMA54**-6X/...	32, 50, 63 25 ... 50 25	▶ Cover for logic zero position open ▶ NG25: identical version with type WEA and WEMA
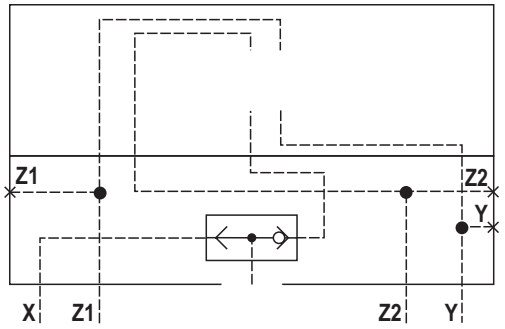	LFA . **KWA3**-7X/...	32 ... 63	

Additional functions with special numbers: Control cover (upon request)

Symbol	Type	Size	Description/special characteristic
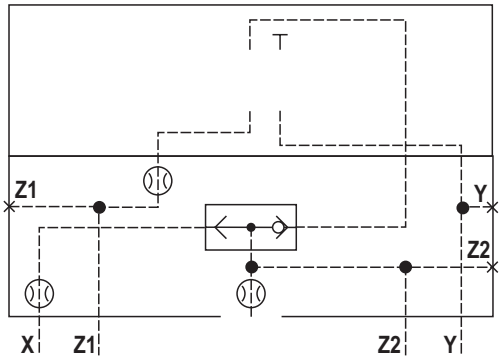	LFA . **KWA7**-7X//...	40 ... 63	▶ As "KWA", spring chamber additionally on "Z2"

Further information

▶ 2-way cartridge valve pressure functions	Data sheet 21050
▶ 2-way cartridge valves with spool position monitoring	Data sheet 21015
▶ 2-way cartridge valve, actively controllable, type LC2A	Data sheet 21040
▶ Directional spool valves type WE 6	Data sheet 23178
▶ Directional spool valve type WE 10	Data sheet 23340
▶ Directional spool valve type WEH	Data sheet 24751
▶ Directional seat valve type SEW 6	Data sheet 22058
▶ Directional seat valve type SEW 10	Data sheet 22075
▶ Directional seat valve type SED 6	Data sheet 22049
▶ Directional seat valve type SED 10	Data sheet 22045
▶ Cover plates type HSA	Data sheet 48042
▶ Sandwich plates type HSZ	Data sheet 48050
▶ Hydraulic fluids on mineral oil basis	Data sheet 90220
▶ Reliability characteristics according to EN ISO 13849	Data sheet 08012
▶ Hexagon socket head cap screw, metric/UNC	Data sheet 09836
▶ Hydraulic valves for industrial applications	Data sheet 07600-B
▶ Selection of the filters	www.boschrexroth.com/filter

Notes

Bosch Rexroth AG
Hydraulics
Zum Eisengießer 1
97816 Lohr am Main, Germany
Phone +49 (0) 93 52 / 18-0
documentation@boschrexroth.de
www.boschrexroth.de

Evolution Motion Solutions
13835 Senlac Dr, Farmers Branch, TX 75234
800-569-9801
info@**evolution**motion.com
www.**evolution**motion.com

© This document, as well as the data, specifications and other information set forth in it, are the exclusive property of Bosch Rexroth AG. It may not be reproduced or given to third parties without its consent.
The data specified above only serve to describe the product. No statements concerning a certain condition or suitability for a certain application can be derived from our information. The information given does not release the user from the obligation of own judgment and verification. It must be remembered that our products are subject to a natural process of wear and aging.

Notes

Bosch Rexroth AG
Hydraulics
Zum Eisengießer 1
97816 Lohr am Main, Germany
Phone +49 (0) 93 52/18-0
documentation@boschrexroth.de
www.boschrexroth.de

Evolution Motion Solutions
13835 Senlac Dr, Farmers Branch, TX 75234
800-569-9801
info@**evolution**motion.com
www.**evolution**motion.com

© This document, as well as the data, specifications and other information set forth in it, are the exclusive property of Bosch Rexroth AG. It may not be reproduced or given to third parties without its consent.
The data specified above only serve to describe the product. No statements concerning a certain condition or suitability for a certain application can be derived from our information. The information given does not release the user from the obligation of own judgment and verification. It must be remembered that our products are subject to a natural process of wear and aging.

Notes

Bosch Rexroth AG
Hydraulics
Zum Eisengießer 1
97816 Lohr am Main, Germany
Phone +49 (0) 93 52 / 18-0
documentation@boschrexroth.de
www.boschrexroth.de

Evolution Motion Solutions
13835 Senlac Dr, Farmers Branch, TX 75234
800-569-9801
info@**evolution**motion.com
www.**evolution**motion.com

© This document, as well as the data, specifications and other information set forth in it, are the exclusive property of Bosch Rexroth AG. It may not be reproduced or given to third parties without its consent.
The data specified above only serve to describe the product. No statements concerning a certain condition or suitability for a certain application can be derived from our information. The information given does not release the user from the obligation of own judgment and verification. It must be remembered that our products are subject to a natural process of wear and aging.