2-way cartridge valves, pressure and directional functions

Type LC (cartridge valves)
Type LFA (control cover)

RE 21030
Edition: 2017-07



H3031+3032

- High-pressure series
- Size 16 ... 100
- Component series 6X; 7X
- Maximum operating pressure 450 bar
- Maximum flow 13,000 l/min

Features

- Cartridge valves for pressure function
- Cartridge valves for directional function
- Control cover for pressure function
- Control cover for directional function

Contents

Features 1
Installation bore and connection dimensions 3

DIRECTIONAL FUNCTION
Function, sections, symbol 4
Technical data 5

Cartridge valve type LC
Ordering code 6
Symbols 6
Technical data 7, 8
Characteristic curves 9 ... 12

Control cover type LFA
Ordering code 13, 14
Symbols 15
Control cover "D" 16, 17
Control cover "H." 18 ... 23
Control cover "WEMA" and "WEMB" 24 ... 29
Control cover "GWMA20" 30 ... 37
Control cover "KWMA" 38 ... 43
Control cover "HWMA" and "HWMB" 44 ... 47
Intermediate cover "D19" 48

PRESSURE FUNCTION
Function, section, symbol 49
Technical data 50

Cartridge valve type LC
Ordering code 51
Symbols 51
Characteristic curves 52 ... 62

Control cover type LFA
General information on the ordering code 63, 64
Symbols 64
Control cover "DB" 65 ... 69
Control cover "DBEM" 70 ... 73
Control cover "DBS" 74 ... 79
Mounting screws 80
Characteristic curves for selecting orifices 81
Orifices and plug screws 82
Further information 83

Installation bore and connection dimensions according to ISO 7368
(dimensions in mm)

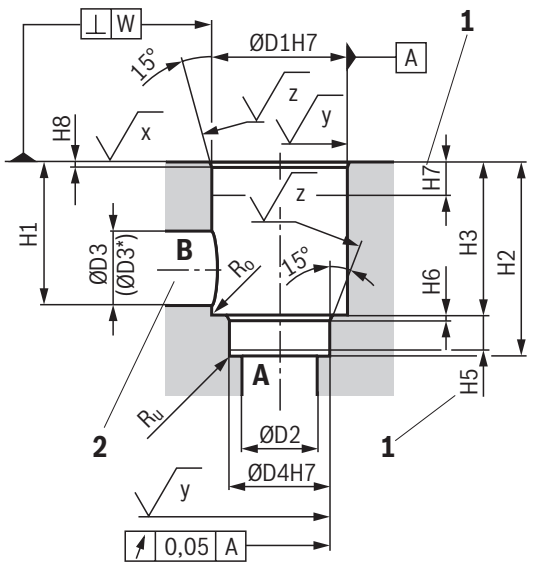

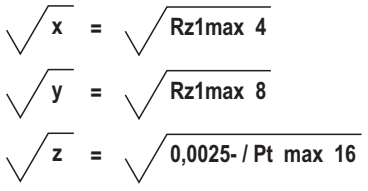

NG	16	25	32	40	50	63	80	100
ØD1H7	32	45	60	75	90	120	145	180
ØD2	16	25	32	40	50	63	80	100
ØD3	16	25	32	40	50	63	80	100
(ØD3*) [1]	25	32	40	50	63	80	100	125
ØD4H7	25	34	45	55	68	90	110	135
ØD5 [3]	M8	M12	M16	M20	M20	M30	M24	M30
ØD6	4	6	8	10	10	12	16	20
ØD7H13	4	6	6	6	8	8	10	10
H1	42.5	57	68.5	84.5	97.5	127	170.5	202.5
H2	56 +0.1	72 +0.1	85 +0.1	105 +0.1	122 +0.1	155 +0.1	205 +0.1	245 +0.1
H3	43 +0.2	58 +0.2	70 +0.2	87 +0.3	100 +0.3	130 +0.3	175 ±0.4	210 ±0.4
H4	20	25	35	45	45	65	50	63
H5	11	12	13	15	17	20	25	29
H6	2	2.5	2.5	3	3	4	5	5
H7	20	30	30	30	35	40	40	50
H8	2	2.5	2.5	3	4	4	5	5
H9	0.5	1	1.5	2.5	2.5	3	4.5	4.5
L1	65/80	85	102	125	140	180	250	300
L2	46	58	70	85	100	125	200	245
L3	23	29	35	42.5	50	62.5	–	–
L4	25	33	41	50	58	75	–	–
L5	10.5	16	17	23	30	38	–	–
W	0.05	0.05	0.1	0.1	0.1	0.1	0.1	0.1
R_o [2]	2	2	2	4	4	4	4	4
R_u [2]	1	1	1	1	1	1	1	1

[1] Due to the use of a bore with ØD3*, port B protrudes over the upper limit of the area intended in ISO 7368. This is, however, possible due to the sealing concept and reduces the pressure loss during flow through the valve. Thus, we recommend a bore with ØD3*.

[2] Maximum dimension

[3] Mounting thread for version "/12" see data sheet 08936

NG16 ... 63

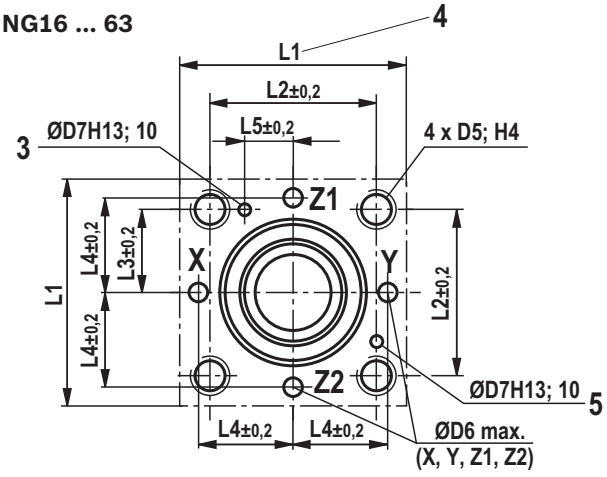

1 Depth of fit

2 Port B can be positioned around the central axis of port A. However, it must be observed that the mounting bores and the control bores are not damaged.

3 Bore for locating pin

4 80 mm only with control cover for directional valve set-up NG16 (axis X–Y bores)

5 Bore for locating pin in case of function as main pressure relief valve (reposition cover pin for assembly accordingly)

NG80 and 100

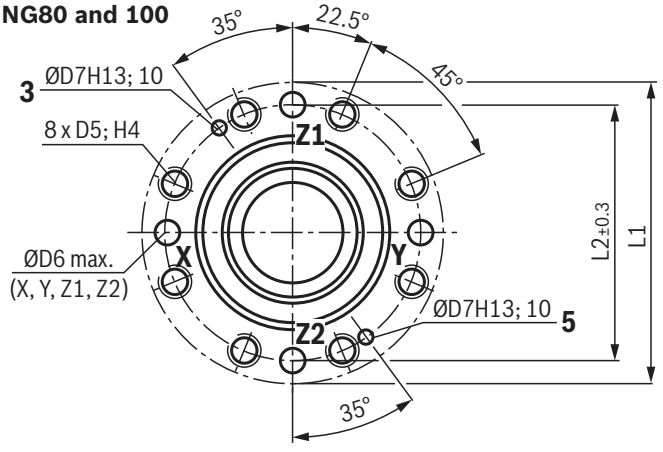

DIRECTIONAL FUNCTION

Function, sections, symbol

2-way cartridge valves are elements that have been designed for a compact block design. The power section with connections A and B is installed into the control block in a receiving hole standardized according to ISO 7368 and closed with a cover. In most cases, the cover is simultaneously the connection from the control side of the power section to the pilot control valves. By control with respective pilot control valves, the power section can be applied for pressure, directional and throttle functions or a combination of these functions. Particularly efficient solutions are realized by adjustment of the size to various flows of the individual ways of an actuator. The application of power sections of elements for multiple functions is very cost-effective.

2-way cartridge valves generally consist of control cover (1) and installation kit (2). The control cover contains the control bores and optionally a stroke limitation function, a hydraulically controlled directional seat valve or a shuttle valve according to the required overall function. Additionally, electrically operated directional spool or seat valves can be installed at a control cover. The installation kit consists of a bushing (3), ring (4) (only up to NG32), valve poppet (5), optionally with damping nose (6) or without damping nose (7) as well as closing spring (8). The function of 2-way cartridge valves is pressure-dependent. This way, three crucial pressurized areas $\boldsymbol{A}_1$, $\boldsymbol{A}_2$, $\boldsymbol{A}_3$ are realized for the function. The area at the valve seat $\boldsymbol{A}_1$ is considered as 100 %. Depending on the version, the annulus area $\boldsymbol{A}_2$ realized by grading is 7% or 50% of area $\boldsymbol{A}_1$. The area ratio $\boldsymbol{A}_1 : \boldsymbol{A}_2$ is respectively either 14.3 : 1 or 2 : 1. The area A_3 is identical to the sum of areas $\boldsymbol{A}_1 + \boldsymbol{A}_2$. Due to the different area ratios $\boldsymbol{A}_1 : \boldsymbol{A}_2$ and the resulting different annulus areas ($\boldsymbol{A}_2$), the area $\boldsymbol{A}_3$ is one time 107% and another time 150% of the area $\boldsymbol{A}_1$ at the seat, which is observed as 100%.

In general, the following applies:
The areas $\boldsymbol{A}_1$ and $\boldsymbol{A}_2$ are effective in opening direction. The area $\boldsymbol{A}_3$ and the spring are effective in closing direction. The direction of action of the resulting force from the opening and closing forces determines the spool position of the 2-way cartridge valve.
The 2-way cartridge valves can be passed from A to B or from B to A. In case of pressurization of area $\boldsymbol{A}_3$ by pilot oil discharge from channel B or external pilot oil supply, channel A is blocked in a leakage-free manner.

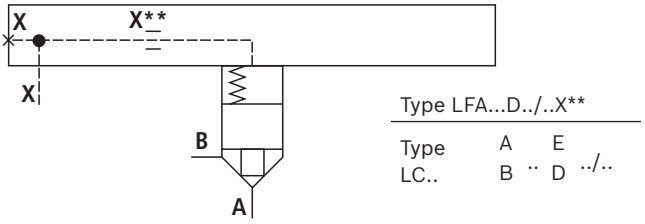

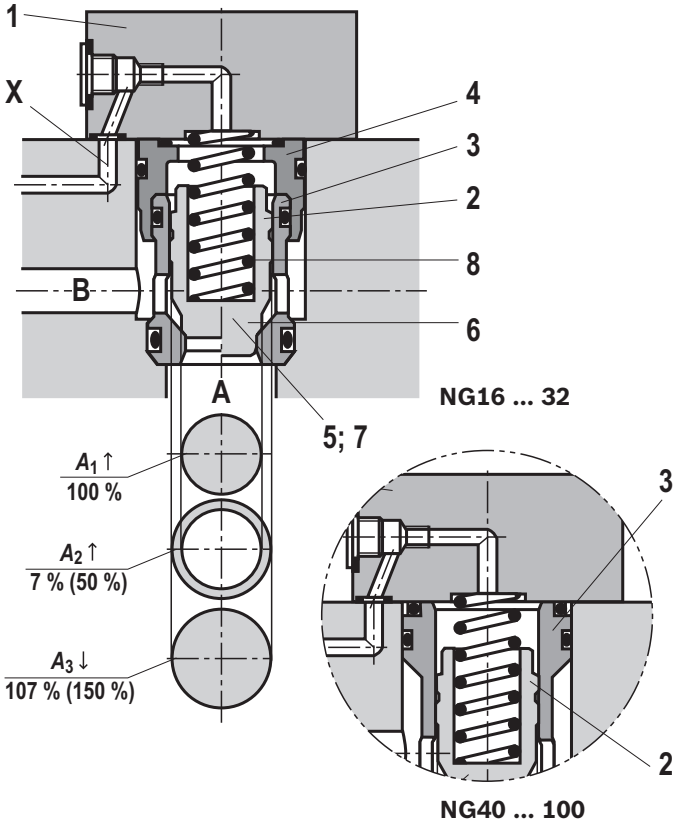

DIRECTIONAL FUNCTION

Technical data

(For applications outside these values, please consult us!)

general										
Size			16	25	32	40	50	63	80	100
Weight	▶ Type LC	kg	0.25	0.5	1.1	1.9	3.9	7.2	13.0	27.0
	▶ Type LFA	kg	1.2	2.3	4.0	7.4	10.5	21.0	27.0	42.0
Ambient temperature range		°C	–20 ... +80							
$MTTF_D$ values according to EN ISO 13849		Years	150 (for further details see data sheet 08012)							

hydraulic			
Maximum operating pressure	▶ Without directional valve	bar	450
	▶ Port A, B, X, Z1, Z2	bar	315; 350; 450 (dependent on the attached directional valve)
	▶ Port Y	bar	depending on the maximum tank pressure of the attached directional valve
Maximum flow		l/min	13000 (NG-dependent; see characteristic curves page 9 ... 12
Hydraulic fluid			see table below
Hydraulic fluid temperature range		°C	–20 ... +80
Viscosity range		mm^2/s	2.8 ... 500
Maximum admissible degree of contamination of the hydraulic fluid, cleanliness class according to ISO 4406 (c)			Class 20/18/15 [1)]

Hydraulic fluid		**Classification**	**Suitable sealing materials**	**Standards**	**Data sheet**
Mineral oils		HL, HLP	H-ECOPUR	DIN 51524	90220
Bio-degradable	▶ Insoluble in water	HETG	H-ECOPUR	ISO 15380	90221
		HEES	H-ECOPUR		
Flame-resistant	▶ Water-free	HFDU (glycol base)	H-ECOPUR	ISO 12922	90222
		HFDU (ester base)	H-ECOPUR		

☞ **Important information on hydraulic fluids:**

- For further information and data on the use of other hydraulic fluids, please refer to the data sheets above or contact us.
- There may be limitations regarding the technical valve data (temperature, pressure range, life cycle, maintenance intervals, etc.).
- **Bio-degradable and flame-resistant:** If this hydraulic fluid is used, small amounts of dissolved zinc may get into the hydraulic system.

1) The cleanliness classes specified for the components must be adhered to in hydraulic systems. Effective filtration prevents faults and simultaneously increases the life cycle of the components.
For the selection of the filters see www.boschrexroth.com/filter.

DIRECTIONAL FUNCTION

Ordering code: Cartridge valve (without control cover)

01	02	03	04	05	06		07	08
LC						**/**	**450**	**P**

01	Cartridge valve	**LC**

02	Size 16	**16**
	Size 25	**25**
	Size 32	**32**
	Size 40	**40**
	Size 50	**50**
	Size 63	**63**
	Size 80	**80**
	Size 100	**100**

Piston design (for area ratio see section on page 4)

03	$A_1 : A_2 = 2 : 1$ ($A_2 = 50$ %)	**A**
	$A_1 : A_2 = 14.3 : 1$ ($A_2 = 7$ %)	**B**

04	Cracking pressure 0 bar (without spring)	**00**
	Cracking pressure ca. 0.5 bar	**05**
	Cracking pressure ca. 1 bar	**10**
	Cracking pressure ca. 2 bar	**20**
	Cracking pressure ca. 3 bar (only NG125)	**30**
	Cracking pressure ca. 4 bar (not NG125)	**40**
	For the exact values see page 7.	

05	Valve poppet **without** damping nose	**E**
	Valve poppet **with** damping nose	**D**

06	Component series 70 ... 79 (70 ... 79: unchanged installation and connection dimensions) (NG16 ... 63)	**7X**
	Component series 60 ... 69 (60 ... 69: unchanged installation and connection dimensions) (NG80 and 100)	**6X**

07	High-pressure series	**450**

Seal material

08	H-ECOPUR	**P**
	Observe compatibility of seals with hydraulic fluid used. (Other seals upon request)	

Symbols

Version "E"		**Version "D"**	
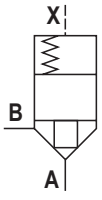	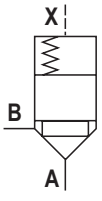	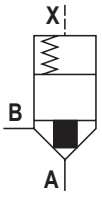	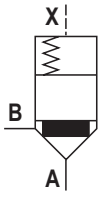
Area ratio $A_1 : A_2 = 2 : 1$ Version "...A.E..."	Area ratio $A_1 : A_2 = 14.3 : 1$ Version "...B.E..."	Area ratio $A_1 : A_2 = 2 : 1$ Version "...A.D..."	Area ratio $A_1 : A_2 = 14.3 : 1$ Version "...B.D..."

DIRECTIONAL FUNCTION

Technical data: Cartridge valve (without control cover)
(For applications outside these values, please consult us!)

Size of the annulus area

Area in cm^2	**Version**	**Size**							
		16	**25**	**32**	**40**	**50**	**63**	**80**	**100**
A_1	LC..A..	1.89	4.27	6.79	11.1	19.63	30.19	37.9	63.6
	LC..B..	2.66	5.73	9.51	15.55	26.42	41.28	52.8	89.1
A_2	LC..A..	0.95	1.89	3.39	5.52	8.64	13.99	18.84	31.4
	LC..B..	0.18	0.43	0.67	1.07	1.85	2.90	3.94	5.9
A_3	LC..A..	2.84	6.16	10.18	16.62	28.27	44.18	56.74	95
	LC..B..	2.84	6.16	10.18	16.62	28.27	44.18	56.74	95

Piston form (damping nose)

		Version	**Size**							
			16	**25**	**32**	**40**	**50**	**63**	**80**	**100**
Stroke	cm	LC..E..	0.9	1.17	1.4	1.7	2.1	2.3	2.4	3.0
		LC..D..	0.9	1.17	1.4	1.9	2.3	2.8	3.0	3.8
Pilot volume	cm^3	LC..E..	2.56	7.21	14.3	28.3	59.4	102	136	285
		LC..D..	2.56	7.21	14.3	31.6	65.0	124	170	361
Theoretical pilot flow [1]	l/min	LC..E..	15.4	43.3	86	170	356	612	816	1710
		LC..D..	15.4	43.3	86	190	390	744	1020	2166

[1] For realization of a switching time of 10 ms

☞ **Notice:**
Pistons with damping nose are mainly used in applications with stroke limitation and piston position monitoring. Due to the better flow values, we recommend the piston without damping nose by default.

DIRECTIONAL FUNCTION

Technical data: Cartridge valve (without control cover)
(For applications outside these values, please consult us!)

Cracking pressure in bar

		Size							
	Version	**16**	**25**	**32**	**40**	**50**	**63**	**80**	**100**
Direction of flow A to B	LC..A 00..	0.02	0.025	0.05	0.05	0.05	0.07	0.07	0.1
	LC..A 05..	0.35	0.35	0.36	0.35	0.37	0.31	0.44	0.43
	LC..A 10..	0.70	0.68	0.72	0.71	0.67	0.64	0.88	0.88
	LC..A 20..	2.03	2.18	2.12	2.02	2.01	2.0	1.75	1.75
	LC..A 30..	–	–	–	–	–	–	–	–
	LC..A 40..	3.50	3.90	3.80	4.0	4.11	3.8	3.13	3.04
	LC..B 00..	0.014	0.02	0.035	0.035	0.035	0.05	0.05	0.07
	LC..B 05..	0.25	0.26	0.26	0.25	0.28	0.23	0.31	0.31
	LC..B 10..	0.49	0.50	0.51	0.51	0.48	0.47	0.63	0.63
	LC..B 20..	1.44	1.62	1.52	1.44	1.5	1.5	1.26	1.25
	LC..B 30..	–	–	–	–	–	–	–	–
	LC..B 40..	2.48	2.90	2.70	2.86	3.05	2.8	2.25	2.17
Direction of flow B to A	LC..A 00..	0.04	0.05	0.1	0.1	0.1	0.14	0.14	0.2
	LC..A 05..	0.69	0.78	0.72	0.7	0.84	0.68	0.88	0.88
	LC..A 10..	1.38	1.53	1.42	1.43	1.47	1.37	1.77	1.78
	LC..A 20..	4.05	4.91	4.25	4.06	4.57	4.33	3.53	3.54
	LC..A 30..	–	–	–	–	–	–	–	–
	LC..A 40..	6.96	8.74	7.6	8.05	9.34	8.15	6.3	6.2
	LC..B 00..	0.24	0.25	0.5	0.5	0.5	0.8	0.7	1.0
	LC..B 05..	3.69	3.40	3.64	3.64	3.95	3.27	4.2	4.6
	LC..B 10..	7.43	6.69	7.24	7.37	6.88	6.62	8.4	9.4
	LC..B 20..	21.3	21.5	21.6	20.9	21.4	20.9	16.9	18.7
	LC..B 30..	–	–	–	–	–	–	–	–
	LC..B 40..	36.6	38.3	38.6	41.5	43.6	39.4	30.2	32.5

DIRECTIONAL FUNCTION

Characteristic curves: without damping nose "E", A → B
(simulated with HLP46, ϑ_{Oil} = 40 ±5 °C)

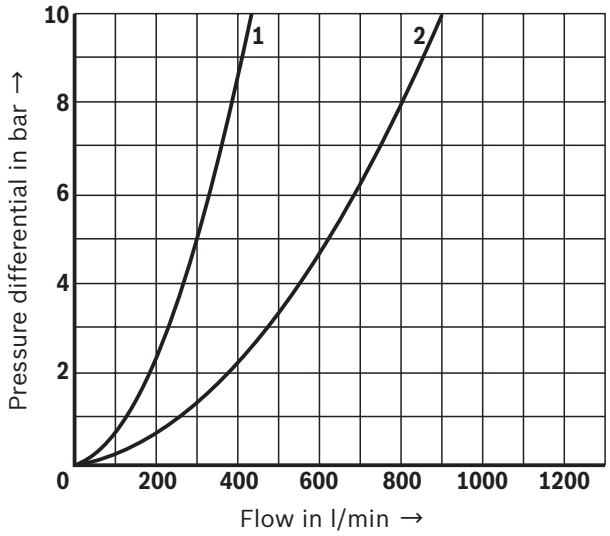

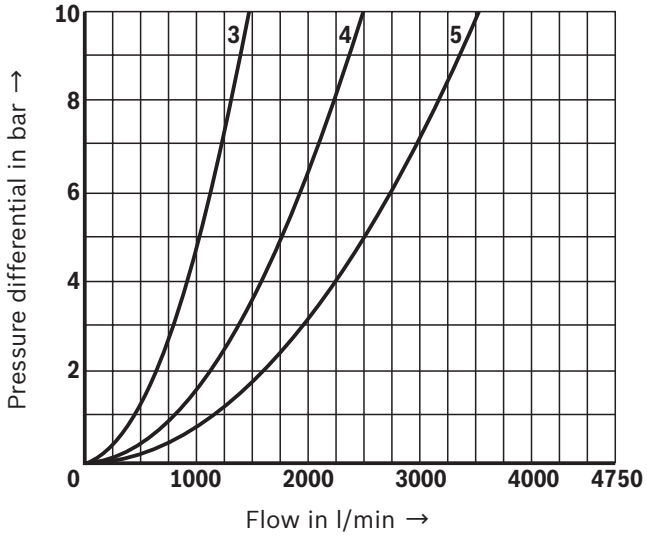

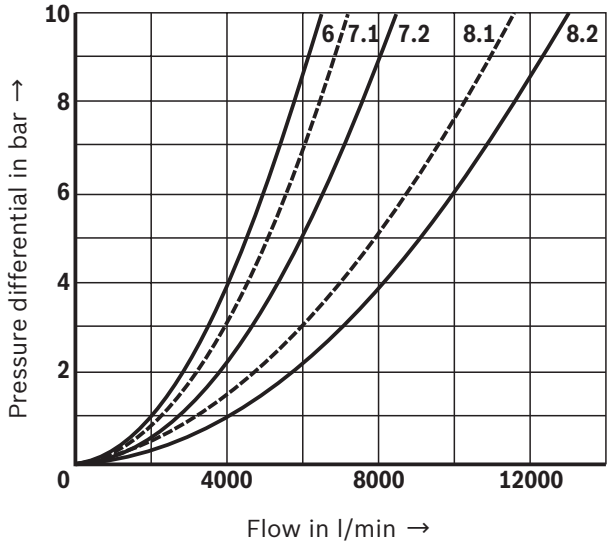

☞ **Notice:**
The specified characteristic curves were simulated with 100% piston stroke and an aligned socket (see sketch below). The simulation results were validated by measurement results. The basis was an installation geometry with ØD3* (see installation bore page 3) and a simulation model according to ISO 4411/2008-10-01.

Recommended socket alignment:

NG16 ... 32

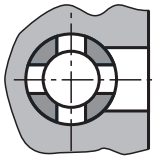

Bore on bore

NG40 ... 125

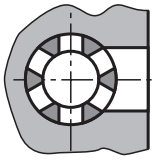

Bar on bore

1 Size 16
2 Size 25
3 Size 32
4 Size 40
5 Size 50
6 Size 63
7.1 Size 80, piston design "A"
7.2 Size 80, piston design "B"
8.1 Size 100, piston design "A"
8.2 Size 100, piston design "B"

DIRECTIONAL FUNCTION

Characteristic curves: without damping nose "E", B → A
(simulated with HLP46, ϑ_{Oil} = 40 ±5 °C)

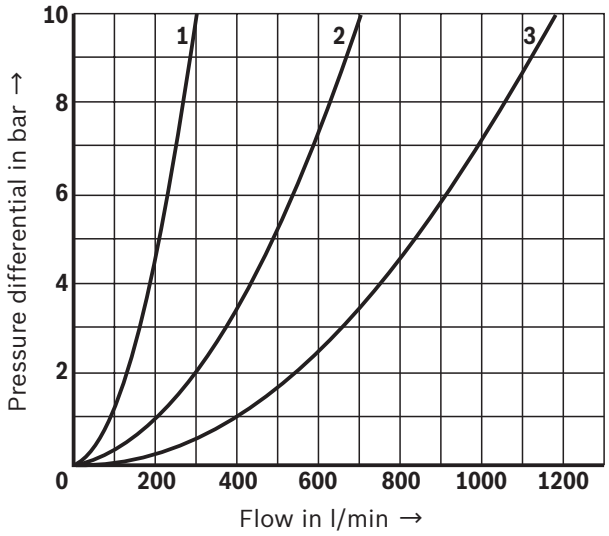

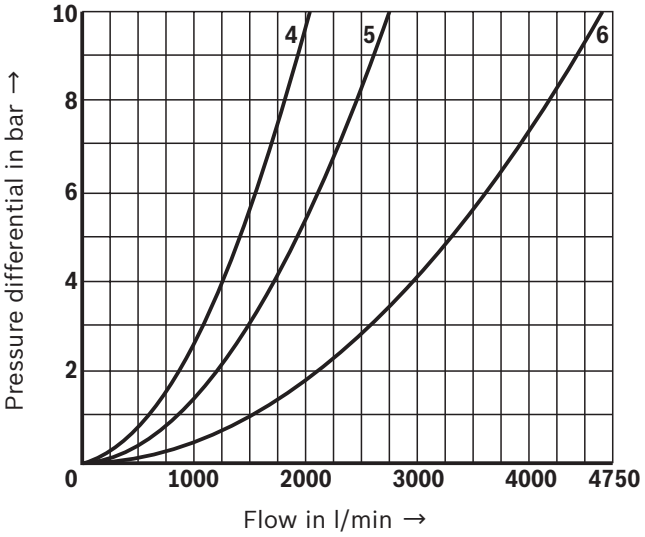

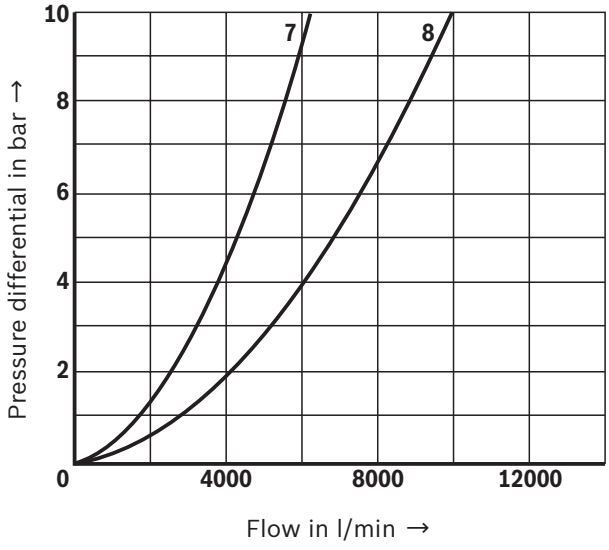

☞**Notice:**
The specified characteristic curves were simulated with 100% piston stroke and an aligned socket (see sketch on page 9). The simulation results were validated by measurement results. The basis was an installation geometry with ØD3* (see installation bore page 3) and a simulation model according to ISO 4411/2008-10-01.

1 Size 16
2 Size 25
3 Size 32
4 Size 40
5 Size 50
6 Size 63
7 Size 80
8 Size 100

DIRECTIONAL FUNCTION

Characteristic curves: with damping nose "D", A → B
(simulated with HLP46, ϑ_{Oil} = 40 ±5 °C)

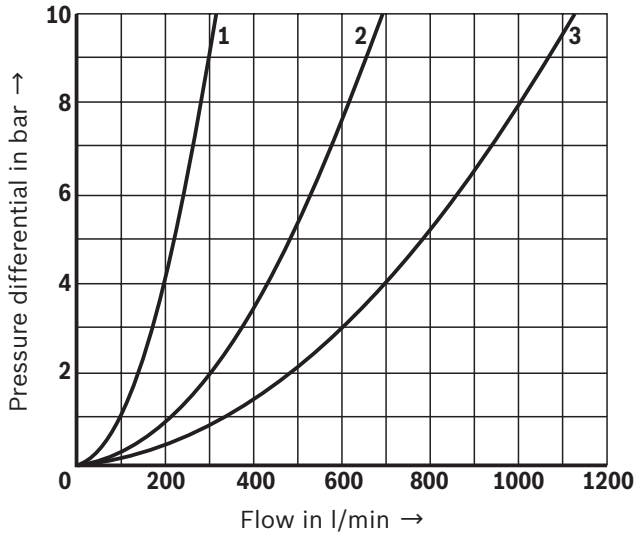

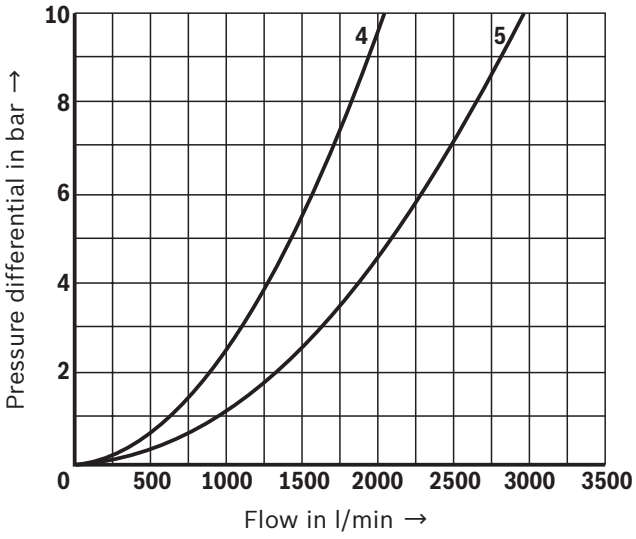

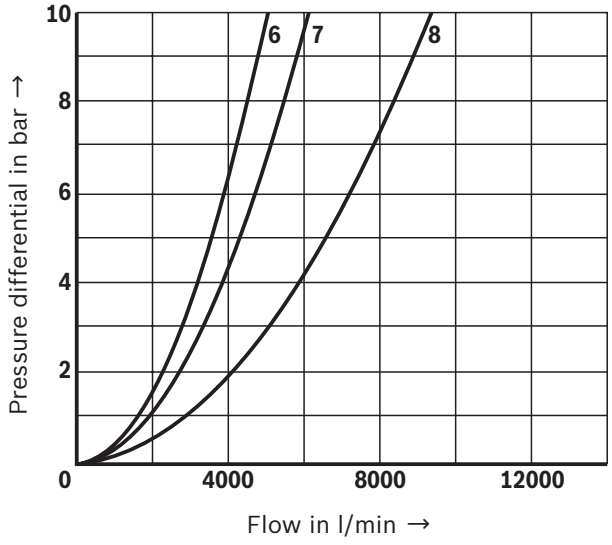

☞ **Notice:**
The specified characteristic curves were simulated with 100% piston stroke and an aligned socket (see sketch on page 9). The simulation results were validated by measurement results. The basis was an installation geometry with ØD3* (see installation bore page 3) and a simulation model according to ISO 4411/2008-10-01.

1 Size 16
2 Size 25
3 Size 32
4 Size 40
5 Size 50
6 Size 63
7 Size 80
8 Size 100

DIRECTIONAL FUNCTION

Characteristic curves: with damping nose "D", B → A
(simulated with HLP46, ϑ_{Oil} = 40 ±5 °C)

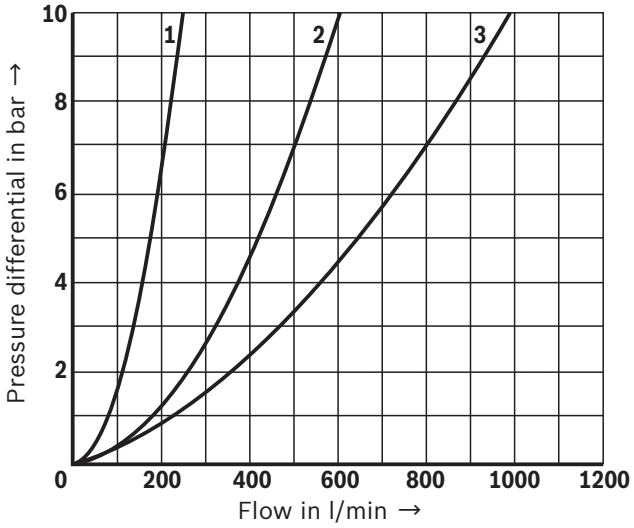

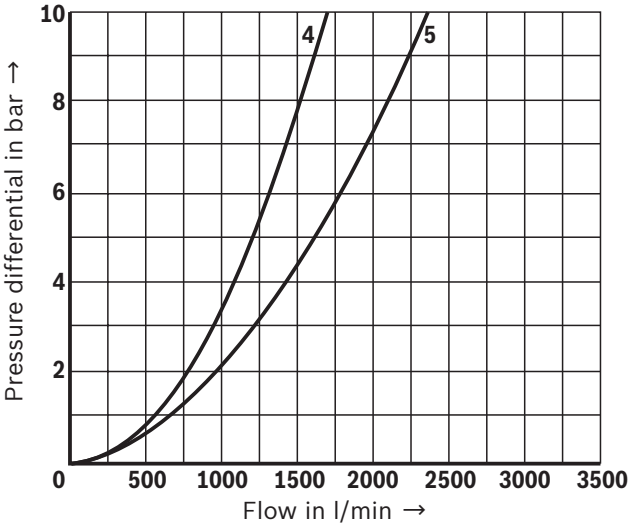

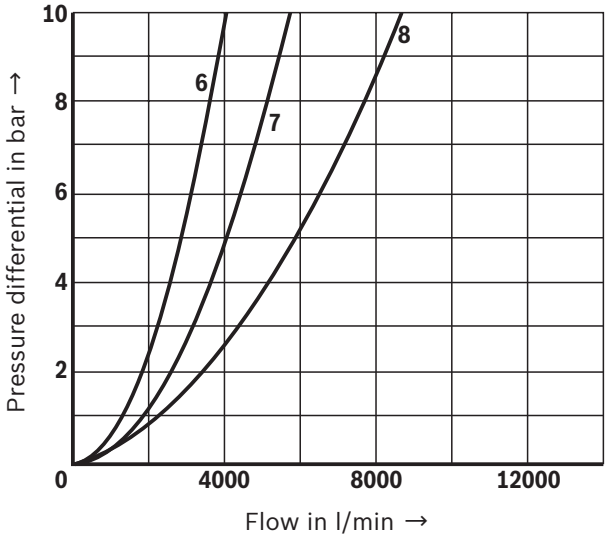

☞**Notice:**
The specified characteristic curves were simulated with 100% piston stroke and an aligned socket (see sketch on page 9). The simulation results were validated by measurement results. The basis was an installation geometry with ØD3* (see installation bore page 3) and a simulation model according to ISO 4411/2008-10-01.

1 Size 16
2 Size 25
3 Size 32
4 Size 40
5 Size 50
6 Size 63
7 Size 80
8 Size 100

DIRECTIONAL FUNCTION

Ordering code: Control cover type LFA...

01	02	03		04		05	06	07	08	09	10	11	12
LFA			**–**		**/**	**450**							**P**

01	Control cover	**LFA**

02	Size 16	**16**
	Size 25	**25**
	Size 32	**32**
	Size 40	**40**
	Size 50	**50**
	Size 63	**63**
	Size 80	**80**
	Size 100	**100**

Control cover types

03	Control cover with remote control port (NG16 ... 100)	**D**
	Control cover with stroke limitation (hand wheel) and remote control port (NG16 ... 63)	**H1**
	Control cover with stroke limitation (internal hexagon) and remote control port (NG16 ... 100)	**H2**
	Control cover for set-up of a directional valve; additional control port (NG16 ... 100)	**WEMA**
	Control cover for set-up of a directional valve; additional control port (preferably "WEMA") (NG16 ... 100)	**WEMB**
	Control cover with two check valves and for set-up of a directional valve; additional control port (NG16 ... 100) [1)]	**GWMA20**
	Control cover with shuttle valve and for set-up of a directional valve; additional control port (NG16 ... 100)	**KWMA**
	Control cover for set-up of a directional valve with stroke limitation (NG16 ... 63)	**HWMA**
	Control cover for set-up of a directional valve with stroke limitation (NG16 ... 63)	**HWMB**

04	Component series 70 ... 79 (70 ... 79: unchanged installation and connection dimensions) (NG16 ... 63)	**7X**
	Component series 60 ... 69 (60 ... 69: unchanged installation and connection dimensions) (NG80 and 100)	**6X**

05	High-pressure series	**450**

Orifices

06 ... 11	For more detailed information, please refer to the pages of the individual control cover variants and to page 81 (orifice characteristic curves).	

Seal material

12	H-ECOPUR	**P**
	Observe compatibility of seals with hydraulic fluid used. (Other seals upon request)	

DIRECTIONAL FUNCTION

Ordering code: Control cover type LFA...

Orifice symbol		Symbol in ordering code		
A**		**A****		This orifice is designed as screw-type orifice. If an orifice is to be installed, the respective code letter with the orifice Ø in 1/10mm has to be entered in the type designation. Example: **A12 =** orifice with Ø1.2 mm in channel A.
Ø1,2				This orifice is designed as bore. No specifications are made in the type designation. (Orifice Ø in mm)
Z12				This orifice is designed as screw-type orifice. This is a standard orifice. No specifications are made in the type designation. (Orifice Ø in 1/10mm)

Pilot control valve (separate order)

Control cover		Pilot control valve		
Size	**Version**	**Size**	**Description**	**Data sheet**
16 ... 50	WEM., GWMA20, KWM., HWM.	6	Directional seat valve, direct operated (subplate mounting), type SEW...450	22058
63 ... 100	WEM., GWMA20, KWM., HWM.	10	Directional seat valve, direct operated (subplate mounting), type SEW...450	22075

☞ **Notes:**
- By combination of a 2-way cartridge valve with a pilot control valve, various valve functions can be realized. Possible pilot control valves according to ISO 4401 see selection table above.
- Version "450" (maximum operating pressure 450 bar) is not described in the data sheets specified in the selection table above, it is, however, available. Please enter "450" instead of "420" in the ordering code.
- Mounting screws for pilot control valves are not included in the scope of delivery.

DIRECTIONAL FUNCTION

Symbols

Version "D" (NG16 ... 100)
Control cover with remote control port

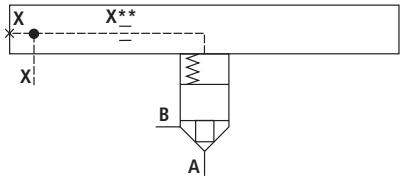

See page 16 and 17

Version "H." (NG16 ... 100)
Control cover with stroke limitation and remote control port

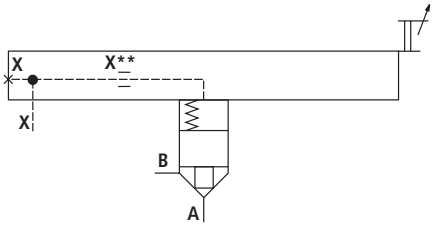

See page 18 ... 23

Version "WEMA", **"WEMB"** (NG16 ... 100)
Control cover for set-up of a directional valve; additional control port (preferably "WEMA")

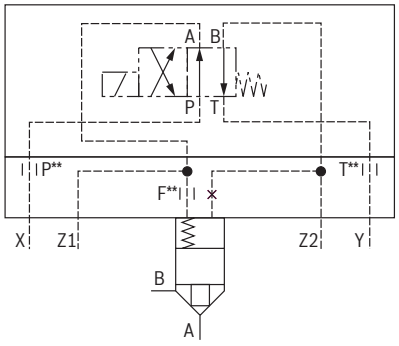

See page 24 ... 29

Version "GWMA20" (NG16 ... 100)
Control cover with two check valves and for set-up of a directional valve; additional control port

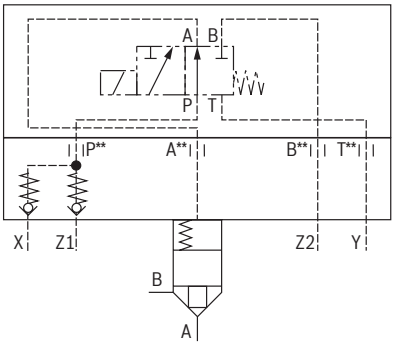

See page 30 ... 37

Version "KWMA" (NG16 ... 100)
Control cover with shuttle valve and for set-up of a directional valve; additional control port

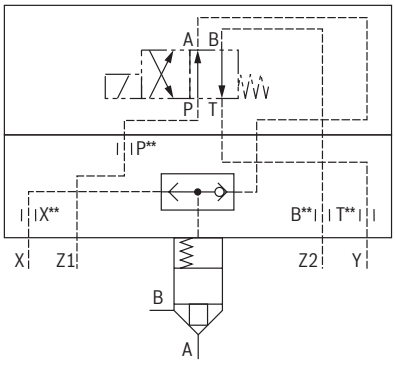

See page 38 ... 43

Version "HWMA", "HWMB" (NG16 ... 63)
Control cover for set-up of a directional valve with stroke limitation

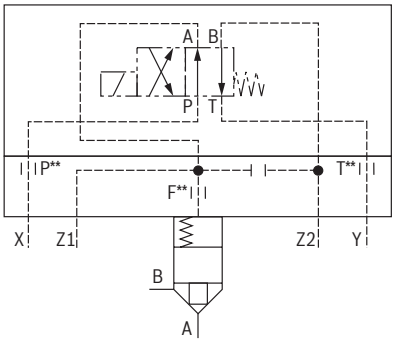

See page 44 ... 47

☞ **Notice:**
Basic symbols:
- ▶ Binding symbols in the following type descriptions
- ▶ Pilot control valves, see page 14, freely selectable

DIRECTIONAL FUNCTION

Control cover "D" with remote control port: NG16 ... 63
(dimensions in mm)

01	02	03		04		05	06	07	08	09	10	11	12
LFA		**D**	**–**	**7X**	**/**	**450**							**1)**

02						10
Size						**Orifice in the channel** (Ø in 1/10 mm)
16	**25**	**32**	**40**	**50**	**63**	**X**** ◿

◿ Orifice possible, if required, specifications have to be made

1) See "Ordering code for control cover type LFA..." page 13.

Type LFA . D...X**

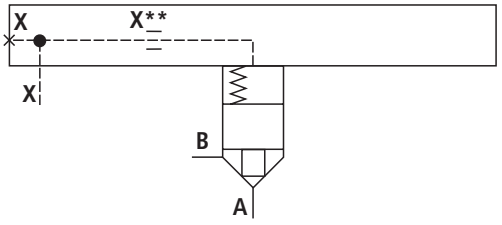

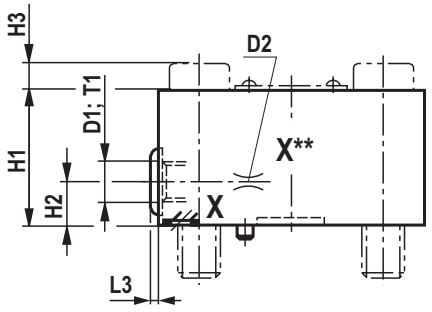

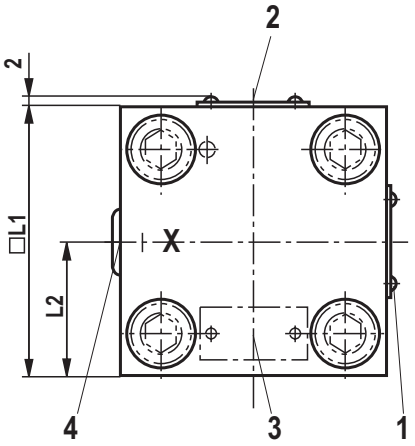

NG	16	25	32	40	50	63
D1	G1/8	G1/4	G1/4	G1/2	G1/2	G3/4
D2 2)	M6	M6	M6	M8 x 1	M8 x 1	G3/8
H1	27	30	35	60	68	82
H2	12	16	16	30	32	40
H3	8	12	16	–	–	–
□ L1	65	85	100	125	140	180
L2	32.5	42.5	50	72	80	90
L3	10	11	11	13	13	13
T1	8	12	12	14	14	16

2) For ordering code of orifices, see page 81.

Mounting screws (see also page 80).

1 Name plate at NG16, 25
2 Name plate at NG32
3 Name plate at NG40, 50, 63
4 Port X optionally as threaded port

Notice:
The dimensions are nominal dimensions which are subject to tolerances.

DIRECTIONAL FUNCTION

Control cover "D" with remote control port: NG80 and 100 (dimensions in mm)

01	02	03		04		05	06	07	08	09	10	11	12
LFA		**D**	**–**	**6X**	**/**	**450**							**1)**

02		10
Size		**Orifice in the channel** (Ø in 1/10 mm)
80	**100**	**X**** ◿

◿ Orifice possible, if required, specifications have to be made

1) See "Ordering code for control cover type LFA..." page 13.

Type LFA . D...X**

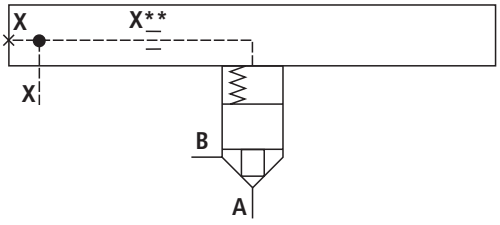

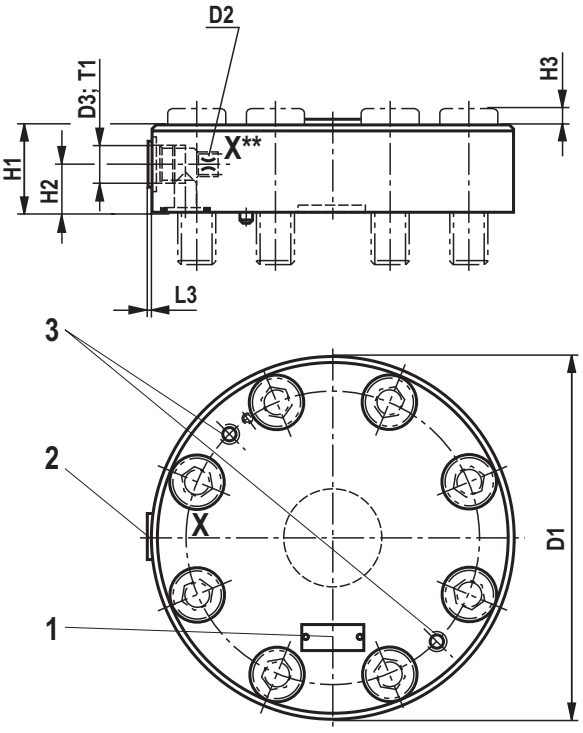

NG	80	100
D1	250	300
D2 2)	G3/8	G1/2
D3	G3/4	G1
H1	70	75
H2	35	40
H3	–	24
L3	11	13
T1	16	18

2) For ordering code of orifices, see page 81.

Mounting screws (see also page 80).

1 Name plate
2 Port X optionally as threaded port
3 Disassembly and handling thread

Notice:
The dimensions are nominal dimensions which are subject to tolerances.

DIRECTIONAL FUNCTION

Control cover "H." with stroke limitation and remote control port: NG16 ... 40

01	02	03		04		05	06	07	08	09	10	11	12
LFA			**–**	**7X**	**/**	**450**							**1)**

02				03	10
Size				**Type**	**Orifice in the channel** (Ø in 1/10 mm)
16	**25**	**32**	**40**	**H1**	**X****
				H2	

⊿ Orifice possible, if required, specifications have to be made

1) See "Ordering code for control cover type LFA..." page 13.

Type LFA . H...X**

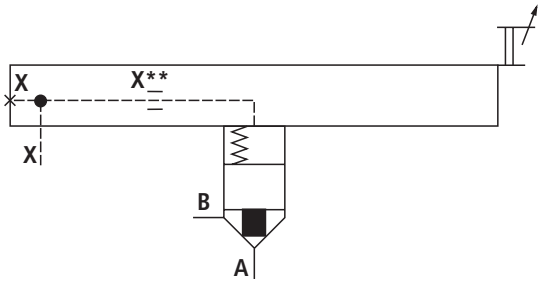

DIRECTIONAL FUNCTION

Control cover "H." with stroke limitation and remote control port: NG16 ... 40
(dimensions in mm)

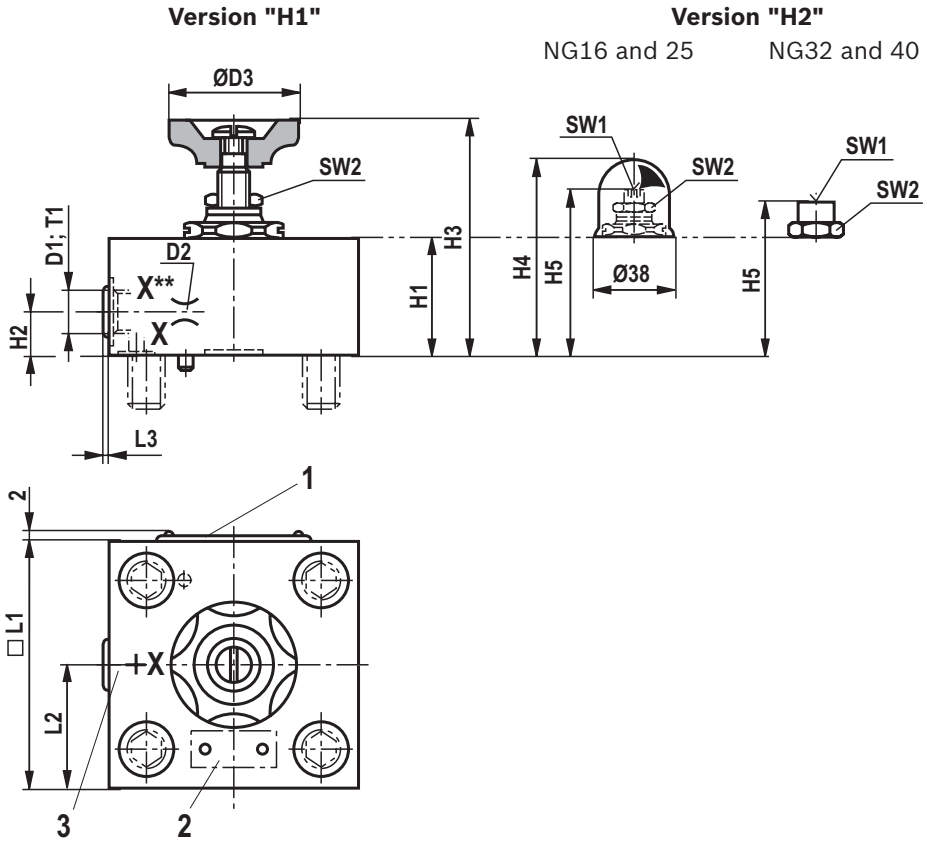

1 Name plate at NG16, 25, 32
2 Name plate at NG40
3 Port X optionally as threaded port

NG	16	25	32	40
D1	G1/8	G1/4	G1/4	G1/2
D2 [2)]	M6	M6	M6	M8 x 1
ØD3	52	80	80	100
H1	35	40	75 (60 [4)])	95 (100 [4)])
H2	12	16	16	30
H3 max	90	95	120	160
H4 max	76	80	100	146
H5 max	45	45	–	–
□ L1	65	85	100	125
L2	32.5	42.5	50	72
L3	10	11	11	13
T1	8	12	12	14
SW1 [3)]	6	6	10	17
SW2	21	22	27	46

[2)] For ordering code of orifices, see page 81.
[3)] Internal hexagon

Mounting screws (see also page 80).

☞ **Notice:**
The dimensions are nominal dimensions which are subject to tolerances.

DIRECTIONAL FUNCTION

Control cover "H." with stroke limitation and remote control port: NG50 and 63

01	02	03		04		05	06	07	08	09	10	11	12
LFA			**–**	**7X**	**/**	**450**							**1)**

02		03	10
Size		**Type**	**Orifice in the channel** (Ø in 1/10 mm)
50	**63**	**H1**	**X****
		H2	

◿ Orifice possible, if required, specifications have to be made

1) See "Ordering code for control cover type LFA..." page 13.

Type LFA . H...X**

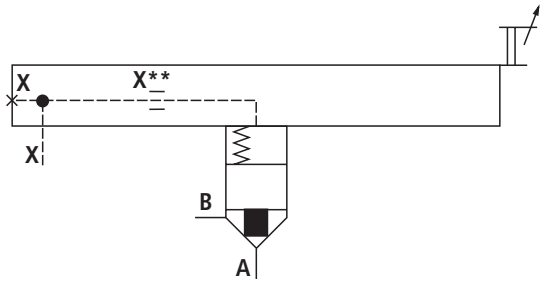

DIRECTIONAL FUNCTION

Control cover "H." with stroke limitation and remote control port: NG50 and 63 (dimensions in mm)

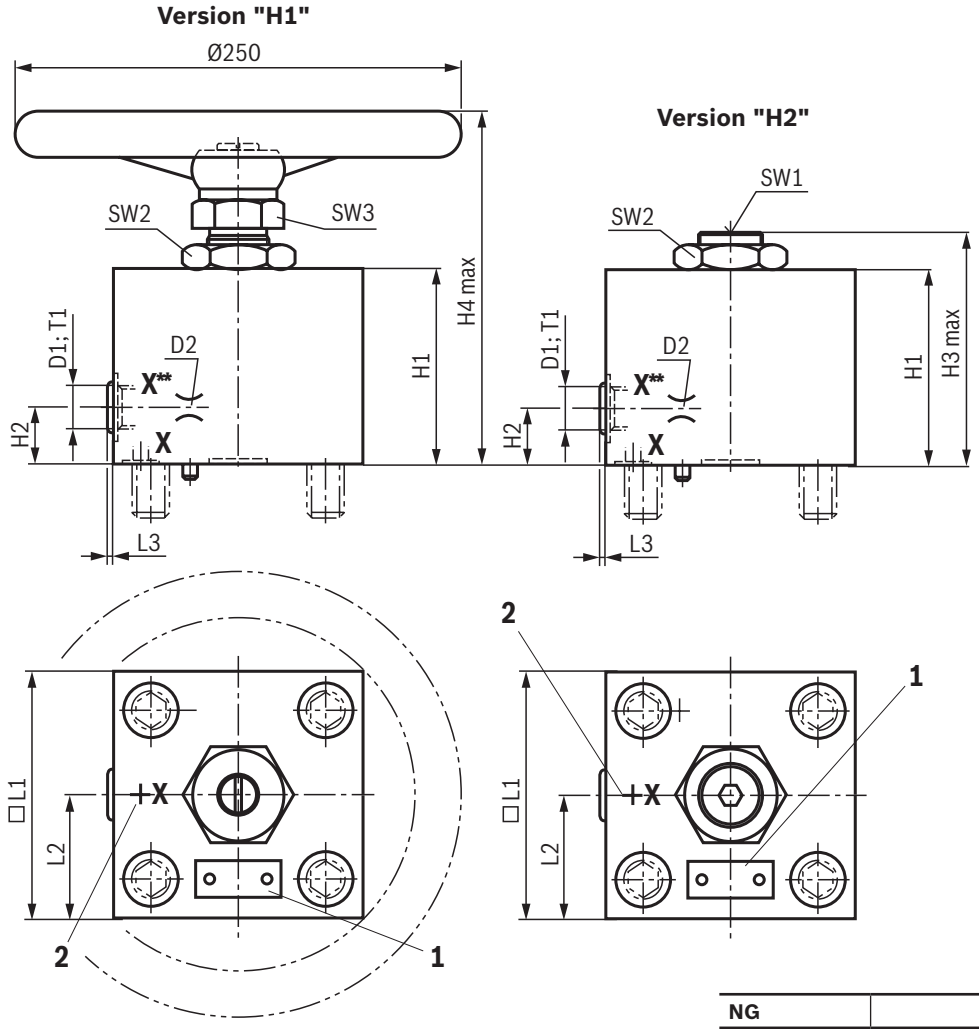

1 Name plate
2 Port X optionally as threaded port
3 Scale
4 countered

NG	50	63
D1	G1/2	G3/4
D2 [2]	M8 x 1	G3/8
H1	110	125
H2	32	40
H3 max	156	175
H4 max	230	250
□ L1	140	180
L2	80	90
L3	13	13
T1	14	16
SW1 [3]	17	22
SW2	55	65
SW3	46	55

[2] For ordering code of orifices, see page 81.
[3] Internal hexagon

Mounting screws (see also page 80).

Notice:
The dimensions are nominal dimensions which are subject to tolerances.

DIRECTIONAL FUNCTION

Control cover "H." with stroke limitation and remote control port: NG80 and 100

01	02	03		04		05	06	07	08	09	10	11	12
LFA		**H2**	**–**	**6X**	**/**	**450**							**1)**

02		10
		Orientation in the channel (Ø in 1/10 mm)
80	**100**	**X**** ◿

◿ Orifice possible, if required, specifications have to be made

1) See "Ordering code for control cover type LFA..." page 13.

Type LFA . H...X**

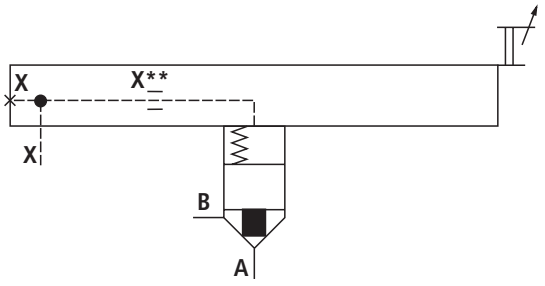

DIRECTIONAL FUNCTION

Control cover "H." with stroke limitation and remote control port: NG80 and 100 (dimensions in mm)

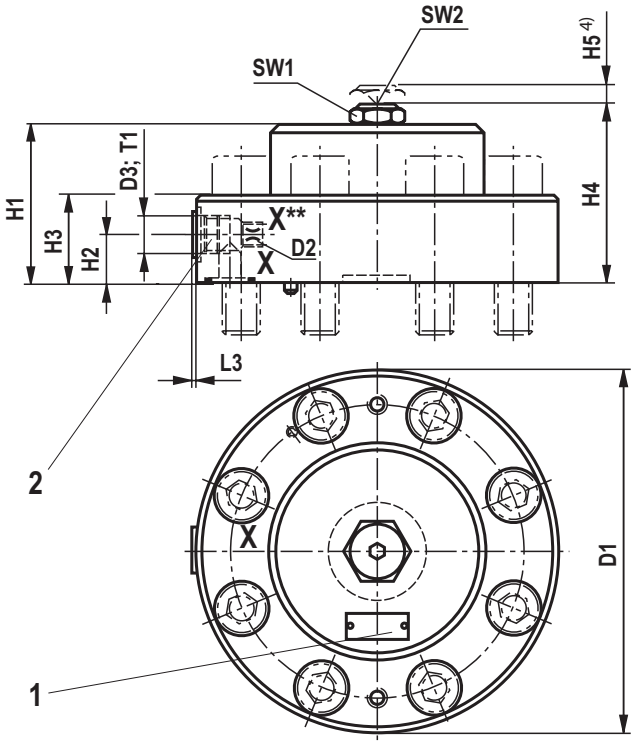

1 Name plate
2 Port X optionally as threaded port
3 Scale
4 countered

NG	80	100
D1	250	300
D2	G3/8	G1/2
D3 2)	G3/4	G1
L3	13	18
H1	114	132
H2	35 (24 4))	35
H3	76	88.5
H4	137	157
H5	30	38
T1	16	18
SW1	75	75
SW2 3)	24	27

2) For ordering code of orifices, see page 81.
3) Internal hexagon
4) Maximum dimension

Mounting screws (see also page 80).

☞ **Notice:**
The dimensions are nominal dimensions which are subject to tolerances.

DIRECTIONAL FUNCTION

Control cover "WEMA" and "WEMB" for set-up of a directional valve: NG16 ... 50

01	02	03		04		05	06	07	08	09	10	11	12
LFA			**–**	**7X**	**/**	**450**							1)

02					03	08	09	11
Size					**Type**	**Orifice in the channel** (Ø in 1/10 mm)		
						P	**T**	**F**
16	**25**	**32**	**40**	**50**	**WEMA**	P** ◿	T** ◿	F** ◿
					WEMB	P** ◿	T** ◿	F** ◿

◿ Orifice possible, if required, specifications have to be made

1) See "Ordering code for control cover type LFA..." page 13.

For ordering code of orifices, see page 81.

LFA . WEMA... (NG16 ... 32)

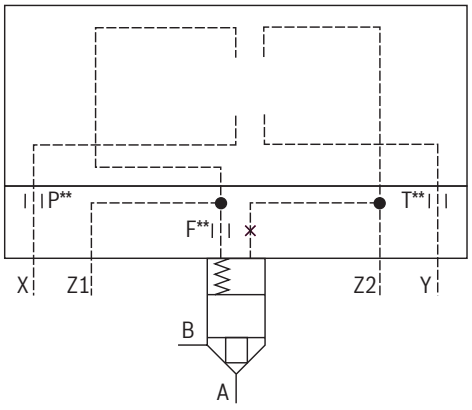

LFA . WEMB... (NG16 ... 32)

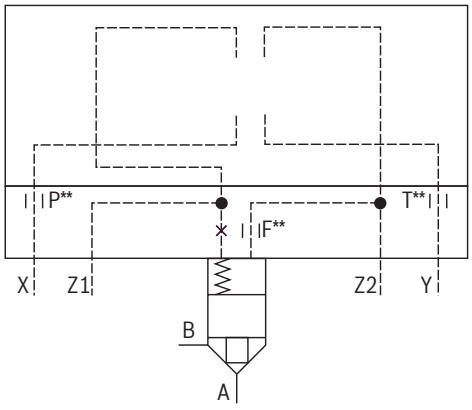

LFA . WEMA... (NG40 and 50)

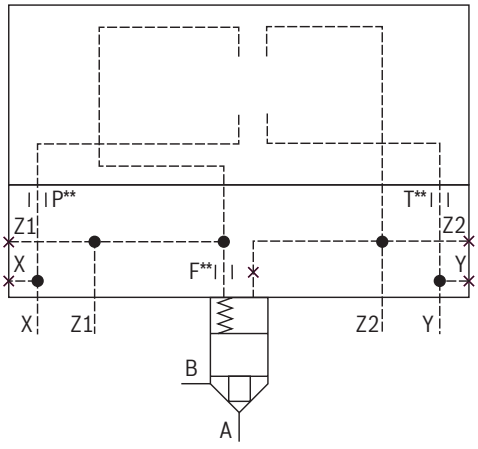

LFA . WEMB... (NG40 and 50)

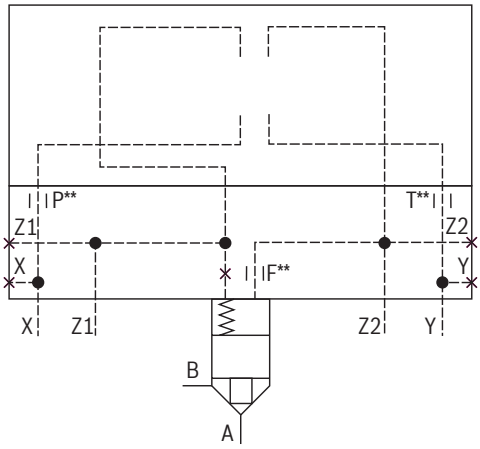

DIRECTIONAL FUNCTION

Control cover "WEMA" and "WEMB" for set-up of a directional valve: NG16 ... 50
(dimensions in mm)

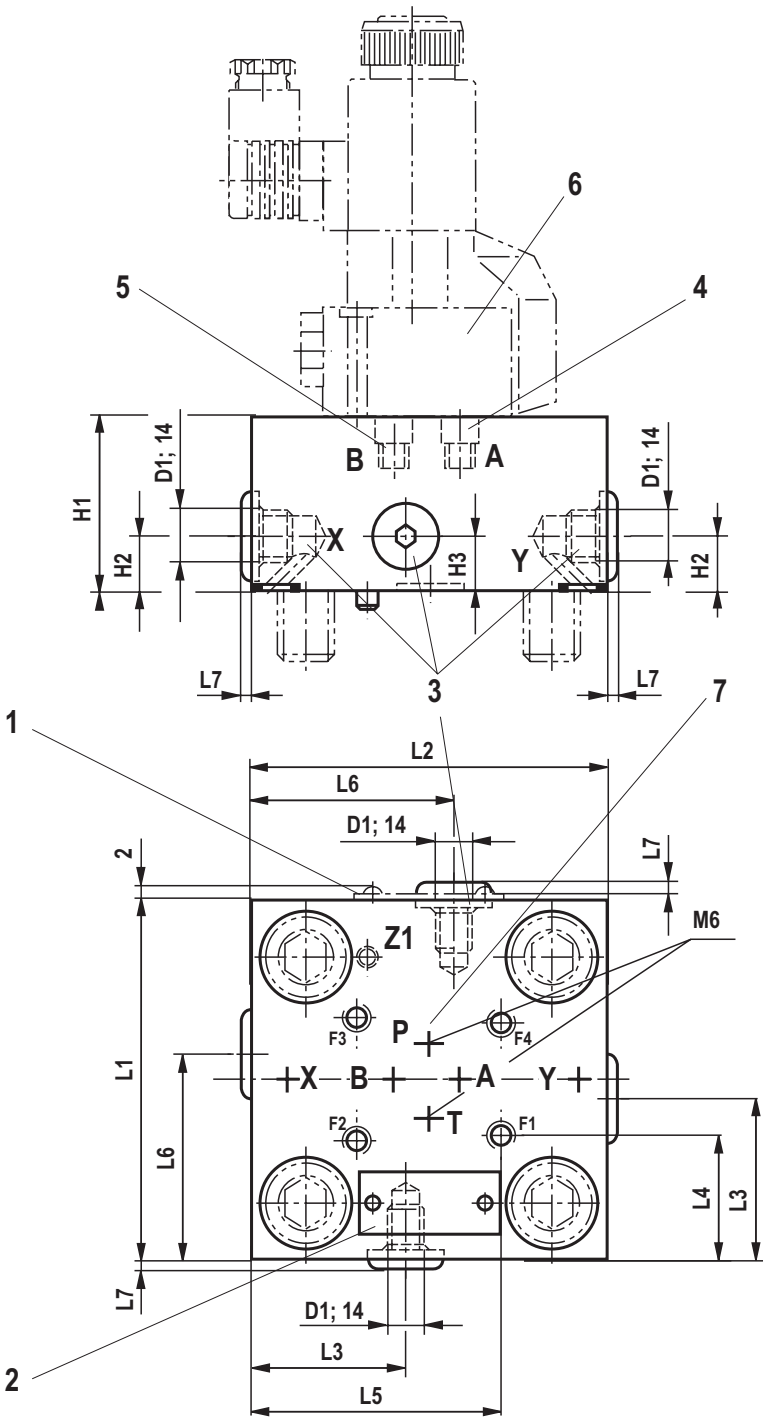

NG	16	25	32	40	50
D1	–	–	–	G1/2	G1/2
H1	65	40	50	60	68
H2	–	–	–	30	32
H3	–	–	–	30	32
L1	65	85	100	125	140
L2	80	85	100	125	140
L3	–	–	–	53	60
L4	17	27	34.5	47	54.5
L5	47.5	64	71.5	84	91.5
L6	–	–	–	72	80
L7	–	–	–	13	13

Mounting screws (see also page 80).

☞ **Notice:**
The dimensions are nominal dimensions which are subject to tolerances.

1 Name plate at NG16, 25, 32
2 Name plate at NG40 and 50
3 Ports X, Y, Z1 and Z2 optionally as threaded ports at NG40 and 50
4 Plug screw M6 with type WEMB
5 Plug screw M6 with type WEMA
6 Directional seat valve type M-3SEW 6 ...450 (pilot control valve), separate order, see page 14
7 Porting pattern according to ISO 4401-03-02-0-05

DIRECTIONAL FUNCTION

Control cover "WEMA" and "WEMB" for set-up of a directional valve: NG63

01	02	03		04		05	06	07	08	09	10	11	12
LFA	**63**		**–**	**7X**	**/**	**450**							**1)**

03	08	09	11
Type	**Orifice in the channel** (Ø in 1/10 mm)		
	P	**T**	**F**
WEMA	P** ◿	T** ◿	F** ◿
WEMB	P** ◿	T** ◿	F** ◿

◿ Orifice possible, if required, specifications have to be made

1) See "Ordering code for control cover type LFA..." page 13.

For ordering code of orifices, see page 81.

LFA 63 WEMA...

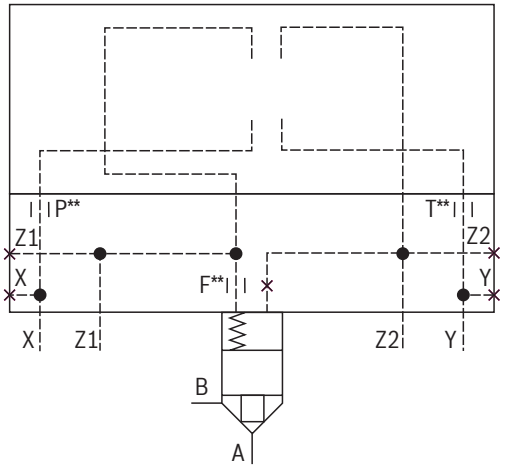

LFA 63 WEMB...

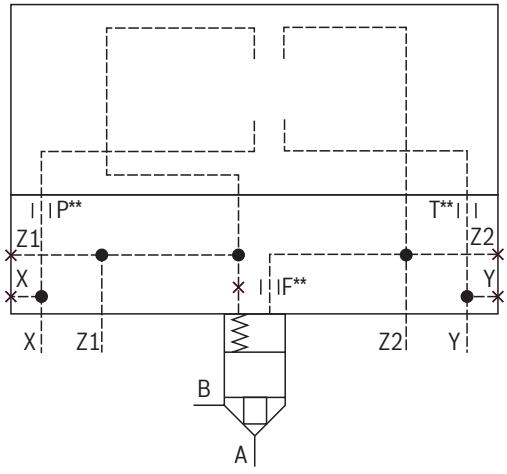

DIRECTIONAL FUNCTION

Control cover "WEMA" and "WEMB" for set-up of a directional valve: NG63
(dimensions in mm)

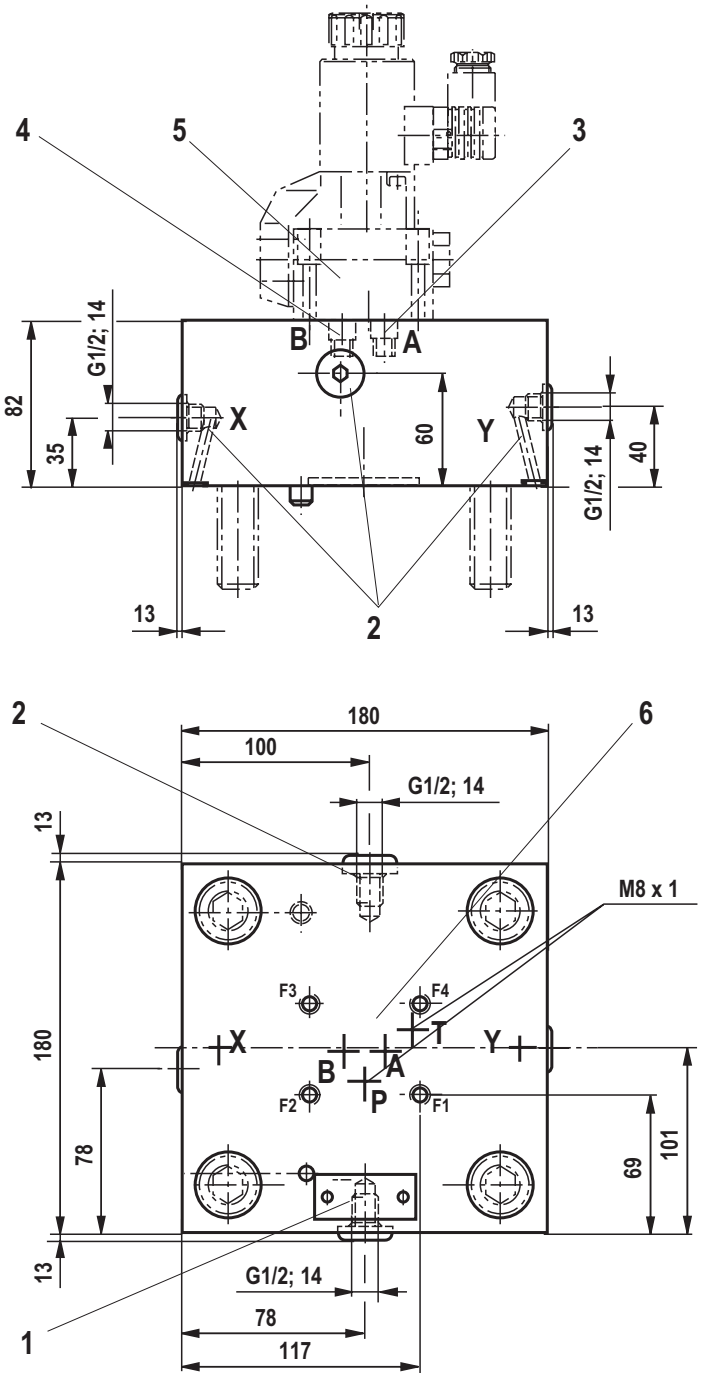

1 Name plate
2 Ports X, Y, Z1 and Z2 optionally as threaded ports
3 Plug screw M8 x 1 with type WEMB
4 Plug screw M8 x 1 with type WEMA
5 Directional seat valve type M-3SEW 10 ...450 (pilot control valve), separate order, see page 14
6 Porting pattern according to ISO 4401-05-04-0-05

Mounting screws (see also page 80).

Notice:
The dimensions are nominal dimensions which are subject to tolerances.

DIRECTIONAL FUNCTION

Control cover "WEMA" and "WEMB" for set-up of a directional valve: NG80 and 100

01	02	03	04		05	06	07	08	09	10	11	12
LFA			**–**	**6X**	**/**	**450**						**1)**

02		03	08	09	11
Size		**Type**	**Orifice in the channel** (Ø in 1/10 mm)		
			P	**T**	**F**
80	**100**	**WEMA**	P** ◿	T** ◿	F** ◿
		WEMB	P** ◿	T** ◿	F** ◿

◿ Orifice possible, if required, specifications have to be made

1) See "Ordering code for control cover type LFA..." page 13.

For ordering code of orifices, see page 81.

LFA . WEMA... (NG80 and 100)

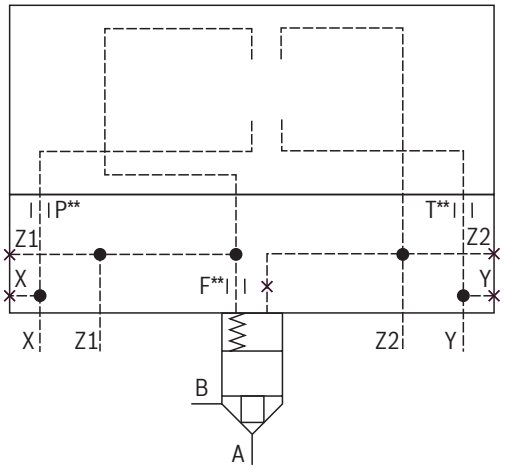

LFA . WEMB... (NG80 and 100)

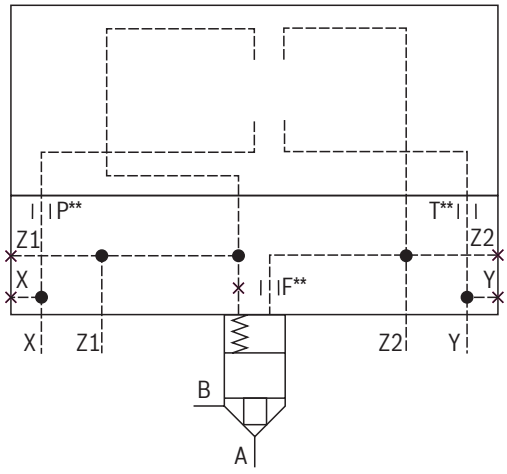

DIRECTIONAL FUNCTION

Control cover "WEMA" and "WEMB" for set-up of a directional valve: NG80 and 100 (dimensions in mm)

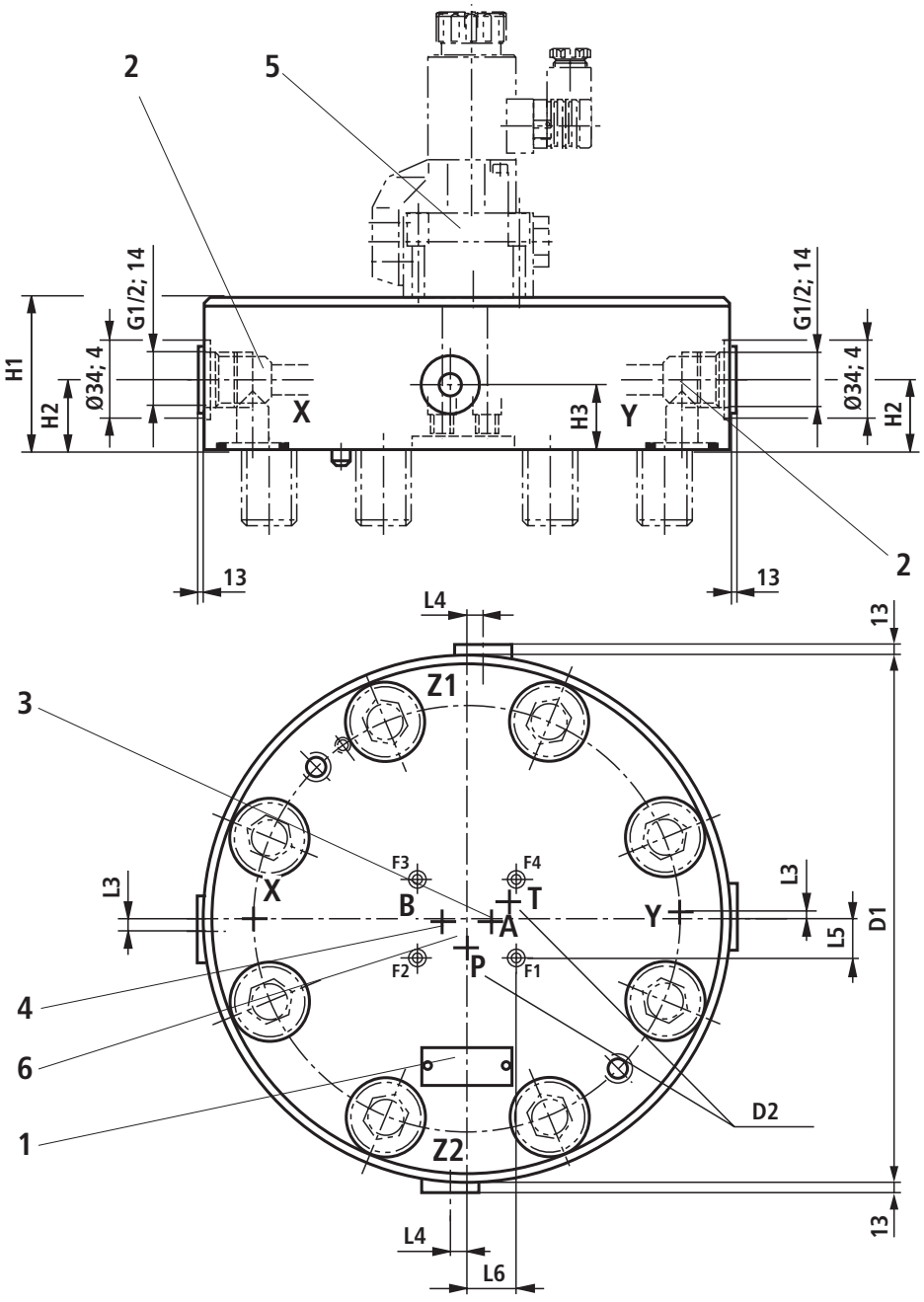

NG	80	100
D1	250	300
D2	G1/8	G1/8
H1	80	100
H2	42	55
H3	26	35
L3	10	13
L4	10	9.5
L5	16	27
L6	27	26

1 Name plate
2 Ports X, Y, Z1 and Z2 optionally as threaded ports
3 Plug screw G1/8 with type WEMB
4 Plug screw G1/8 with type WEMA
5 Directional seat valve type M-3SEW 10 ...450 (pilot control valve), separate order, see page 14
6 Porting pattern according to ISO 4401-05-04-0-05

Mounting screws (see also page 80).

Notice:
The dimensions are nominal dimensions which are subject to tolerances.

DIRECTIONAL FUNCTION

Control cover "GWMA20" for set-up of a directional valve: NG16

01	02	03		04		05	06	07	08	09	10	11	12
LFA	**16**	**GWMA20**	**–**	**7X**	**/**	**450**							**1)**

06	07	08	09
Orifice in the channel (Ø in 1/10 mm)			
A	**B**	**P**	**T**
A** ◿	B** ◿	P** ◿	T** ◿

◿ Orifice possible, if required, specifications have to be made

1) See "Ordering code for control cover type LFA..." page 13.

For ordering code of orifices, see page 81.

LFA 16 GWMA20...

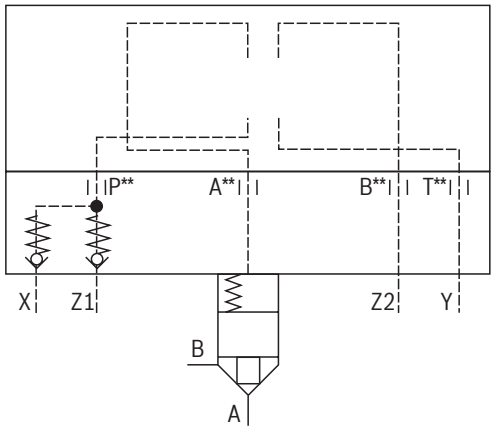

DIRECTIONAL FUNCTION

Control cover "GWMA20" for set-up of a directional valve: NG16
(dimensions in mm)

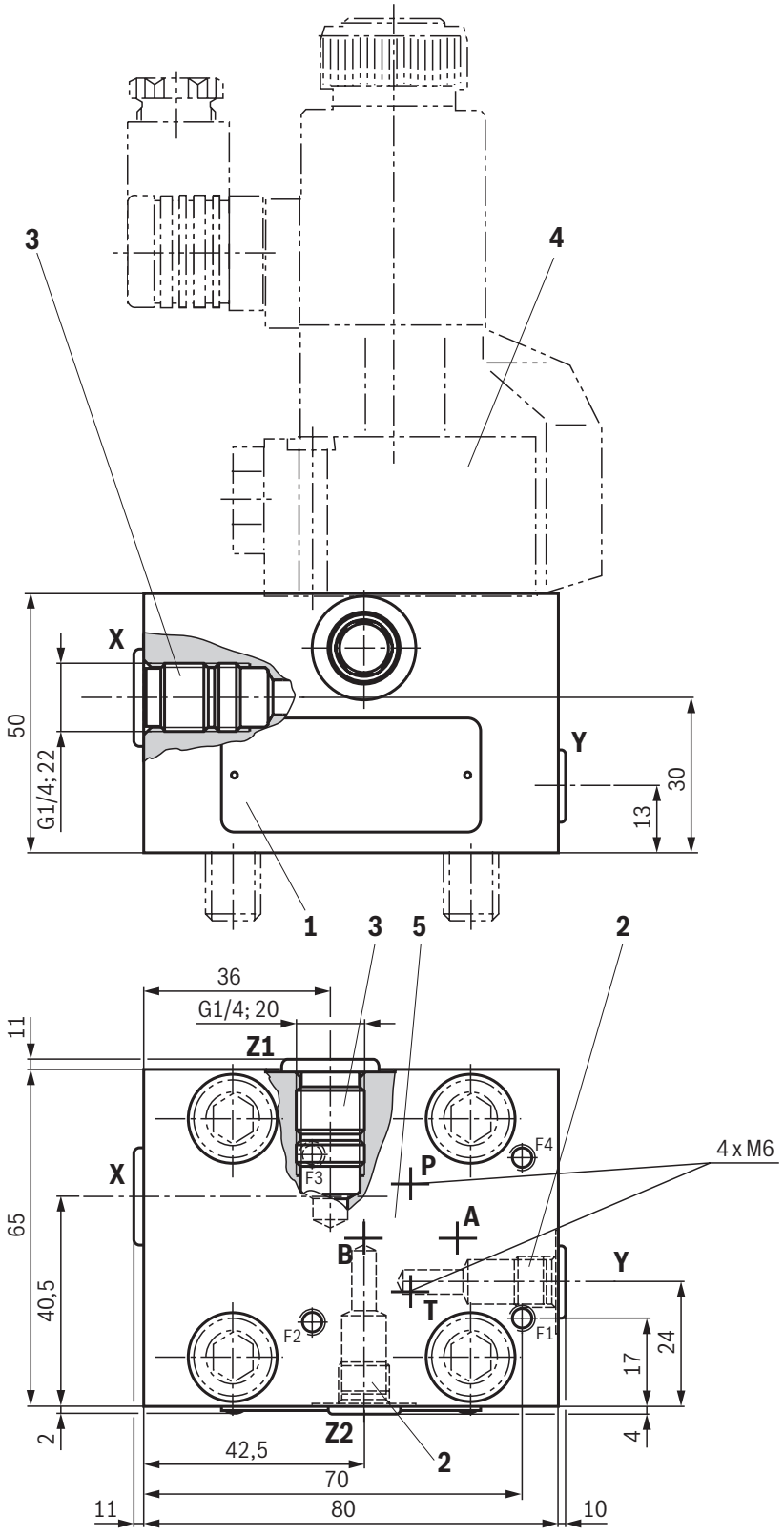

1 Name plate
2 Port X and Z1 with check valve
3 Port Y and Z2 with threaded connection
4 Directional seat valve type M-3SEW 6 ...450 (pilot control valve), separate order, see page 14
5 Porting pattern according to ISO 4401-03-02-0-05

Mounting screws (see also page 80).

Notice:
The dimensions are nominal dimensions which are subject to tolerances.

DIRECTIONAL FUNCTION

Control cover "GWMA20" for set-up of a directional valve: NG25 ... 40

01	02	03	04		05	06	07	08	09	10	11	12
LFA		**GWMA20**	**–**	**7X**	**/**	**450**						**1)**

02			06	07	08	09
Size			**Orifice in the channel** (Ø in 1/10 mm)			
			A	**B**	**P**	**T**
25	**32**	**40**	A** ◿	B** ◿	P** ◿	T** ◿

◿ Orifice possible, if required, specifications have to be made

1) See "Ordering code for control cover type LFA..." page 13.

For ordering code of orifices, see page 81.

LFA . GWMA20... (NG25 ... 40)

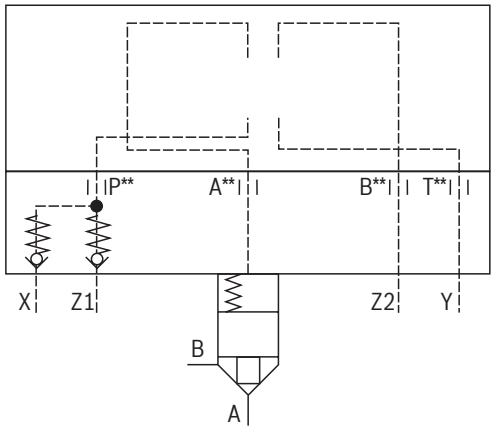

DIRECTIONAL FUNCTION

Control cover "GWMA20" for set-up of a directional valve: NG25 ... 40
(dimensions in mm)

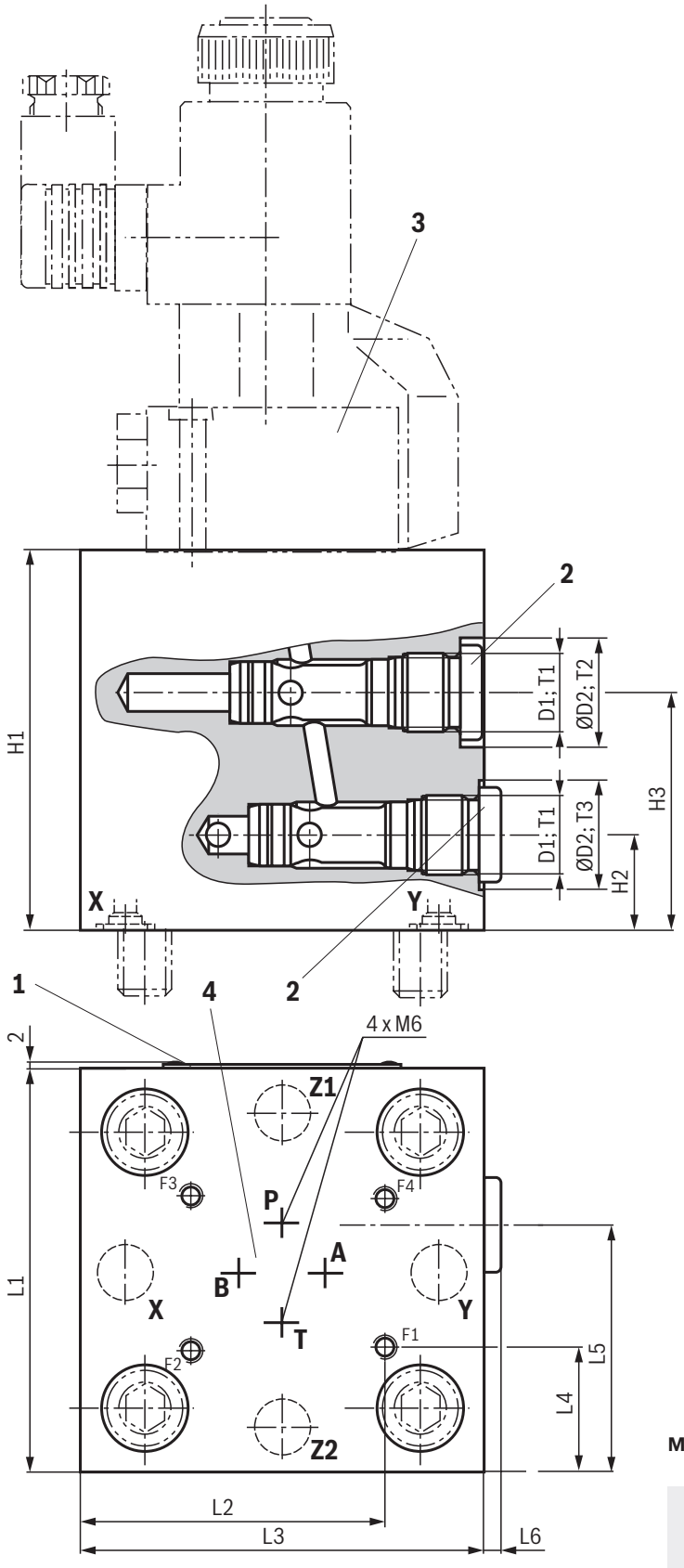

1 Name plate
2 Port X and Y with check valve
3 Directional seat valve type M-3SEW 6 ...450 (pilot control valve), separate order, see page 14
4 Porting pattern according to ISO 4401-03-02-0-05

NG	25	32	40
H1	80	80	90
H2	20	20	30
H3	50	50	60
L1	85	100	125
L2	64	71.5	84
L3	85	100	125
L4	27	34.5	47
L5	52	60	73
L6	10	10	6
D1	G3/8	G3/8	G3/8
ØD2	23	23	23
T1	12	12	12
T2	5	10	20
T3	1	1	5

Mounting screws (see also page 80).

Notice:
The dimensions are nominal dimensions which are subject to tolerances.

DIRECTIONAL FUNCTION

Control cover "GWMA20" for set-up of a directional valve: NG50 and 63

01	02	03		04		05	06	07	08	09	10	11	12
LFA		**GWMA20**	**–**	**7X**	**/**	**450**							**1)**

02		06	07	08	09
Size		**Orifice in the channel** (Ø in 1/10 mm)			
		A	**B**	**P**	**T**
50	**63**	A** ◿	B** ◿	P** ◿	T** ◿

◿ Orifice possible, if required, specifications have to be made

1) See "Ordering code for control cover type LFA..." page 13.

For ordering code of orifices, see page 81.

LFA . GWMA20... (NG50 and 63)

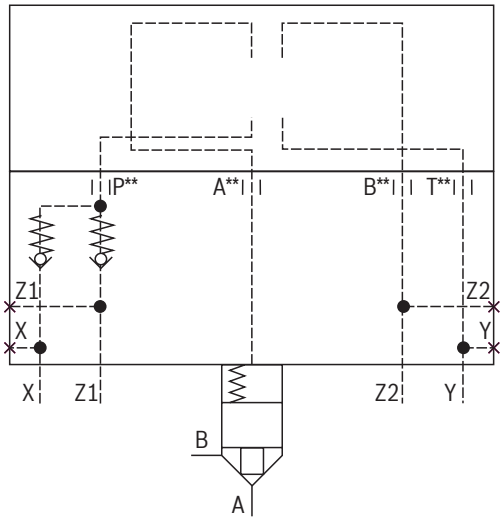

DIRECTIONAL FUNCTION

Control cover "GWMA20" for set-up of a directional valve: NG50 and 63
(dimensions in mm)

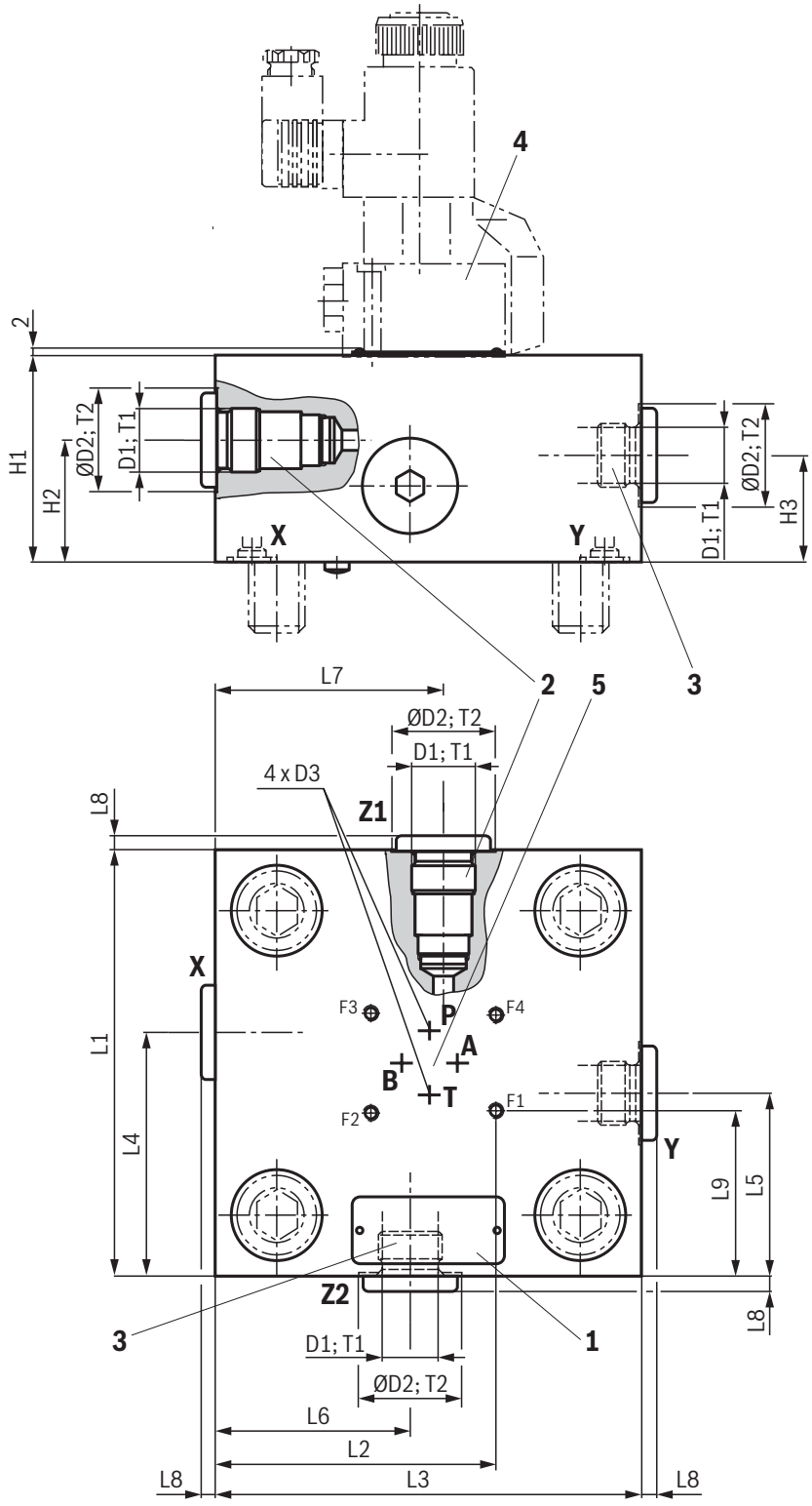

NG	50	63
D1	G1/2	G1/2
ØD2	34	34
D3	M6	M8x1
H1	68	82
H2	40	48
H3	35	63
L1	140	180
L2	92	120.5
L3	140	180
L4	80	99
L5	60	81
L6	80	80
L7	90	90
L8	13	13
L9	54.5	70
T1	14	14
T2	0.5	0.5

1 Name plate
2 Port X and Z1 with check valve
3 Port Z2 and Y with threaded connection
4 Directional seat valve (pilot control valve)
▶ NG50: Type M-3SEW 6 ...450
▶ NG63: Type M-3SEW 10 ...450, separate order, see page 14
5 Porting pattern according to ISO 4401-03-02-0-05

Notice:
The dimensions are nominal dimensions which are subject to tolerances.

Mounting screws (see also page 80).

DIRECTIONAL FUNCTION

Control cover "GWMA20" for set-up of a directional valve: NG80 and 100

01	02	03		04		05	06	07	08	09	10	11	12
LFA		**GWMA20**	**–**	**7X**	**/**	**450**							**1)**

02		06	07	08	09
Size		**Orifice in the channel** (Ø in 1/10 mm)			
		A	**B**	**P**	**T**
80	**100**	A** ◿	B** ◿	P** ◿	T** ◿

◿ Orifice possible, if required, specifications have to be made

1) See "Ordering code for control cover type LFA..." page 13.

For ordering code of orifices, see page 81.

LFA . GWMA20... (NG80 and 100)

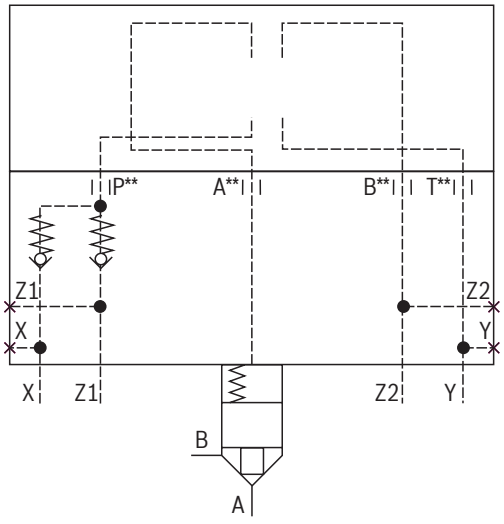

DIRECTIONAL FUNCTION

Control cover "GWMA20" for set-up of a directional valve: NG80 and 100
(dimensions in mm)

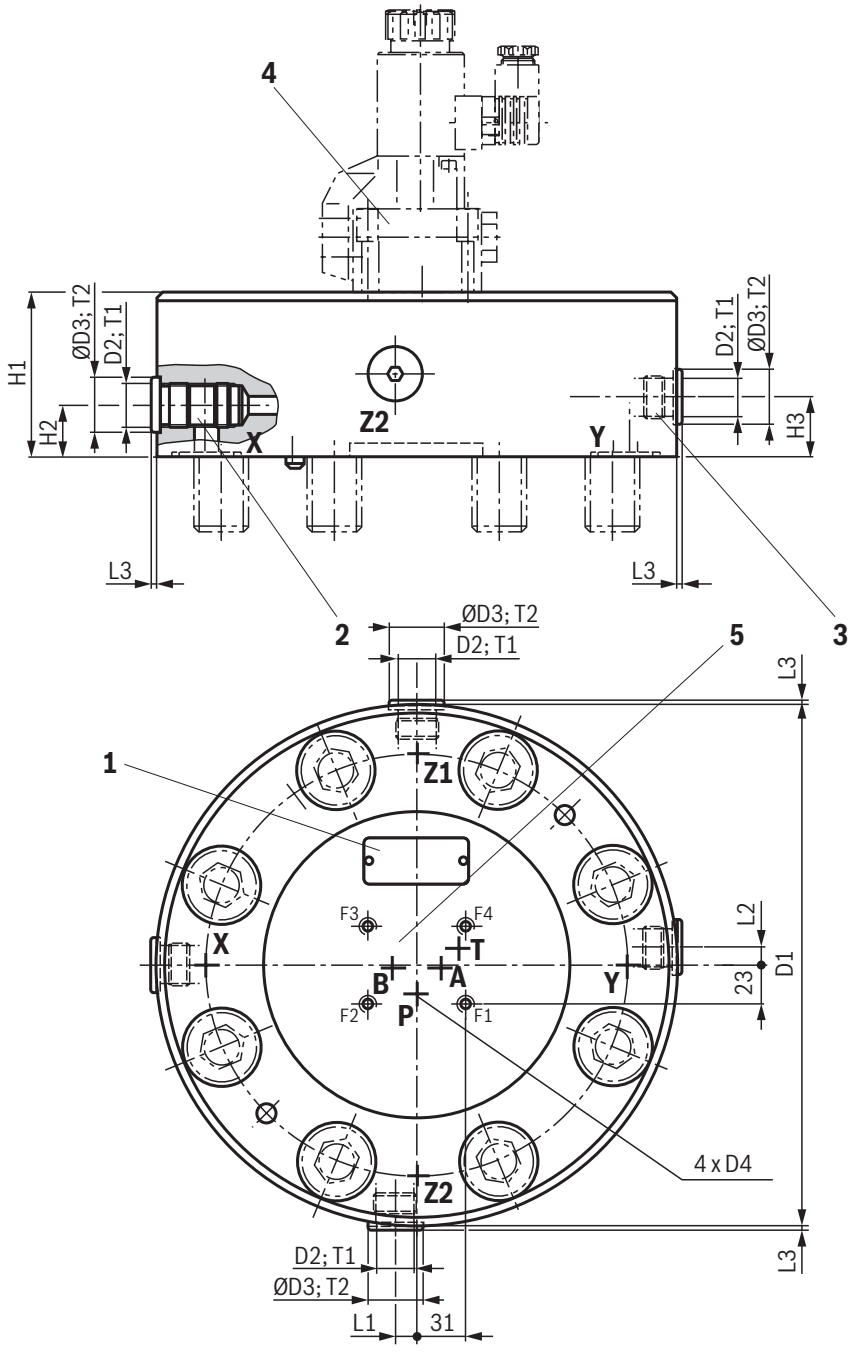

NG	80	100
D1	250	300
D2	G1/2	G1/2
ØD3	34	34
D4	M8 x 1	G1/8
H1	80	110
H2	25	30
H3	30	35
L1	10	10
L2	9	9
L3	13	13
T1	14	14
T2	3	3

Mounting screws (see also page 80).

☞ **Notice:**
The dimensions are nominal dimensions which are subject to tolerances.

1 Name plate
2 Port X and Z1 with check valve
3 Port Y and Z2 with threaded connection
4 Directional seat valve type M-3SEW 10 ...450 (pilot control valve), separate order, see page 14
5 Porting pattern according to ISO 4401-05-04-0-05

DIRECTIONAL FUNCTION

Control cover "KWMA" for set-up of a directional valve: NG16 ... 32

01	02	03	04		05	06	07	08	09	10	11	12
LFA		**KWMA**	**–**	**7X**	**/**	**450**						**1)**

02	06	07	08	09	10
Size	**Orifice in the channel** (Ø in 1/10 mm)				
	A	**B**	**P**	**T**	**X**
16	A** ◿	B** ◿	P15 ◿	T** ◿	X15 ◿
25	A** ◿	B** ◿	P15 ◿	T** ◿	Ø2.0 ◢
32	A** ◿	B** ◿	P20 ◿	T** ◿	Ø2.5 ◢

◿ Orifice possible, if required, specifications have to be made
◢ Orifice bored (Ø in mm) (does not appear in the type designation)
◿ Standard orifice (Ø in 1/10 mm) (does not appear in the type designation)
1) See "Ordering code for control cover type LFA..." page 13.
For ordering code of orifices, see page 81.

LFA 16 KWMA...

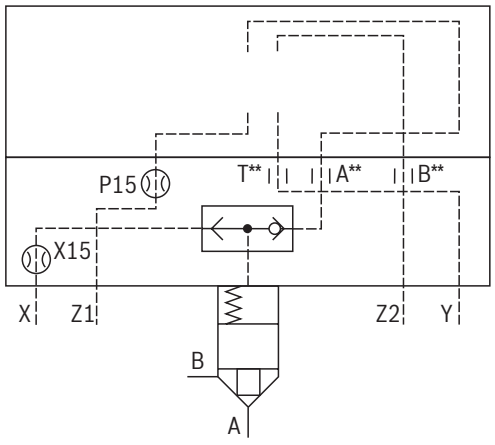

LFA . KWMA... (NG25 and 32)

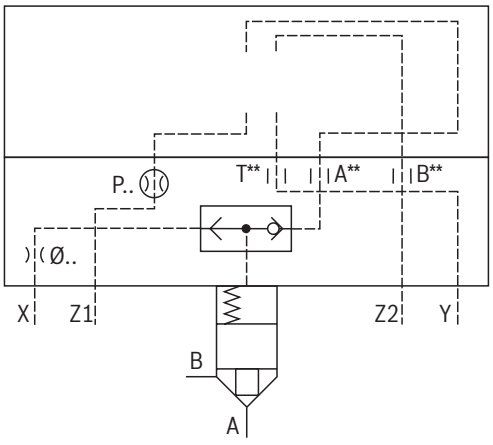

DIRECTIONAL FUNCTION

Control cover "KWMA" for set-up of a directional valve: NG16 ... 32
(dimensions in mm)

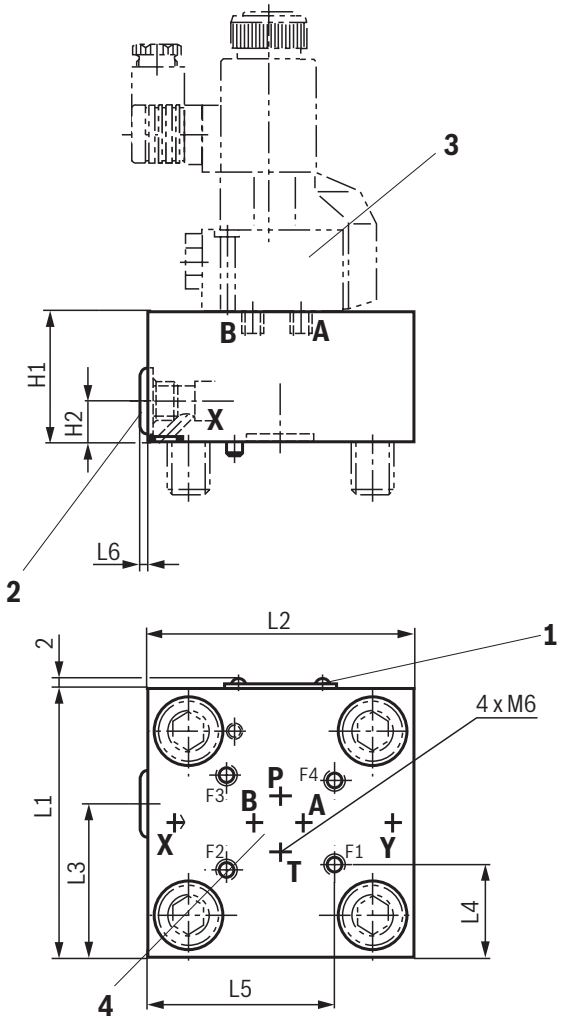

1 Name plate
2 Shuttle valve
3 Directional seat valve type M-3SEW 6 ...450 (pilot control valve), separate order, see page 14
4 Porting pattern according to ISO 4401-03-02-0-05

NG	16	25	32
H1	40	40	50
H2	17	17	21.5
L1	65	85	100
L2	80	85	100
L3	36.5	45.5	50
L4	17	27	34.5
L5	47.5	64	71.5
L6	11	11	11

Mounting screws (see also page 80).

☞ **Notice:**
The dimensions are nominal dimensions which are subject to tolerances.

DIRECTIONAL FUNCTION

Control cover "KWMA" for set-up of a directional valve: NG40 ... 63

01	02	03	04		05	06	07	08	09	10	11	12
LFA		**KWMA**	**–**	**7X**	**/**	**450**						**1)**

02	06	07	08	09	10
Size	**Orifice in the channel** (Ø in 1/10 mm)				
	A	**B**	**P**	**T**	**X**
40	A** ◿	B** ◿	P20 ◿	T** ◿	X30 ◿
50	A** ◿	B** ◿	P20 ◿	T** ◿	X30 ◿
63	A** ◿	B** ◿	P25 ◿	T** ◿	X** ◿

◿ Orifice possible, if required, specifications have to be made
◿ Standard orifice (Ø in 1/10 mm) (does not appear in the type designation)
1) See "Ordering code for control cover type LFA..." page 13.
For ordering code of orifices, see page 81.

LFA . KWMA... (NG40 and 50)

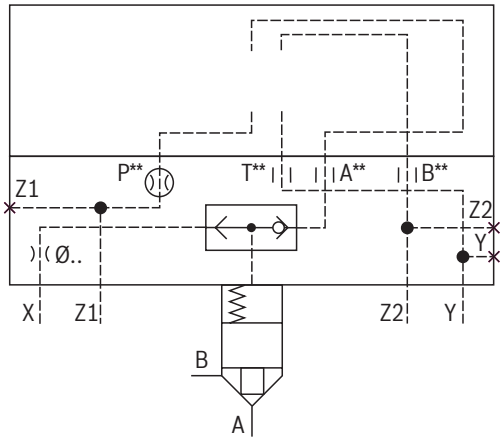

LFA 63 KWMA...

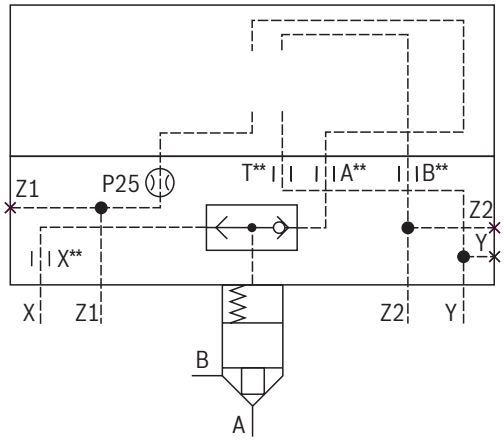

DIRECTIONAL FUNCTION

Control cover "KWMA" for set-up of a directional valve: NG40 ... 63
(dimensions in mm)

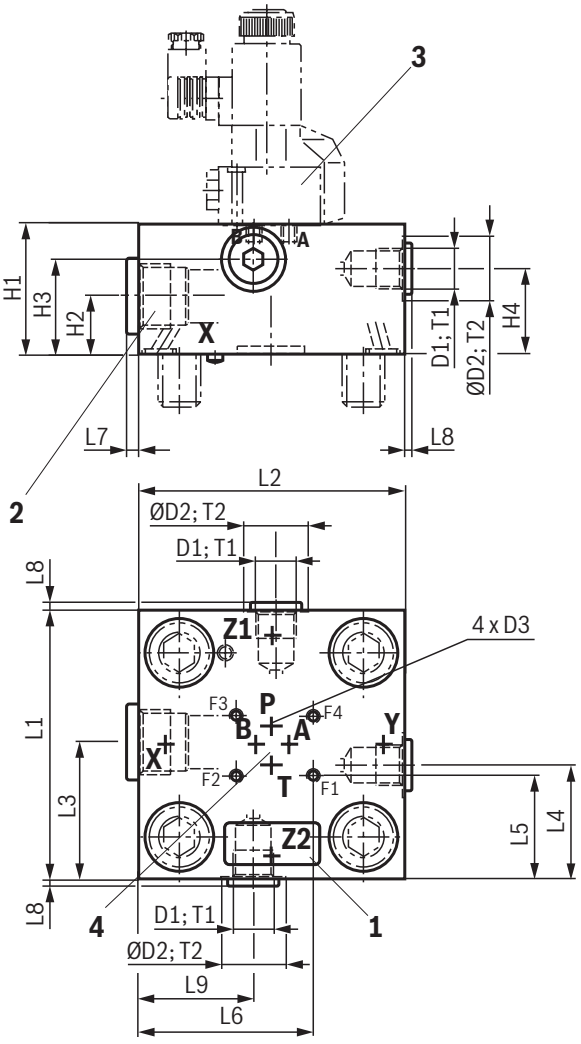

1 Name plate

2 Shuttle valve

3 Directional seat valve (pilot control valve)
- ▶ NG40 and 50: Type M-3SEW 6 ...450
- ▶ NG63: Type M-3SEW 10 ...450,

separate order, see page 14

4 Porting pattern according to ISO 4401-03-02-0-05 (NG40 and 50) or ISO 4401-05-04-0-05 (NG63)

NG	40	50	63
D1	G1/2	G1/2	G1/2
ØD2	34	34	34
D3	M6	M6	M8
H1	60	68	82
H2	30	31	42
H3	41	45	60
H4	30	50	28
L1	125	140	180
L2	125	140	180
L3	62.5	72	90
L4	53	60	101
L5	47	54.5	68.5
L6	84	91.5	117
L7	11	18	18
L8	13	13	13
T1	14	14	14
T2	1	1	1

Mounting screws (see also page 80).

Notice:
The dimensions are nominal dimensions which are subject to tolerances.

DIRECTIONAL FUNCTION

Control cover "KWMA" for set-up of a directional valve: NG80 and 100

01	02	03	04		05	06	07	08	09	10	11	12
LFA		**KWMA**	**–**	**7X**	**/**	**450**						**1)**

02		06	07	08	09	10
Size		**Orifice in the channel** (Ø in 1/10 mm)				
		A	**B**	**P**	**T**	**X**
80	**100**	A** ◿	B** ◿	P25 ◿	T** ◿	X20 ◿

◿ Orifice possible, if required, specifications have to be made
◿ Standard orifice (Ø in 1/10 mm) (does not appear in the type designation)
1) See "Ordering code for control cover type LFA..." page 13.
For ordering code of orifices, see page 81.

LFA . KWMA... (NG80 and 100)

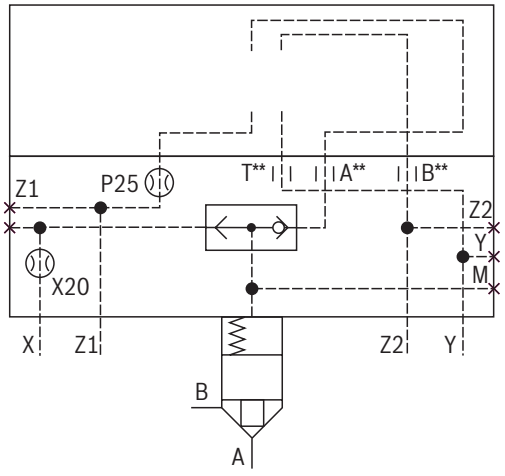

DIRECTIONAL FUNCTION

Control cover "KWMA" for set-up of a directional valve: NG80 and 100
(dimensions in mm)

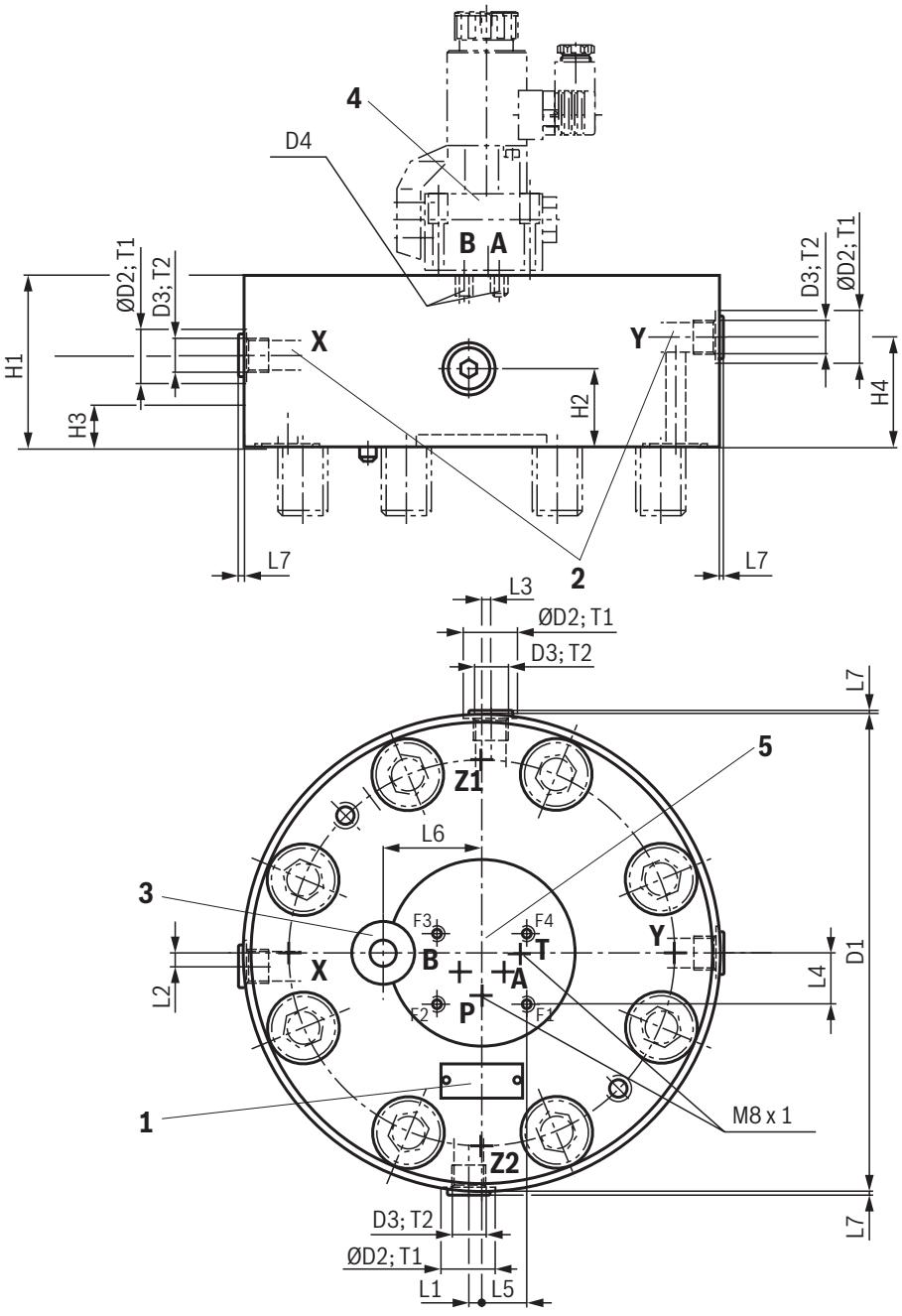

NG	80	100
D1	250	300
ØD2	34	34
D3	G1/2	G1/2
D4	M8 x 1	G1/8
H1	100	110
H2	40	50
H3	19.5	27
H4	60	70
L1	8	8
L2	6.5	5
L3	6.5	6
L4	31	31
L5	27	27
L6	55	62
L7	13	13
T1	14	14
T2	4	3

1 Name plate
2 Port X and Y optionally as threaded ports
3 Shuttle valve
4 Directional seat valve type M-3SEW 10 ...450 (pilot control valve), separate order, see page 14
5 Porting pattern according to ISO 4401-05-04-0-05

Mounting screws (see also page 80).

Notice:
The dimensions are nominal dimensions which are subject to tolerances.

DIRECTIONAL FUNCTION

Control cover "HWMA." and **"HWMB."** for set-up of a directional valve: NG16 ... 40

01	02	03	04		05	06	07	08	09	10	11	12
LFA			**–**	**7X**	**/**	**450**						**1)**

02	03	08	09	10
Size	**Type**	**P**	**T**	**F**
16	**HWMA1**	P** ◿	T** ◿	F** ◿
25	**HWMA2**	P** ◿	T** ◿	F** ◿
32	**HWMB1**	P** ◿	T** ◿	F** ◿
40	**HWMB2**	P** ◿	T** ◿	F** ◿

◿ Orifice possible, if required, specifications have to be made

1) See "Ordering code for control cover type LFA..." page 13.

For ordering code of orifices, see page 81.

LFA . HWMA... (NG16 ... 40)

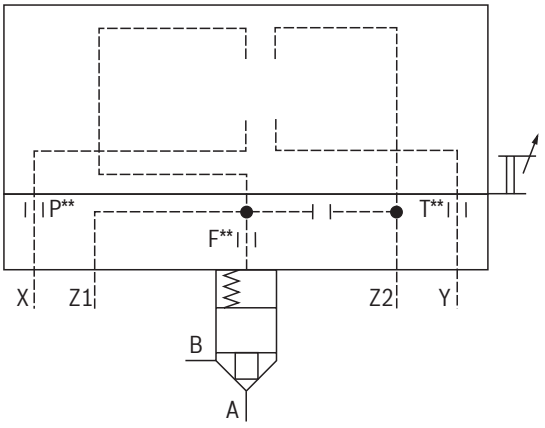

LFA . HWMB... (NG16 ... 40)

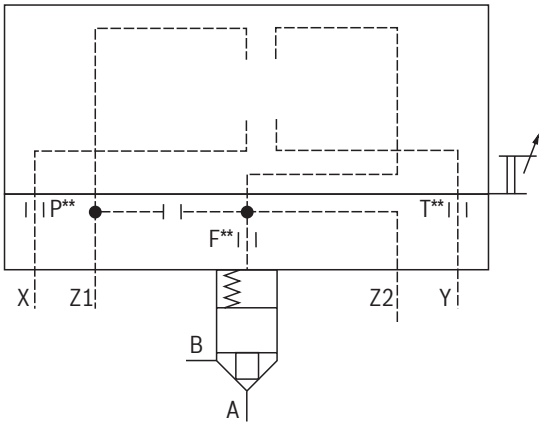

DIRECTIONAL FUNCTION

Control cover "HWMA." and **"HWMB."** for set-up of a directional valve: NG16 ... 40 (dimensions in mm)

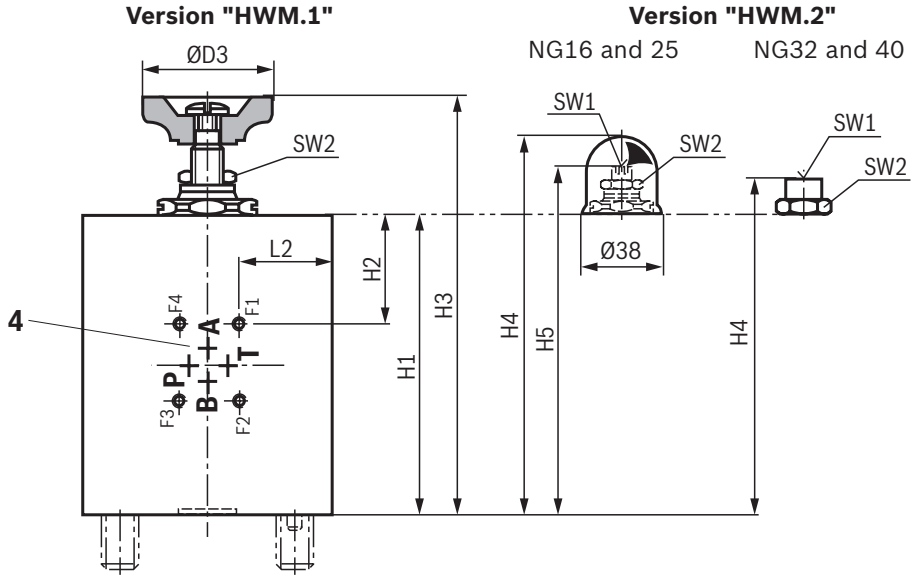

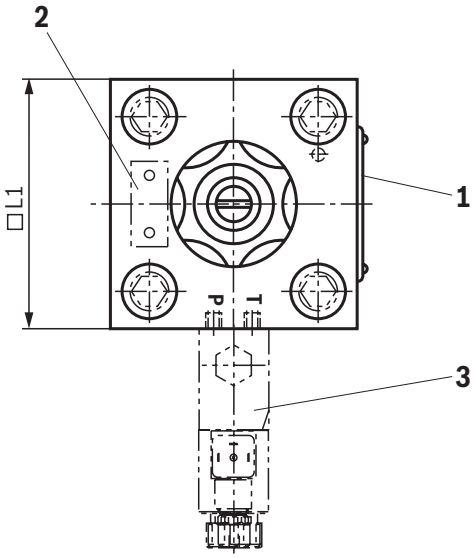

1 Name plate at NG16, 25, 32

2 Name plate at NG40

3 Directional seat valve type M-3SEW 6 ...450 (pilot control valve), separate order, see page 14

4 Porting pattern according to ISO 4401-03-02-0-05

Mounting screws (see also page 80).

☞ **Notice:**
The dimensions are nominal dimensions which are subject to tolerances.

NG	16	25	32	40
ØD3	52	80	80	100
H1	90	90	100	95
H2	21.5	21.5	31.5	19.5
H3 max	145	145	145	160
H4 max	131	130	125	146
H5 max	100	95	–	–
□ L1	65	85	100	125
L2	17	27	34.5	57
SW1 [1)]	6	6	10	17
SW2	21	22	27	46

[1)] Internal hexagon

DIRECTIONAL FUNCTION

Control cover "HWMA." and **"HWMB."** for set-up of a directional valve: NG50 and 63

01	02	03	04		05	06	07	08	09	10	11	12
LFA			**–**	**7X**	**/**	**450**						**1)**

02	03	08	09	11
Size	**Type**	**P**	**T**	**F**
50	**HWMA1** **HWMA2**	P** ◿	T** ◿	F** ◿
63	**HWMB1** **HWMB2**	P** ◿	T** ◿	F** ◿

◿ Orifice possible, if required, specifications have to be made

1) See "Ordering code for control cover type LFA..." page 13.

For ordering code of orifices, see page 81.

LFA . HWMA... (NG50 and 63)

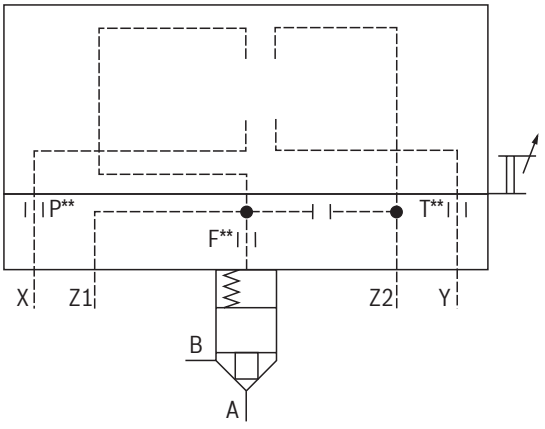

LFA . HWMB... (NG50 and 63)

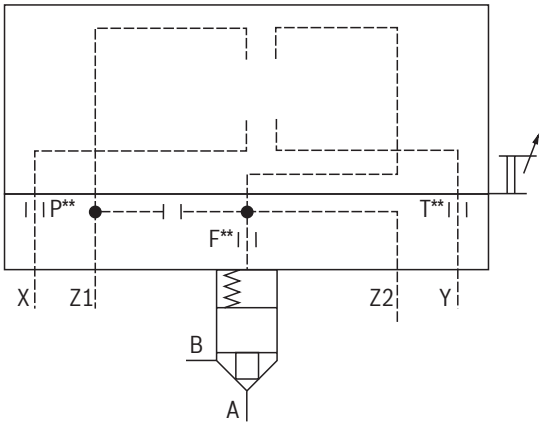

DIRECTIONAL FUNCTION

Control cover "HWMA." and **"HWMB."** for set-up of a directional valve: NG50 and 63 (dimensions in mm)

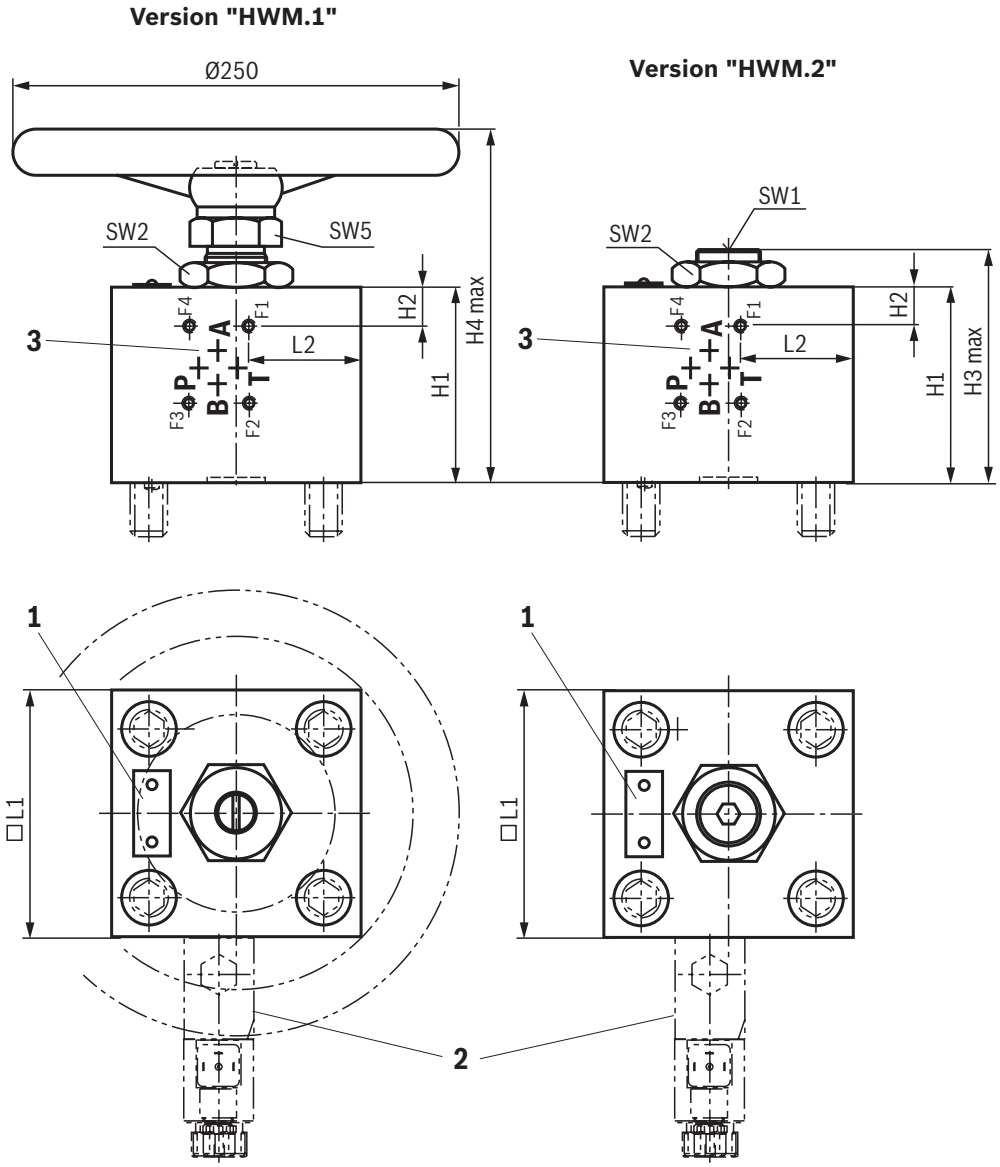

1 Name plate

2 Directional seat valve (pilot control valve)
- ▶ NG40 and 50: Type M-3SEW 6 ...450
- ▶ NG63: Type M-3SEW 10 ...450,
separate order, see page 14

3 Porting pattern according to ISO 4401-03-02-0-05 (NG50) or ISO 4401-05-04-0-05 (NG63)

Mounting screws (see also page 80).

Notice:
The dimensions are nominal dimensions which are subject to tolerances.

NG	50	63
H1	110	125
H2	34.5	18
H3 max	156	175
H4 max	230	250
□ L1	140	180
L2	68	55
SW1 [1)]	17	22
SW2	55	65
SW5	46	55

1) Internal hexagon

DIRECTIONAL FUNCTION

Intermediate cover "D19" for installation kit with increased spring installation space and piston sealing (upon request)

01	02	03		04		05	06	07	08	09	10	11	12
LFA		**D19**	**–**	**7X**	**/**	**450**							**1)**

02

Size					
16	**25**	**32**	**40**	**50**	**63**

1) See "Ordering code for control cover type LFA..." page 13.

LFA . D19...

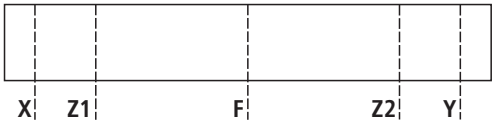

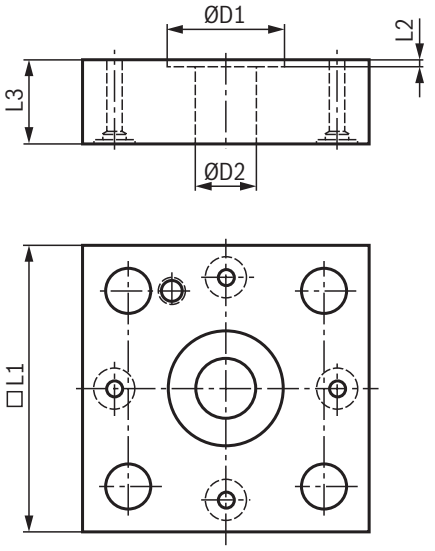

NG	16	25	32	40	50	63
ØD1	24.9	34.5	44.6	71	86	114
ØD2	8.5	18.2	23.3	32	42	50
□ L1	65	85	100	125	140	180
L2	2	2	2.7	2.7	4.3	4.3
L3	25	25	30	30	40	60

Mounting screws: Intermediate cover with control cover (separate order)

NG	Control cover Type LFA	Hexagon socket head cap screws ISO 4762 - 10.9-flZn/nc/480h/C			
		Quantity	Dimension	Material number	Tightening torque M_A in Nm ±5 %
16	D, H.	4	M8 x 65	R913014761	30
	WEM., GWMA20		M8 x 80	R913015803	
	HWM.		M8 x 125	R913000460	
	1)		M8 x 70	R913014548	
25	GWMA20	4	M12 x 115	R913015588	90
	HWM.		M12 x 125	R913015590	
	1)		M12 x 75	R913014791	
32	H.	4	M16 x 110	R913015642	220
	GWMA20		M16 x 120	R913014711	
	HWM.		M16 x 130	R913014713	
	1)		M16 x 90	R913014712	
40	H., HWM.	4	M20 x 140	R913015675	430
	GWMA20		M20 x 130	R913015674	
	1)		M20 x 100	R913015670	
50	H., HWM.	4	M20 x 160	R913015677	430
	1)		M20 x 120	R913015672	
63	D, WEM., GWMA20, KWMA	4	M30 x 160	R913015749	1500
	HWM.		M30 x 210	R913015754	
	1)		M30 x 170	R913015750	

1) More available series control covers

PRESSURE FUNCTION

Function, general

2-way cartridge valves for pressure functions are pilot-operated valves in seat or spool design. The power section designed as cartridge valve (1) is installed into a receiving hole standardized according to ISO 7368 and closed with a control cover (2).
The pilot control valve (4) for manual or electrically proportional pressure adjustment is integrated into the control cover (2) or is installed on the control cover (2).
By combination of cartridge valves with the control covers, different pressure functions can be realized.

Function, section, symbol: Pressure relief function

Control cover type LFA . **DB**...
Cartridge valve type LC. **DB**...
The cartridge valve (1) for the pressure relief function (type LC . DB...) is designed as seat valve without area difference (no effective area at port B). The effective pressure at port A is directed via the pilot oil supply orifice (5) to the spring side (6) of the element. Under the pressure set at the pilot control valve (4), the spool (3) is pressure-compensated and closed by the spring force. On reaching the set pressure, the spool (3) is opened and the pressure at port A is limited according to the pressure-flow characteristics.

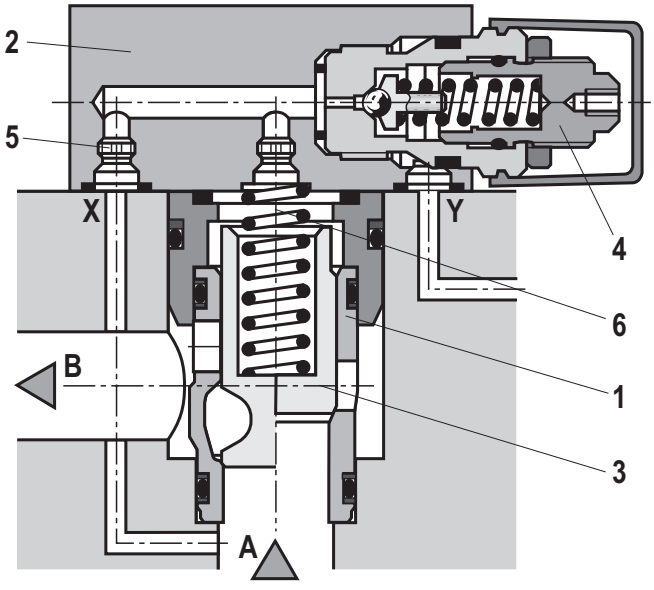

Version "D" | **Version "E"**

(see ordering code on page 51)

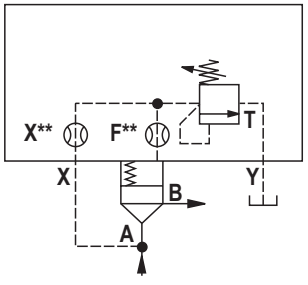

Type LFA . DB...
Type LC . DB...

PRESSURE FUNCTION

Technical data
(For applications outside these values, please consult us!)

general										
Size			16	25	32	40	50	63	80	100
Weight	▶ Type LC	kg	0.25	0.5	1.1	1.9	3.9	7.2	13.0	27.0
	▶ Type LFA	kg	1.2	2.3	4.0	7.4	10.5	21.0	27.0	42.0
Ambient temperature range		°C	–20 ... +80							
$MTTF_D$ values according to EN ISO 13849		Years	150 (for further details see data sheet 08012)							

hydraulic		
Maximum operating pressure (port A and B)	bar	450
Hydraulic fluid		see table below
Hydraulic fluid temperature range	°C	–20 ... +80
Viscosity range	mm^2/s	2.8 ... 500
Maximum admissible degree of contamination of the hydraulic fluid, cleanliness class according to ISO 4406 (c)		Class 20/18/15 [1]

Hydraulic fluid		**Classification**	**Suitable sealing materials**	**Standards**	**Data sheet**
Mineral oils		HL, HLP	H-ECOPUR	DIN 51524	90220
Bio-degradable	▶ Insoluble in water	HETG	H-ECOPUR	ISO 15380	90221
		HEES	H-ECOPUR		
Flame-resistant	▶ Water-free	HFDU (glycol base)	H-ECOPUR	ISO 12922	90222
		HFDU (ester base)	H-ECOPUR		

☞ **Important information on hydraulic fluids:**
- ▶ For further information and data on the use of other hydraulic fluids, please refer to the data sheets above or contact us.
- ▶ There may be limitations regarding the technical valve data (temperature, pressure range, life cycle, maintenance intervals, etc.).
- ▶ **Bio-degradable and flame-resistant:** If this hydraulic fluid is used, small amounts of dissolved zinc may get into the hydraulic system.

[1] The cleanliness classes specified for the components must be adhered to in hydraulic systems. Effective filtration prevents faults and simultaneously increases the life cycle of the components.
For the selection of the filters see www.boschrexroth.com/filter.

PRESSURE FUNCTION

Pressure relief function – ordering code: Cartridge valve (without control cover)

01	02	03	04	05	06		07	08
LC		**DB**				**/**	**450**	**P**

01	Cartridge valve	**LC**
02	Size 16	**16**
	Size 25	**25**
	Size 32	**32**
	Size 40	**40**
	Size 50	**50**
	Size 63	**63**
	Size 80	**80**
	Size 100	**100**
03	Pressure relief function	**DB**
04	Cracking pressure 0 bar (without spring)	**00**
	Cracking pressure ca. 2 bar	**20**
	Cracking pressure ca. 4 bar	**40**
	Cracking pressure approx. 5bar (NG16, 25 and 32 only)	**50**
	Cracking pressure ca. 8 bar	**80**
05	Seat spool **without** orifice (standard)	**E**
	Seat spool **with** orifice (orifice Ø see table below)	**A**
	Seat/sliding spool **without** orifice (standard)	**D**
	Seat/sliding spool **with** orifice (orifice Ø see table below)	**B**
06	Component series 70 ... 79 (70 ... 79: unchanged installation and connection dimensions) (NG16 ... 63)	**7X**
	Component series 60 ... 69 (60 ... 69: unchanged installation and connection dimensions) (NG80 and 100)	**6X**
07	High-pressure series	**450**

Seal material

08	H-ECOPUR	**P**
	Observe compatibility of seals with hydraulic fluid used. (Other seals upon request)	

Size	**Orifice Ø** in mm	**Size**	**Orifice Ø** in mm
16	0.7	50	1.2 [1] / 1.5 [2]
25	0.8	63	1.8
32, 40	1.0	80, 100	2.8

[1] Seat spool
[2] Seat/sliding spool

Pressure relief function – Symbols

Version "E"	Version "A"	Version "D"	Version "B"
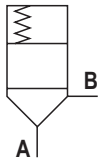	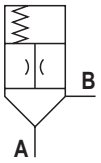	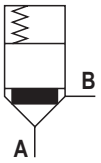	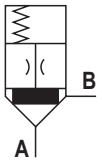

PRESSURE FUNCTION

Pressure relief function – Characteristic curves: Size 16
(measured with HLP46, ϑ_{Oil} = 40 ±5 °C)

Manual pressure adjustment (type LFA 16 **DB**... and type LFA 16 **DBS**...)

Version "E"

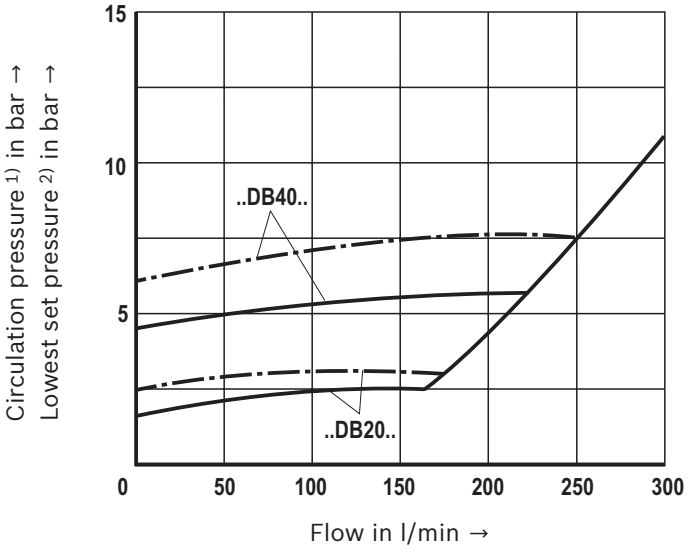

Version "D"

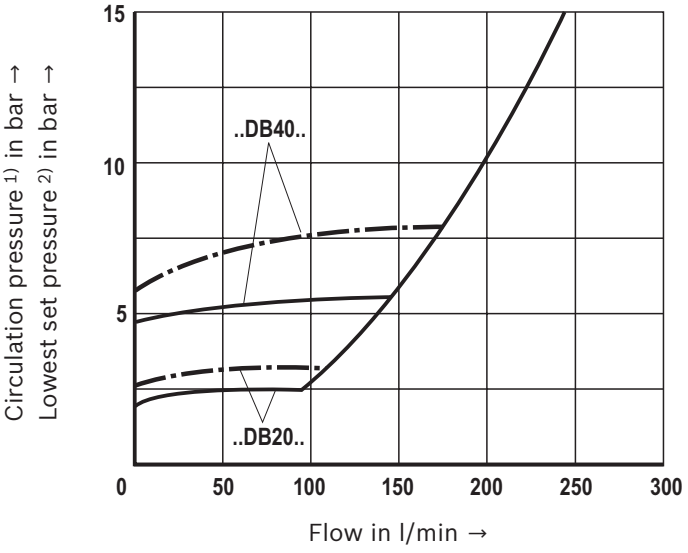

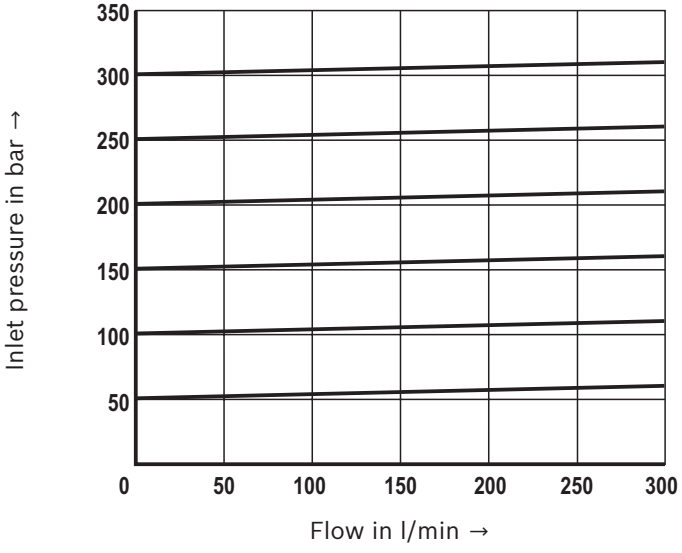

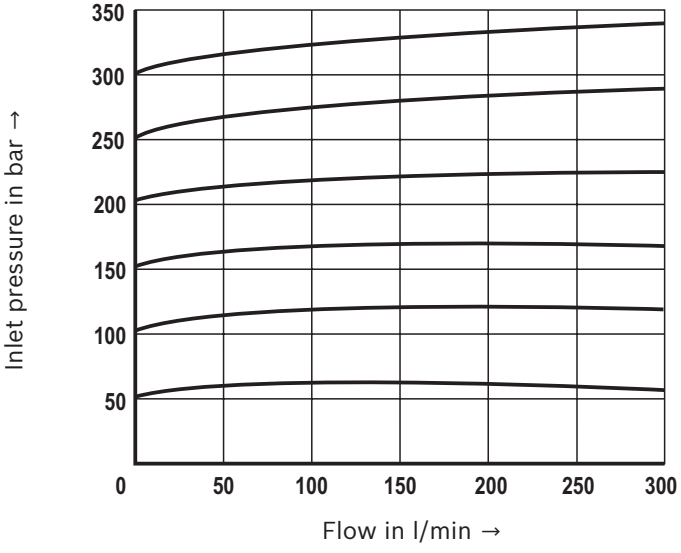

1) – – – Circulation pressure in bar
2) ——— Lowest set pressure in bar

☞ **Notes:**
The characteristic curves were measured with **external, depressurized pilot oil return**.
Due to the internal pilot oil return, the inlet pressure increases by the output pressure present in port B.

PRESSURE FUNCTION

Pressure relief function – Characteristic curves: Size 16
(measured with HLP46, ϑ_{Oil} = 40 ±5 °C)

Electrically proportional pressure adjustment (type LFA 16 **DBEM...**)

Version "E"

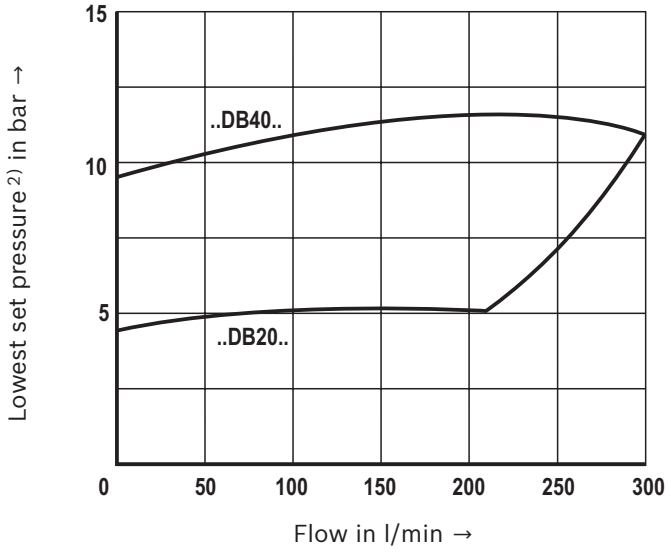

Version "D"

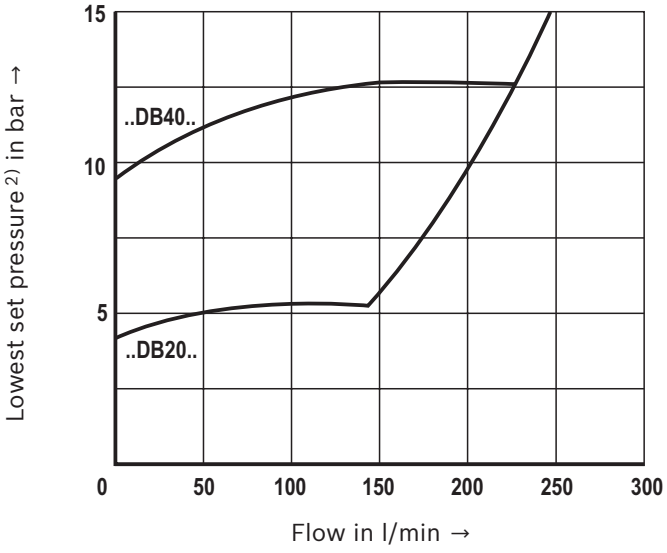

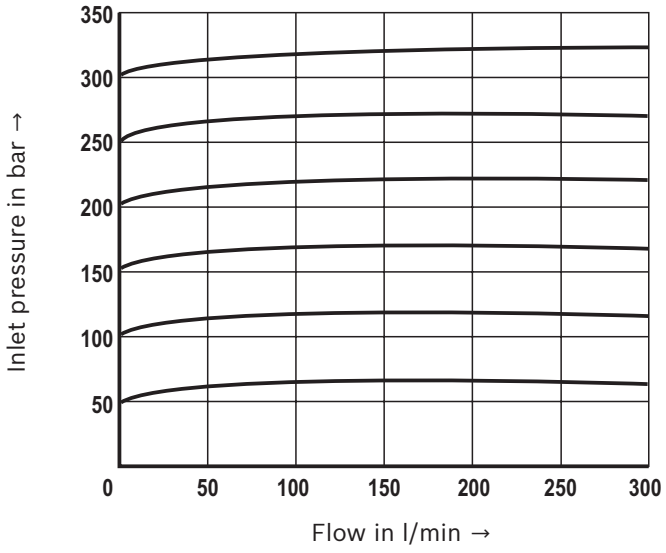

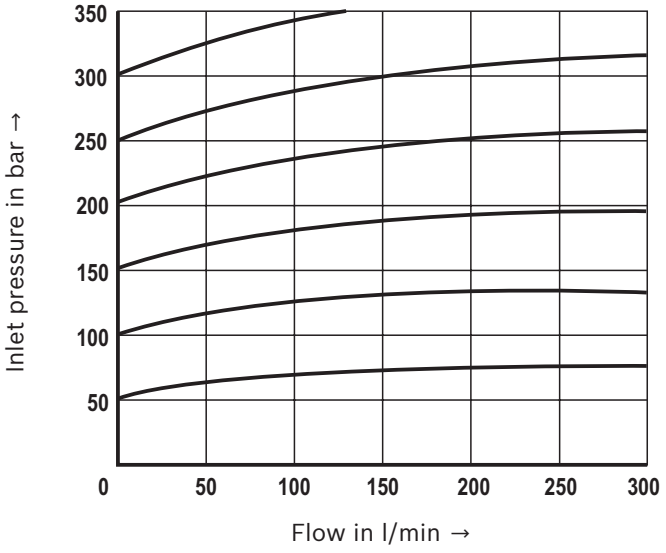

☞ **Notes:**
The characteristic curves were measured with **external, depressurized pilot oil return**.
Due to the internal pilot oil return, the inlet pressure increases by the output pressure present in port B.

PRESSURE FUNCTION

Pressure relief function – Characteristic curves: Size 25
(measured with HLP46, ϑ_{Oil} = 40 ±5 °C)

Manual pressure adjustment (type LFA 25 **DB**... and type LFA 25 **DBS**...)

Version "E"

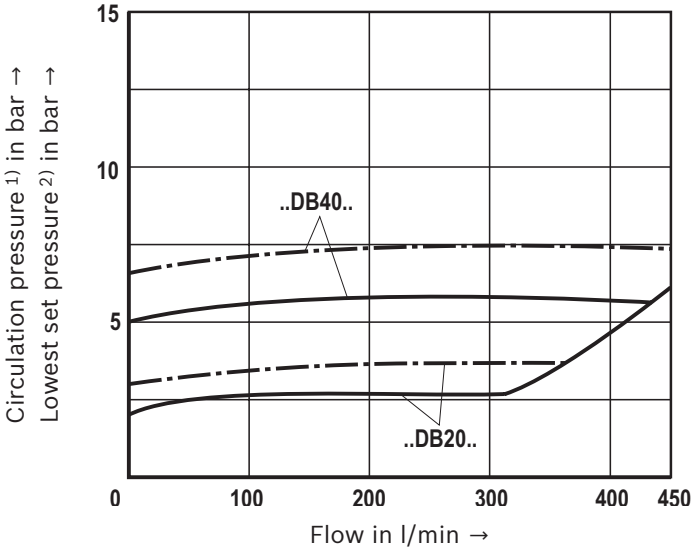

Version "D"

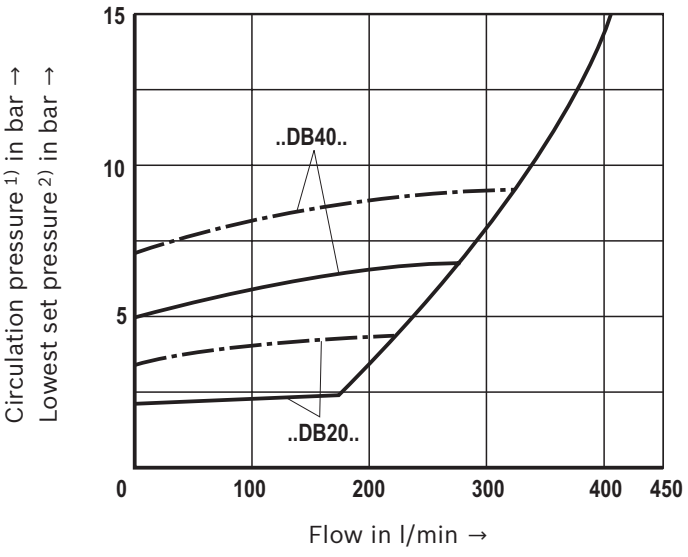

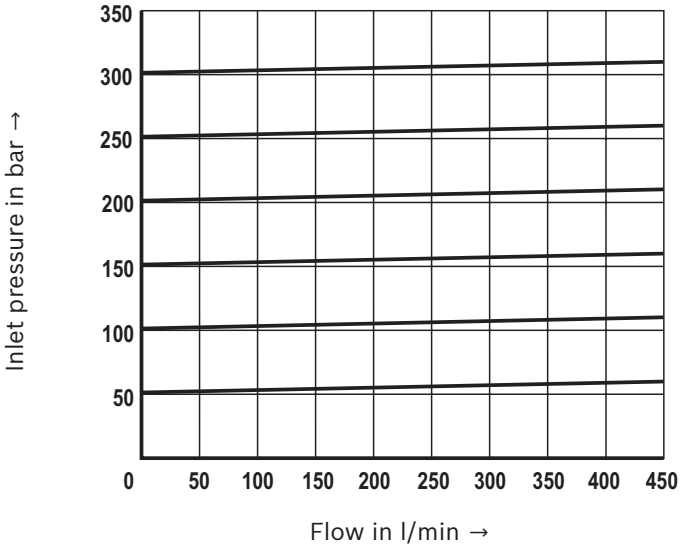

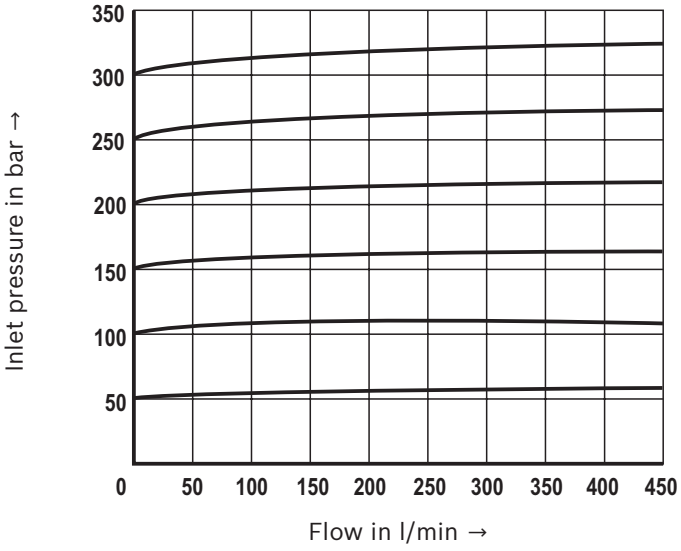

1) Circulation pressure in bar
2) Lowest set pressure in bar

☞ **Notes:**
The characteristic curves were measured with **external, depressurized pilot oil return**.
Due to the internal pilot oil return, the inlet pressure increases by the output pressure present in port B.

PRESSURE FUNCTION

Pressure relief function – Characteristic curves: Size 25
(measured with HLP46, ϑ_{Oil} = 40 ±5 °C)

Electrically proportional pressure adjustment (type LFA 25 **DBEM...**)

Version "E"

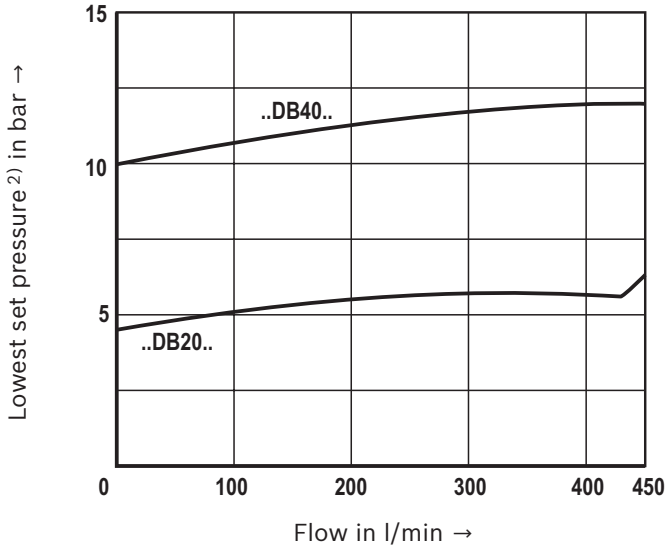

Version "D"

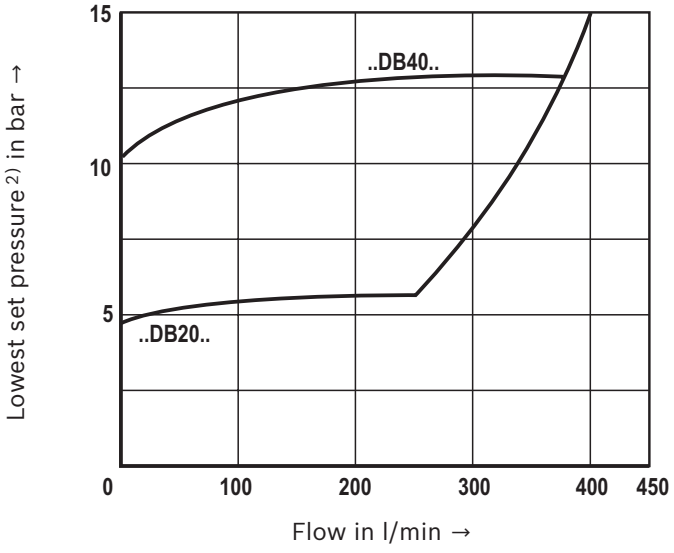

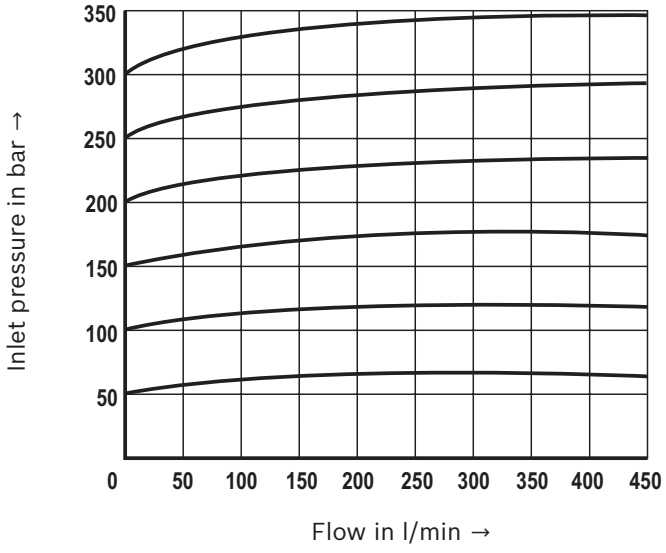

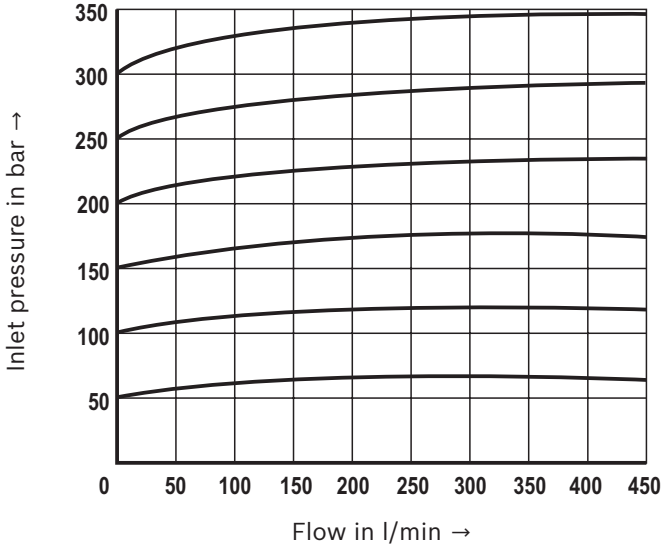

☞ **Notes:**
The characteristic curves were measured with **external, depressurized pilot oil return**.
Due to the internal pilot oil return, the inlet pressure increases by the output pressure present in port B.

PRESSURE FUNCTION

Pressure relief function – Characteristic curves: Size 32
(measured with HLP46, ϑ_{Oil} = 40 ±5 °C)

Manual pressure adjustment (type LFA 32 **DB**... and type LFA 32 **DBS**...)

Version "E"

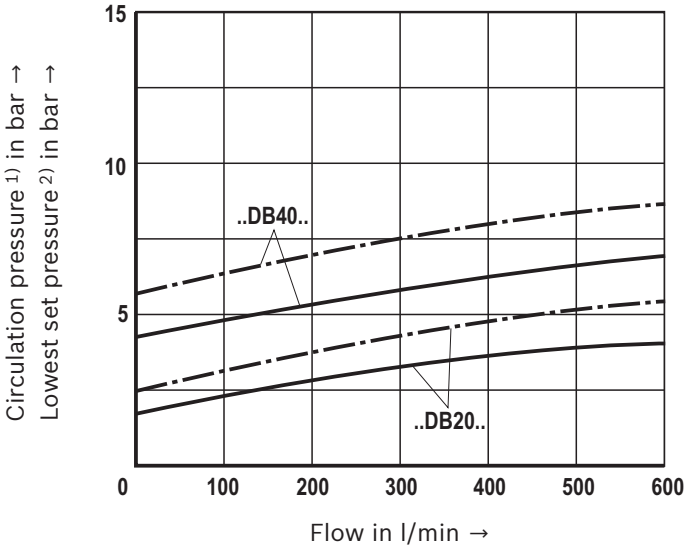

Version "D"

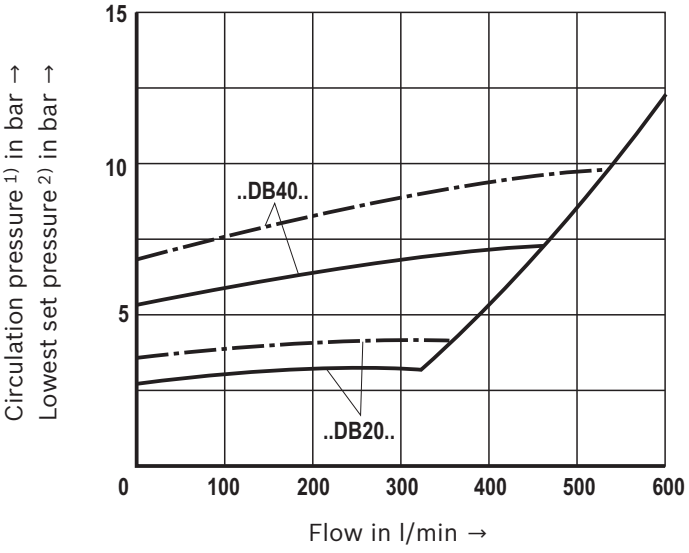

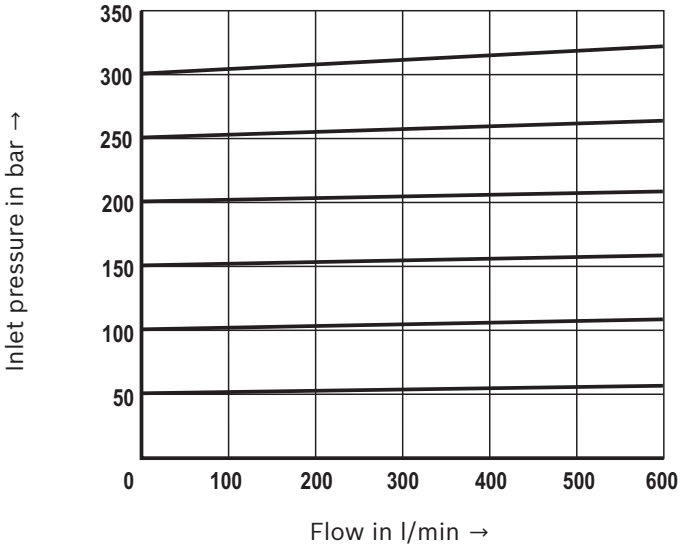

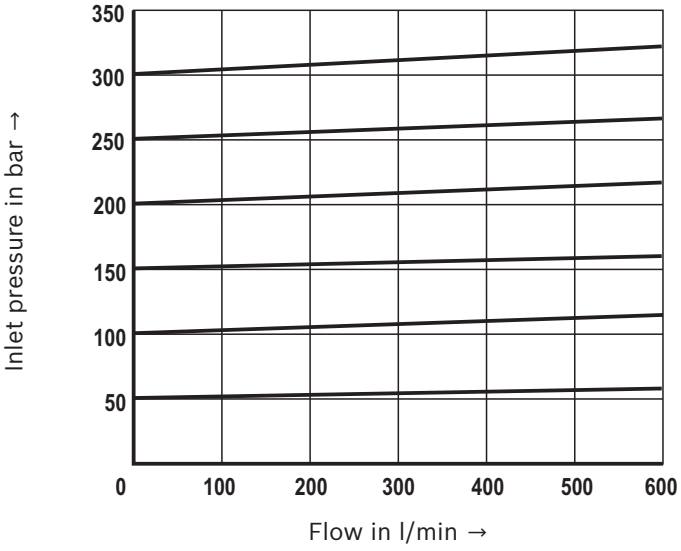

1) Circulation pressure in bar
2) Lowest set pressure in bar

☞ **Notes:**
The characteristic curves were measured with **external, depressurized pilot oil return**.
Due to the internal pilot oil return, the inlet pressure increases by the output pressure present in port B.

PRESSURE FUNCTION

Pressure relief function – Characteristic curves: Size 32
(measured with HLP46, ϑ_{Oil} = 40 ±5 °C)

Electrically proportional pressure adjustment (type LFA 32 **DBEM**...)

Version "E"

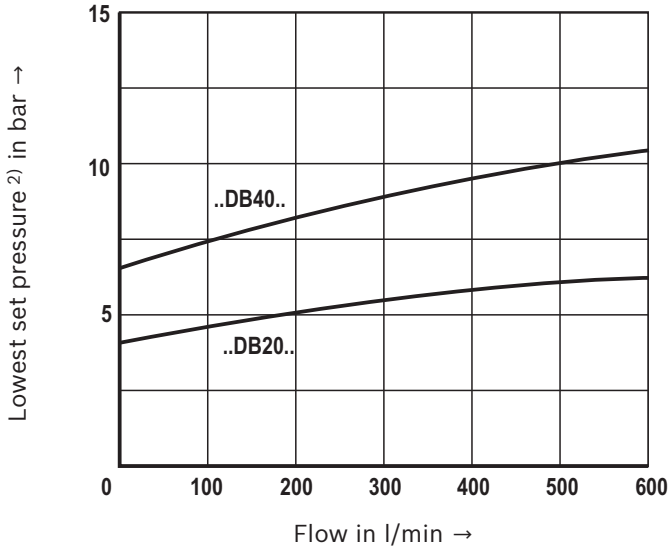

Version "D"

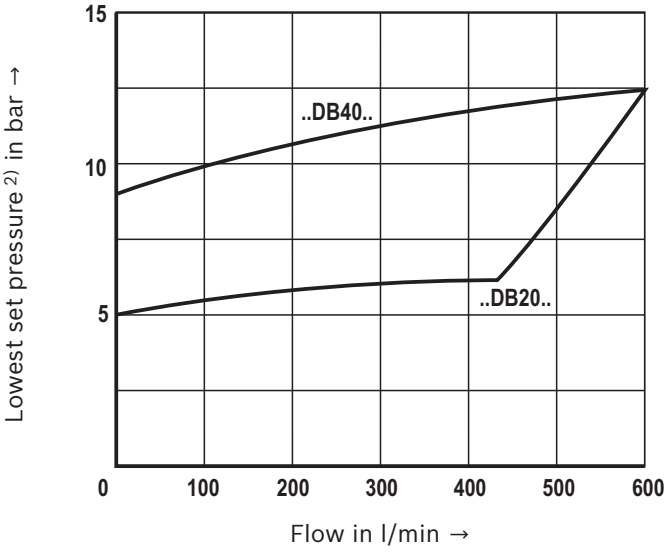

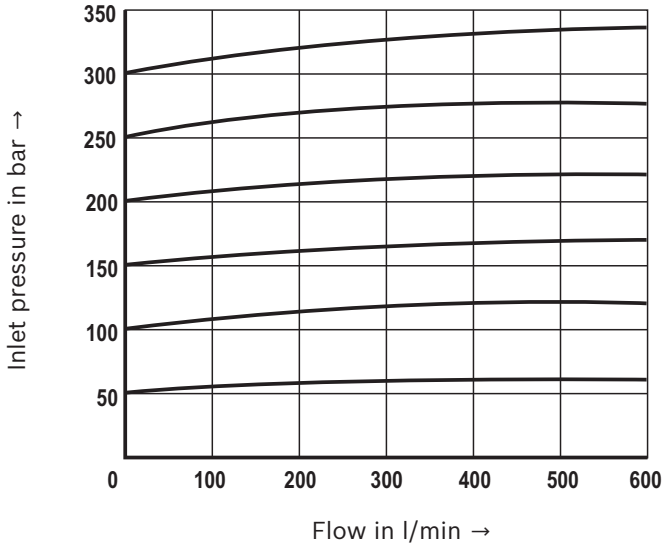

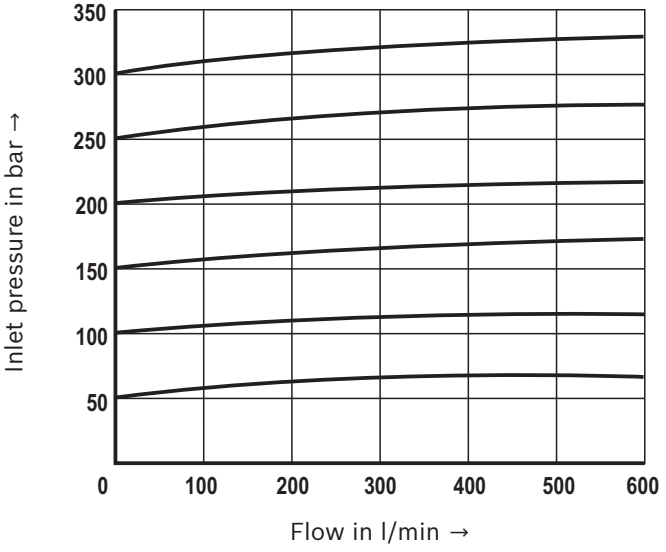

☞ **Notes:**
The characteristic curves were measured with **external, depressurized pilot oil return**.
Due to the internal pilot oil return, the inlet pressure increases by the output pressure present in port B.

PRESSURE FUNCTION

Pressure relief function – Characteristic curves: Size 40
(measured with HLP46, ϑ_{Oil} = 40 ±5 °C)

Manual pressure adjustment (type LFA 40 **DB**... and type LFA 40 **DBS**...)

Version "E"

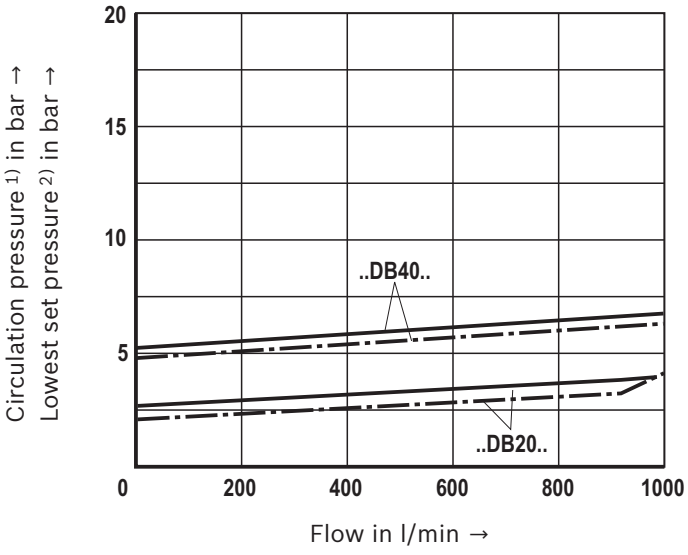

Version "D"

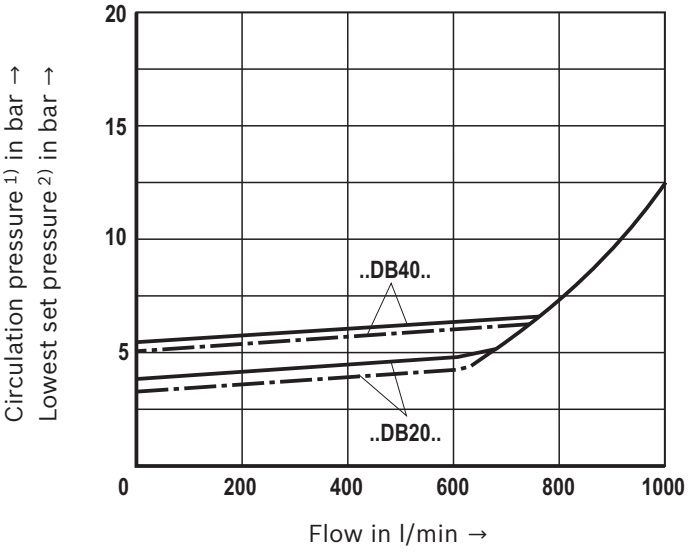

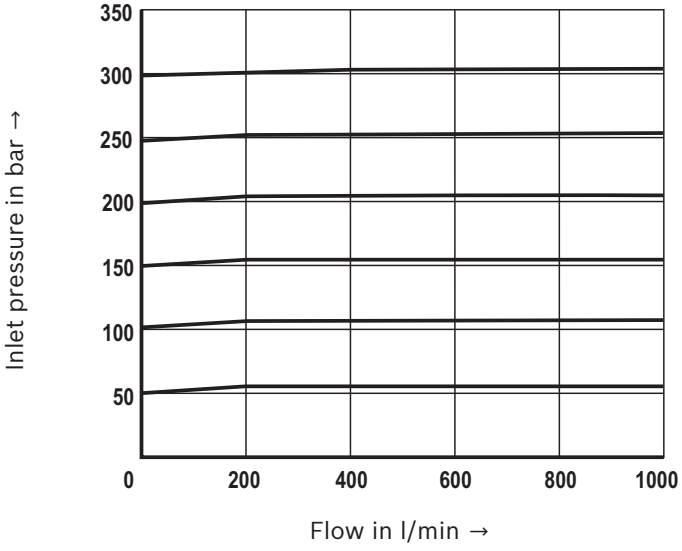

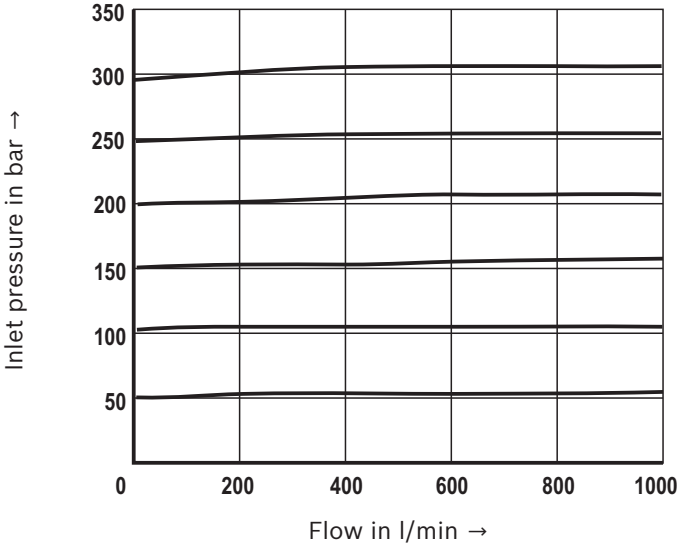

1) Circulation pressure in bar
2) Lowest set pressure in bar

☞ **Notes:**
The characteristic curves were measured with **external, depressurized pilot oil return**.
Due to the internal pilot oil return, the inlet pressure increases by the output pressure present in port B.

PRESSURE FUNCTION

Pressure relief function – Characteristic curves: Size 40
(measured with HLP46, ϑ_{Oil} = 40 ±5 °C)

Electrically proportional pressure adjustment (type LFA 40 **DBEM**...)

Version "E"

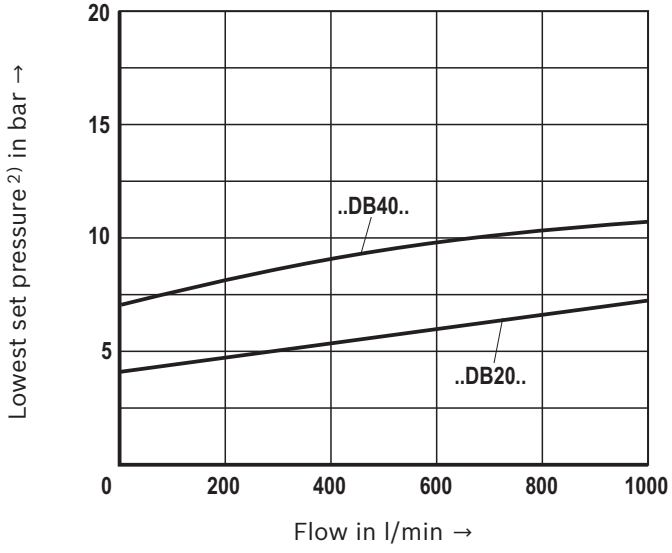

Version "D"

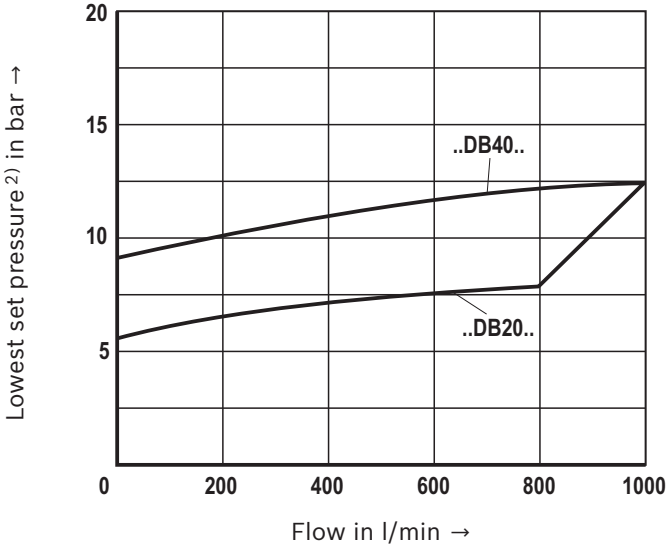

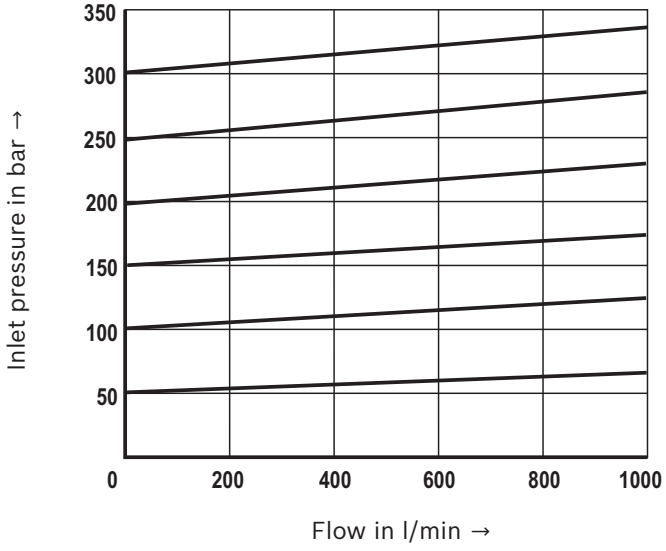

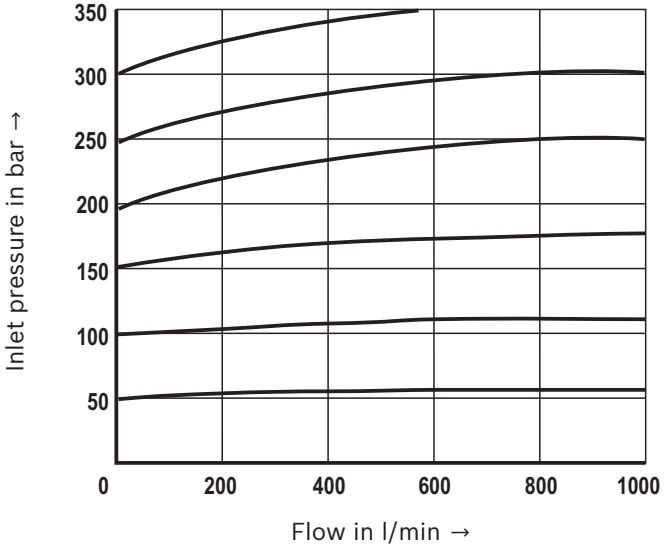

☞ **Notes:**
The characteristic curves were measured with **external, depressurized pilot oil return**.
Due to the internal pilot oil return, the inlet pressure increases by the output pressure present in port B.

PRESSURE FUNCTION

Pressure relief function – Characteristic curves: Size 50
(measured with HLP46, ϑ_{Oil} = 40 ±5 °C)

Manual pressure adjustment (type LFA 50 **DB**... and type LFA 50 **DBS**...)

Version "E"

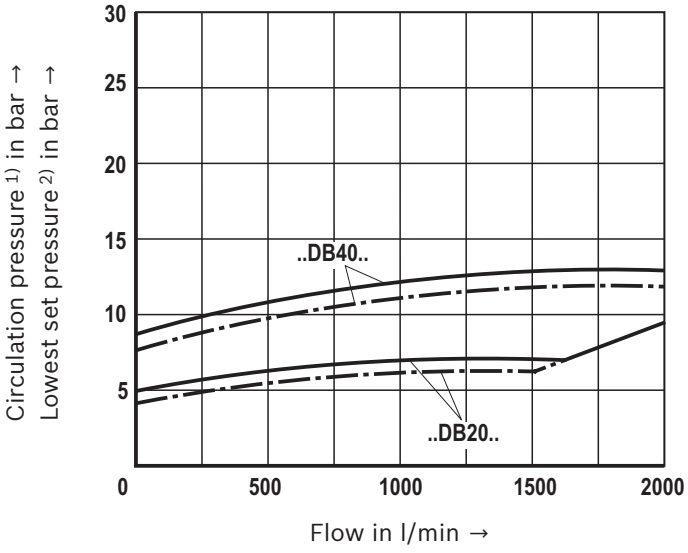

Version "D"

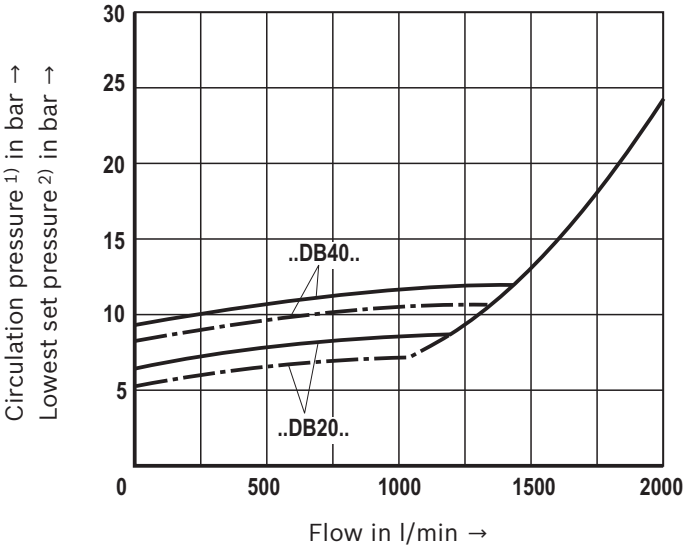

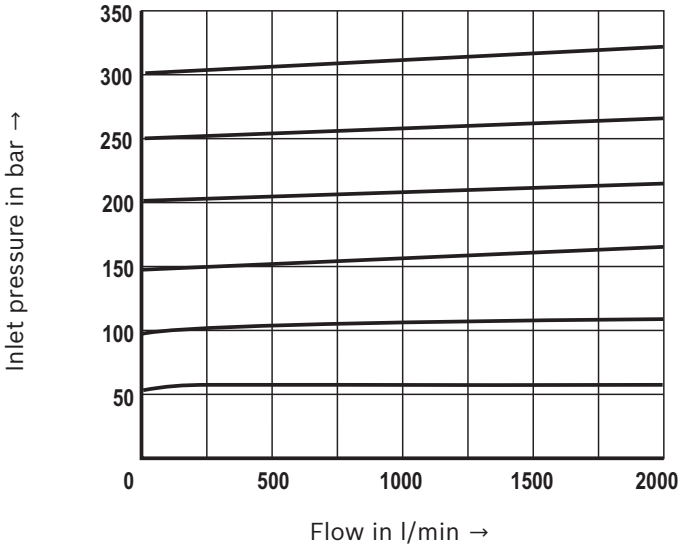

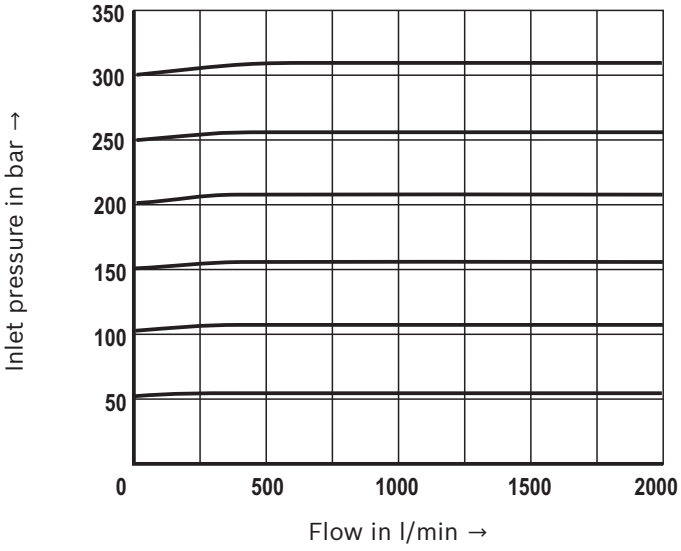

1) Circulation pressure in bar
2) Lowest set pressure in bar

☞ **Notes:**
The characteristic curves were measured with **external, depressurized pilot oil return**.
Due to the internal pilot oil return, the inlet pressure increases by the output pressure present in port B.

PRESSURE FUNCTION

Pressure relief function – Characteristic curves: Size 50
(measured with HLP46, ϑ_{Oil} = 40 ±5 °C)

Electrically proportional pressure adjustment (type LFA 50 **DBEM**...)

Version "E"

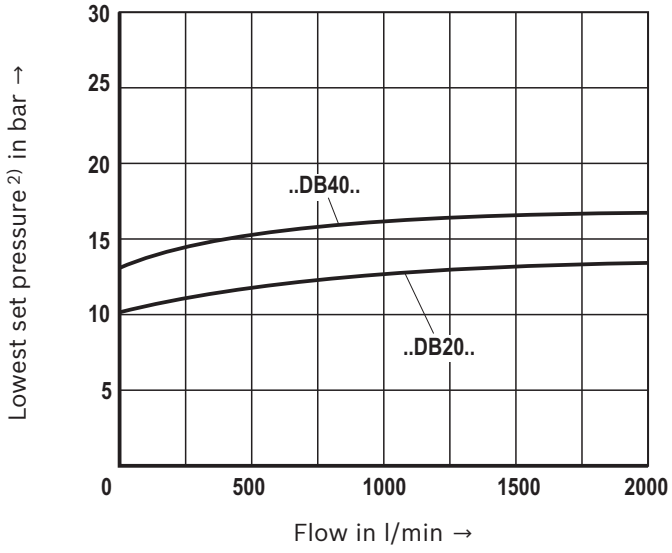

Version "D"

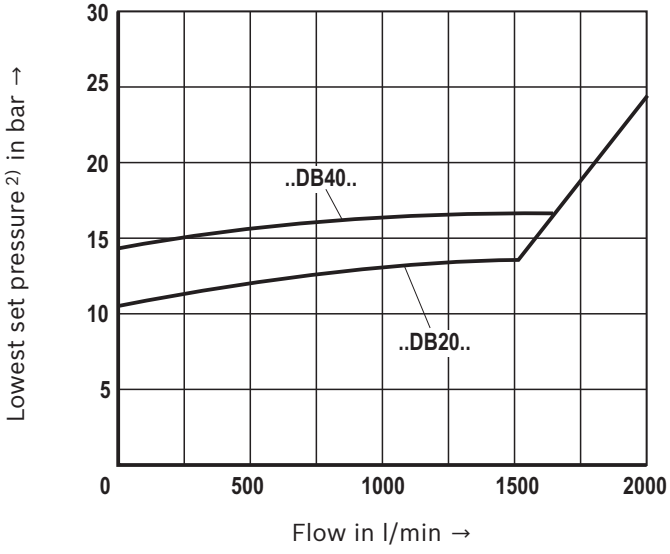

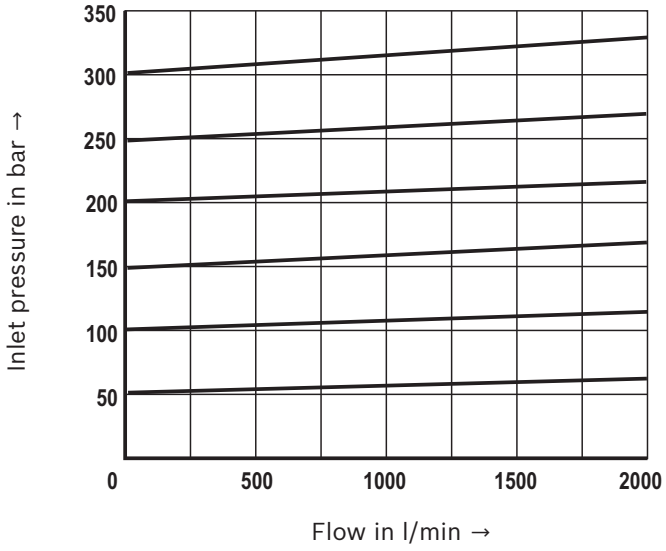

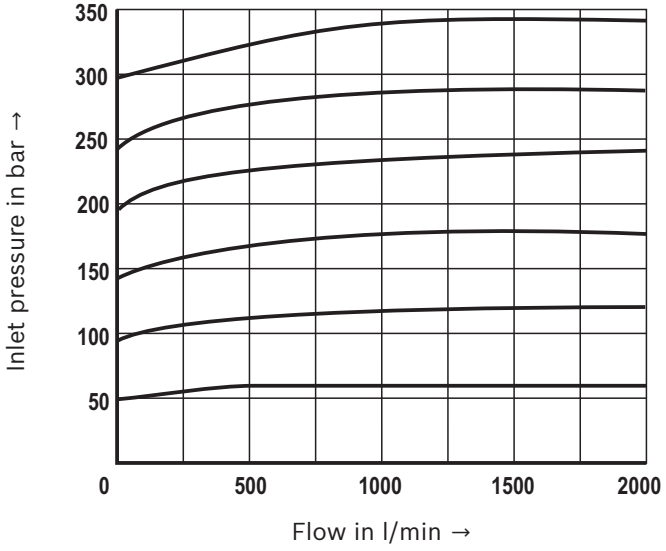

☞ **Notes:**
The characteristic curves were measured with **external, depressurized pilot oil return**.
Due to the internal pilot oil return, the inlet pressure increases by the output pressure present in port B.

PRESSURE FUNCTION

Pressure relief function – Characteristic curves: Size 63
(measured with HLP46, ϑ_{Oil} = 40 ±5 °C)

Manual pressure adjustment (type LFA 63 **DB**... and type LFA 63 **DBS**...)

Version "E"

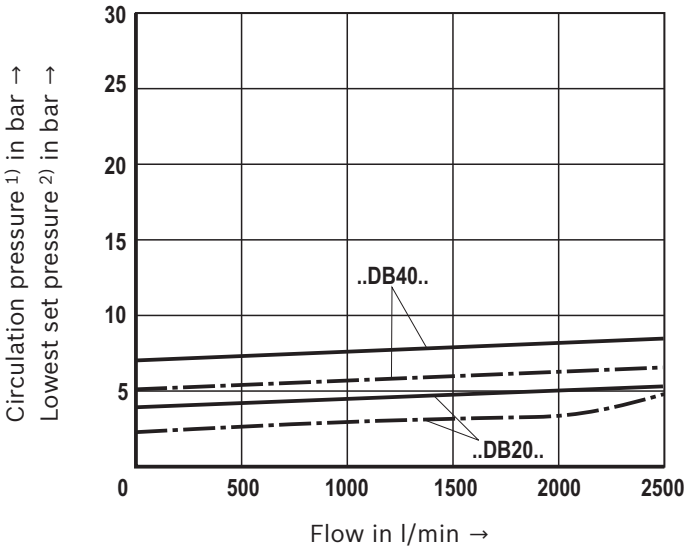

Version "D"

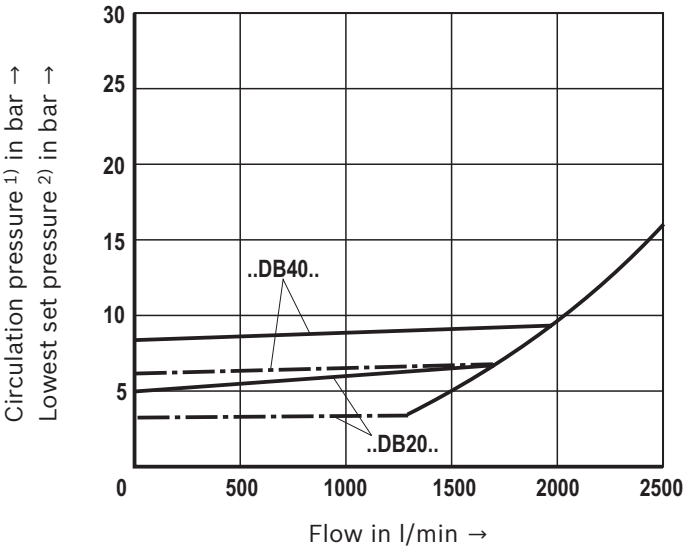

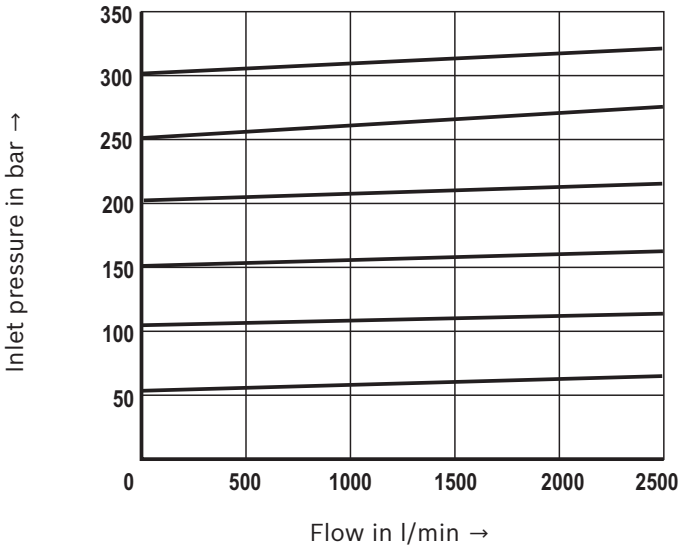

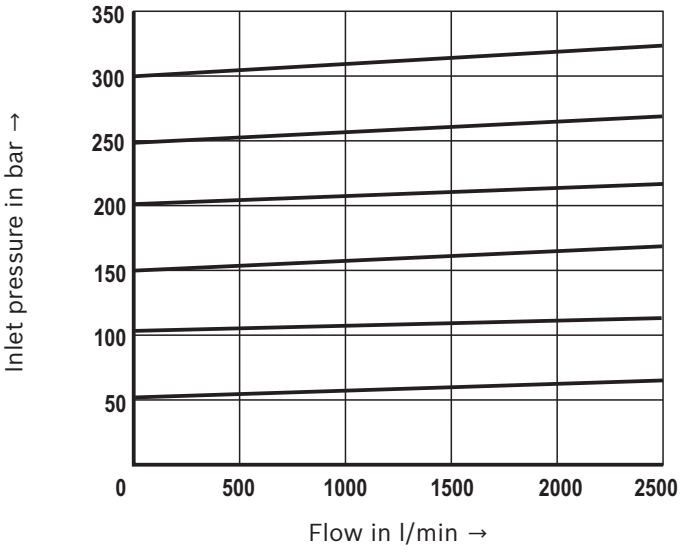

1) Circulation pressure in bar
2) Lowest set pressure in bar

☞ **Notes:**
The characteristic curves were measured with **external, depressurized pilot oil return**.
Due to the internal pilot oil return, the inlet pressure increases by the output pressure present in port B.

PRESSURE FUNCTION

Pressure relief function – General information on the **ordering code** for control covers type LFA...

01	02	03	04		05		06	07	08	09	10	11	12	13	14	15	16
LFA				**–**		**/**	**450**			**P**							

01	Control cover	**LFA**

02	Size 16	**16**
	Size 25	**25**
	Size 32	**32**
	Size 40	**40**
	Size 50	**50**
	Size 63	**63**
	Size 80	**80**
	Size 100	**100**

Types

03	Manual pressure adjustment	**DB**
	Electrically proportional pressure adjustment, with maximum pressure limitation	**DBEM**
	Manual pressure adjustment, for electric unloading circuit	**DBS**

Adjustment types of the pressure relief valves

04	Rotary knob	**1**
	Hexagon with protective cap / internal hexagon	**2**

05	Component series 70 ... 79 (70 ... 79: unchanged installation and connection dimensions) (NG16 ... 63)	**7X**
	Component series 60 ... 69 (60 ... 69: unchanged installation and connection dimensions) (NG80 and 100)	**6X**

06	High-pressure series	**450**

Adjustment of the pressure relief valves

07	No pressure rating set	**no code**
	Pressure relief valve set to pressure rating	**–**
	Type-examination tested safety valve according to Pressure Equipment Directive 2014/68/EU installed	**E**
	Pressure relief valve set to pressure rating and sealed	**P**

Set pressure / response pressure (information not applicable to version "no code" in item 07)

08	Dependent on size and operating pressure of the pilot control valves. For detailed information, refer to page 65 ... 79.

Seal material

09	H-ECOPUR	**P**
	Observe compatibility of seals with hydraulic fluid used. (Other seals upon request)	

Orifices

10 ... 16	For more detailed information, please refer to the pages of the individual control cover variants and to page 81 (orifice characteristic curves).	

☞ **Notes:**

- The control covers are equipped with standard orifice fitting – optimized in the test area. Orifice specification in the type key is not necessary. Deviating operating conditions may require respective adjustment of the orifice size. The orifices are designed as screw-type orifices. Orifice representation in symbol: 
- With type-examination tested and sealed safety valves with adjustment type "1", pressures below the sealed maximum pressure can be set retroactively without destroying the sealing.

PRESSURE FUNCTION

Pressure relief function – General information on the **ordering code** for control covers type LFA...: Pilot control valves, maximum operating pressure

Pilot control valve (separate order)

Control cover		Pilot control valve		
Size	**Version**	**Size**	**Description**	**Data sheet**
16 ... 63	DBS	6	Directional seat valve, direct operated (subplate mounting), type SEW...450	22058
80, 100		10	Directional seat valve, direct operated (subplate mounting), type SEW...450	22075
16 ... 50	DBEM	6	Proportional pressure relief valve, direct operated, type DBETA	29262

☞ **Notes:**
- By combination of a 2-way cartridge valve with a pilot control valve, various valve functions can be realized. Possible pilot control valves according to ISO 4401 see selection table above.
- Version "450" (Maximum operating pressure 450 bar) is not described in the data sheets specified in the selection table above, it is, however, available. Please enter "450" instead of "420" in the ordering code.
- Observe the maximum operating pressures of the pilot control valves. Static pressure at port T deviating from the maximum operating pressure. For further information refer to the corresponding data sheets.
- Mounting screws for pilot control valves are not included in the scope of delivery.

Pressure relief function – Symbols

Version "DB" (NG16 ... 100)
with manual pressure adjustment

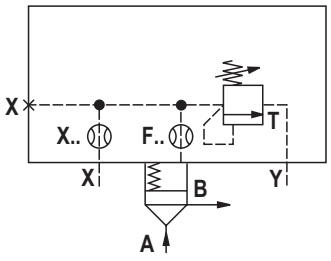

See from page 65

Version "DBEM" (NG16 ... 50)
with electrically proportional pressure adjustment, with maximum pressure limitation

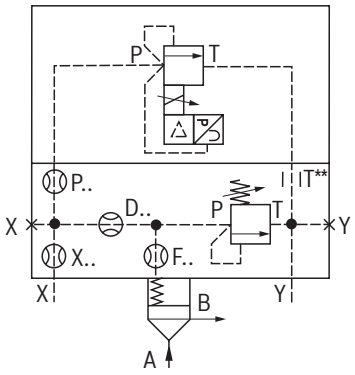

See from page 70

Version "DBS" (NG16 ... 100)
with manual pressure adjustment, for electric unloading circuit

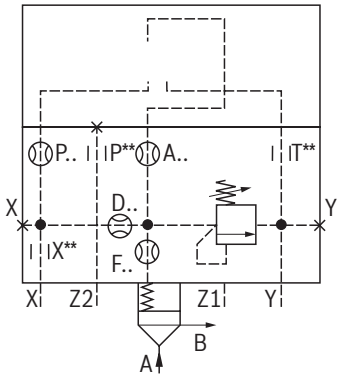

See from page 74

PRESSURE FUNCTION

Pressure relief function – Control cover "DB" with manual pressure adjustment

01	02	03	04		05		06	07	08	09	10	11	12	13	14	15	16
LFA		**DB**		**–**		**/**	**450**			**P**							

01	Control cover	**LFA**

02	Size 16	**16**
	Size 25	**25**
	Size 32	**32**
	Size 40	**40**
	Size 50	**50**
	Size 63	**63**
	Size 80	**80**
	Size 100	**100**

Type

03	Manual pressure adjustment	**DB**

Adjustment types of the pressure relief valves

04	Rotary knob	**1**
	Hexagon with protective cap / internal hexagon	**2**

05	Component series 70 ... 79 (70 ... 79: unchanged installation and connection dimensions) (NG16 ... 63)	**7X**
	Component series 60 ... 69 (60 ... 69: unchanged installation and connection dimensions) (NG80 and 100)	**6X**

06	High-pressure series	**450**

Adjustment of the pressure relief valves

07	No pressure rating set	**no code**
	Pressure relief valve set to pressure rating	**–**
	Type-examination tested safety valve according to Pressure Equipment Directive 2014/68/EU installed	**E**
	Pressure relief valve set to pressure rating and sealed	**P**

Set pressure / response pressure (information not applicable to version "no code" in item 07)

08	410 bar	**410**
	420 bar	**420**
	430 bar	**430**
	440 bar	**440**
	450 bar	**450**

Seal material

09	H-ECOPUR	**P**
	Observe compatibility of seals with hydraulic fluid used. (Other seals upon request)	

Orifices

10 ... 16	Orifice fitting deviating from the standard version in X (NG16 and 25), F and D (Example: X20 → orifice Ø2 mm in channel X)	

PRESSURE FUNCTION

Pressure relief function – Control cover "DB" with manual pressure adjustment:
NG16 ... 32 (dimensions in mm)

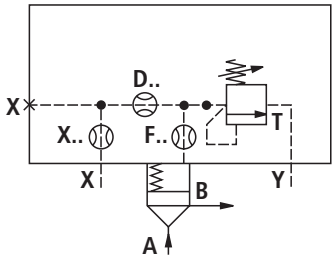

D.. With NG32
X.. With NG16 and 25

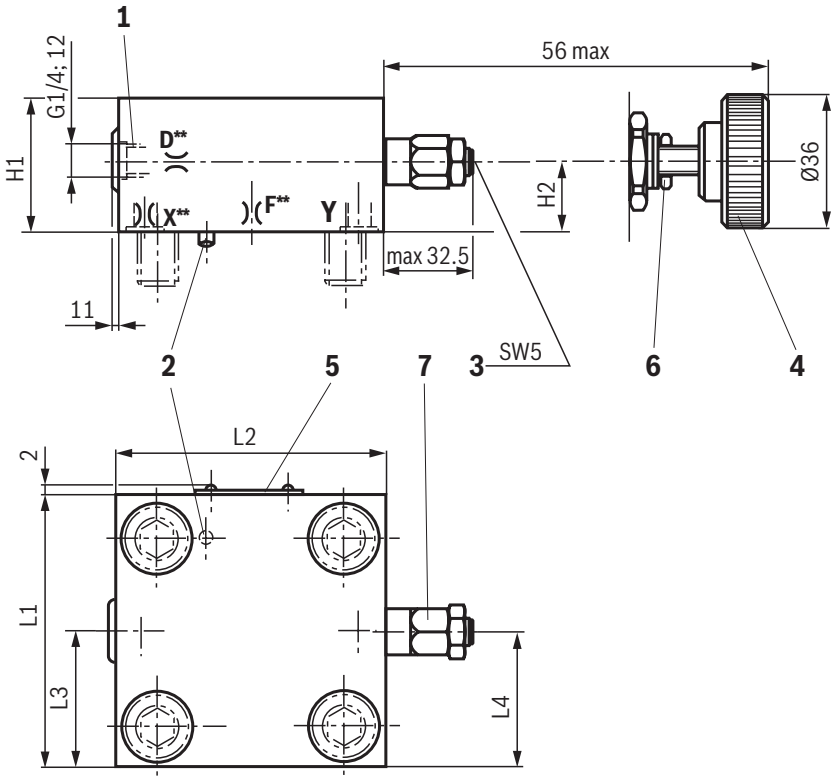

1 Port X (external) as threaded port
2 Locating pin
3 Adjustment type "2"
4 Adjustment type "1"
5 Name plate
6 Lock nut SW17
7 Pressure relief valve type DBD.4K..., data sheet 25710

NG	16	25	32
X**	0.8	0.8	–
F**	1.0	1.0	1.2
D**	–	–	0.8
H1	40	40	50
H2	20	20	26
L1	65	85	100
L2	80	85	100
L3	32.5	42.5	50
L4	32.5	42.5	50

** Orifice Ø

Mounting screws (see also page 80).

☞ **Notice:**
The dimensions are nominal dimensions which are subject to tolerances.

PRESSURE FUNCTION

Pressure relief function – Control cover "DB" with manual pressure adjustment:
NG40 and 50 (dimensions in mm)

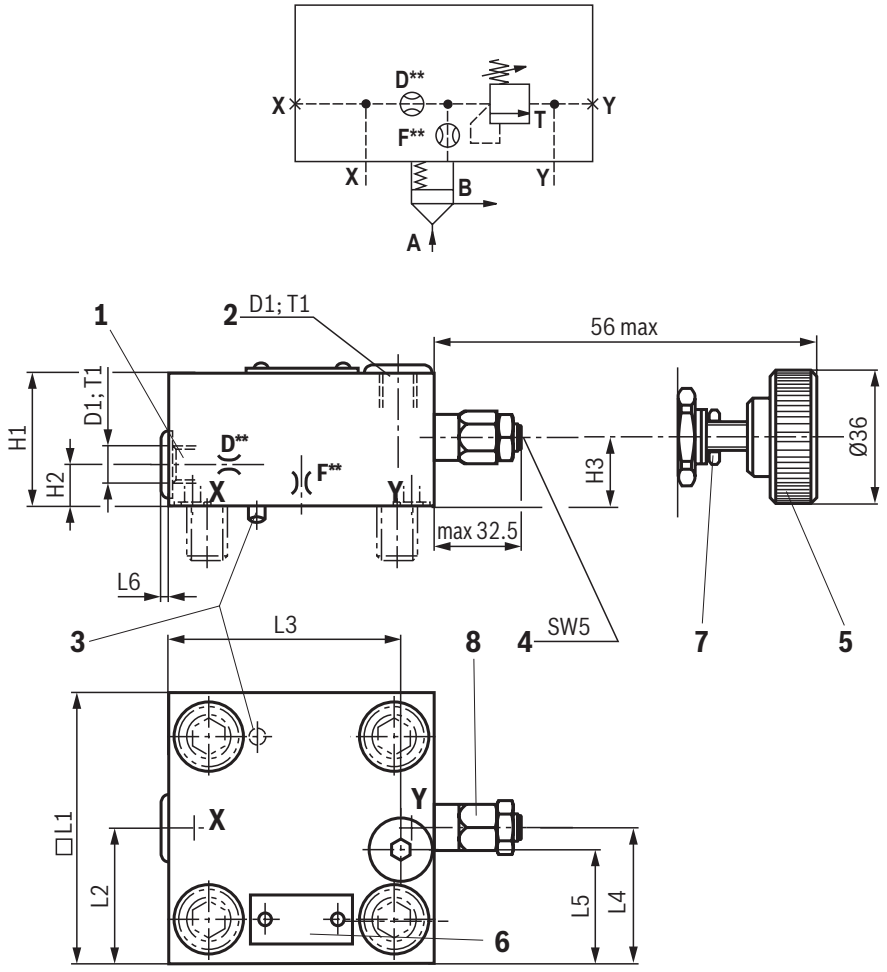

1 Port X (external) as threaded port
2 Port Y (external) as threaded port
3 Locating pin
4 Adjustment type "2"
5 Adjustment type "1"
6 Name plate
7 Lock nut
8 Pressure relief valve type DBD.4K..., data sheet 25710

NG	40	50
F**	1.2	1.5
D**	1.0	2.0
D1	G1/4	G1/2
H1	60	68
H2	23	30
H3	22	20
□L1	125	140
L2	62.5	70
L3	109.5	125
L4	62.5	72.5
L5	62.5	70
L6	11	16
T1	12	14

** Orifice Ø

Mounting screws (see also page 80).

Notice:
The dimensions are nominal dimensions which are subject to tolerances.

PRESSURE FUNCTION

Pressure relief function – Control cover "DB" with manual pressure adjustment:
NG63 (dimensions in mm)

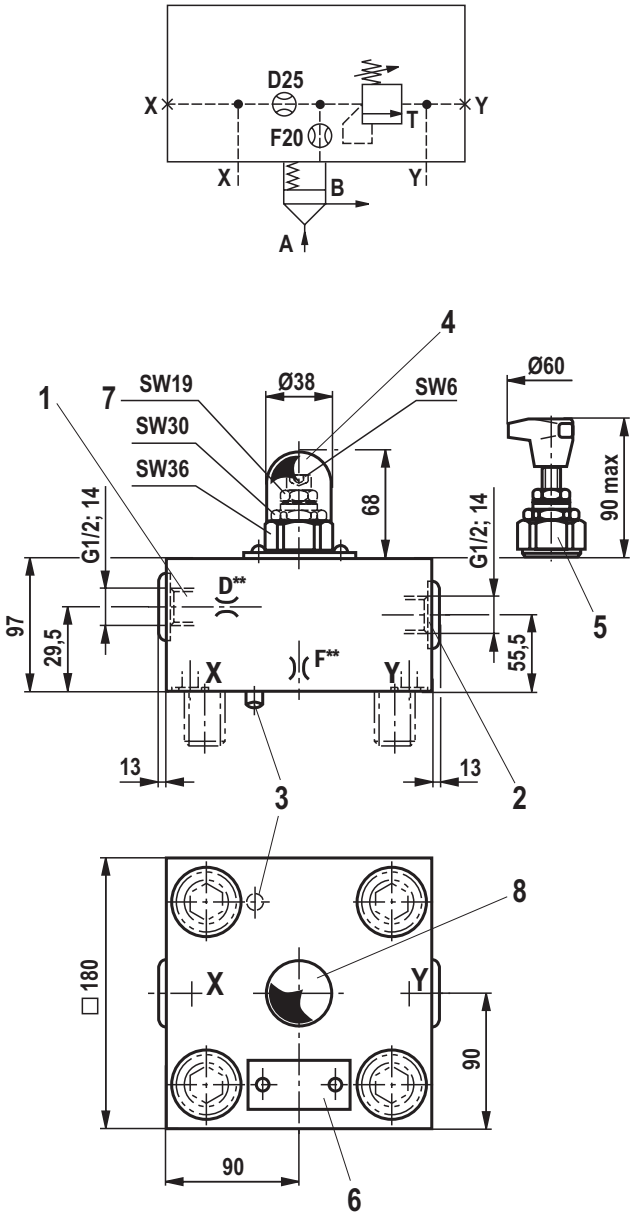

1 Port X (external) as threaded port
2 Port Y (external) as threaded port
3 Locating pin
4 Adjustment type "2"
5 Adjustment type "1"
6 Name plate
7 Lock nut
8 Pressure relief valve type DBD.10K..., data sheet 25402

NG	63
F**	2.0
D**	2.5

** Orifice Ø

Mounting screws (see also page 80).

Notice:
The dimensions are nominal dimensions which are subject to tolerances.

PRESSURE FUNCTION

Pressure relief function – Control cover "DB" with manual pressure adjustment:
NG80 and 100 (dimensions in mm)

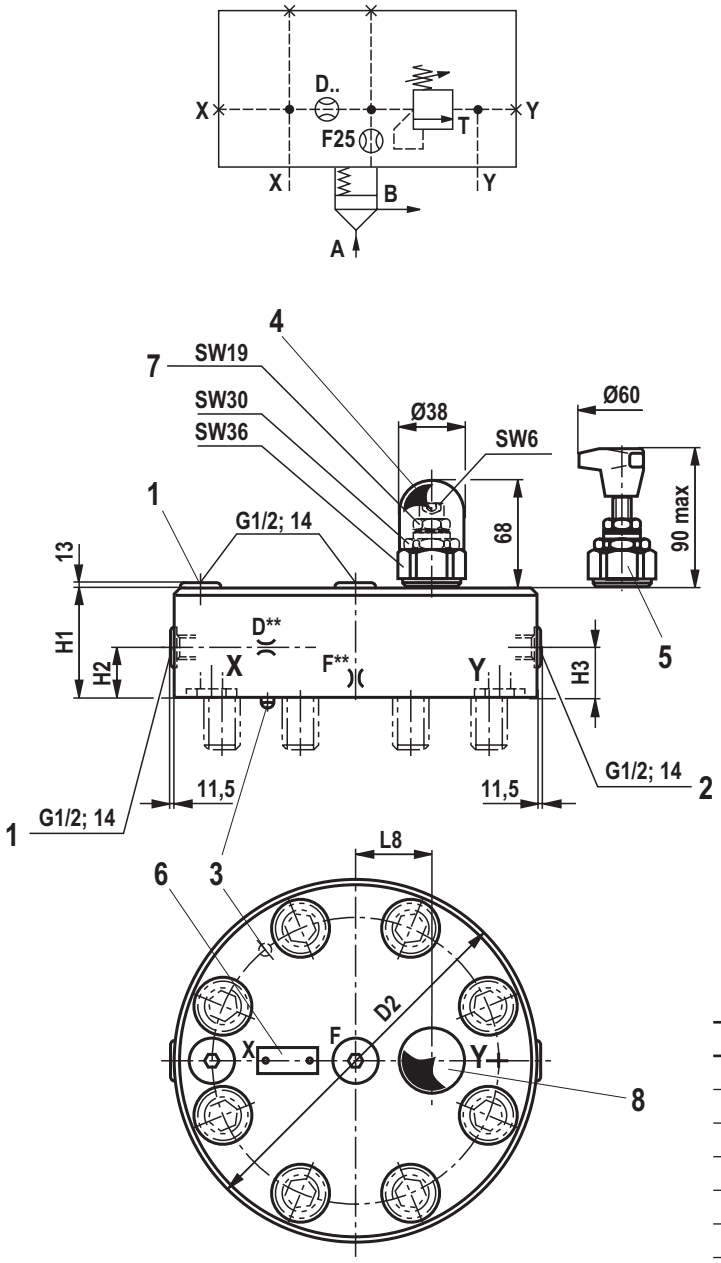

1 Port X (external) as threaded port
2 Port Y (external) as threaded port
3 Locating pin
4 Adjustment type "2"
5 Adjustment type "1"
6 Name plate
7 Lock nut
8 Pressure relief valve type DBD.10K..., data sheet 25402

NG	80	100
F**	2.5	2.5
D**	2.5	3.0
D2	250	300
H1	100	100
H2	38	38
H3	58	58
L8	50	50

** Orifice Ø

Mounting screws (see also page 80).

Notice:
The dimensions are nominal dimensions which are subject to tolerances.

PRESSURE FUNCTION

Pressure relief function – Control cover "DBEM" with electrically proportional pressure adjustment, with maximum pressure limitation

01	02	03	04	05		06	07	08	09	10	11	12	13	14	15	16
LFA		**DBEM**		**–**	**7X**	**/**	**450**			**P**						

01	Control cover	**LFA**

02	Size 16	**16**
	Size 25	**25**
	Size 32	**32**
	Size 40	**40**
	Size 50	**50**

Type

03	Electrically proportional pressure adjustment, with maximum pressure limitation	**DBEM**

Adjustment types of the pressure relief valves

04	Rotary knob	**1**
	Internal hexagon	**2**

05	Component series 70 ... 79 (70 ... 79: unchanged installation and connection dimensions) (NG16 ... 63)	**7X**

06	High-pressure series	**450**

Adjustment of the pressure relief valves

07	No pressure rating set	**no code**
	Pressure relief valve set to pressure rating	**–**
	Type-examination tested safety valve according to Pressure Equipment Directive 2014/68/EU installed	**E**
	Pressure relief valve set to pressure rating and sealed	**P**

Set pressure / response pressure (information not applicable to version "no code" in item 07)

08	410 bar	**410**
	420 bar	**420**
	430 bar	**430**
	440 bar	**440**
	450 bar	**450**

Seal material

09	H-ECOPUR	**P**
	Observe compatibility of seals with hydraulic fluid used. (Other seals upon request)	

Orifices

10 ... 16	Orifice fitting deviating from the standard version in X, P, F and D (Example: X20 → orifice Ø2 mm in channel X)	

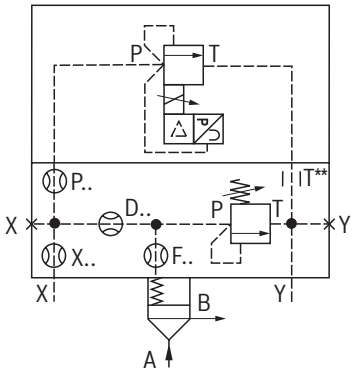

Standard orifice fitting

Orifice	Size				
	16	**25**	**32**	**40**	**50**
F	1.0	1.0	1.2	1.2	1.5
D	–	–	–	–	–
P	–	–	–	–	1.0
X	0.8	0.8	1.0	1.0	2.0

PRESSURE FUNCTION

Pressure relief function – Control cover "DBEM" with electrically proportional pressure adjustment, with maximum pressure limitation: NG16 ... 25 (dimensions in mm)

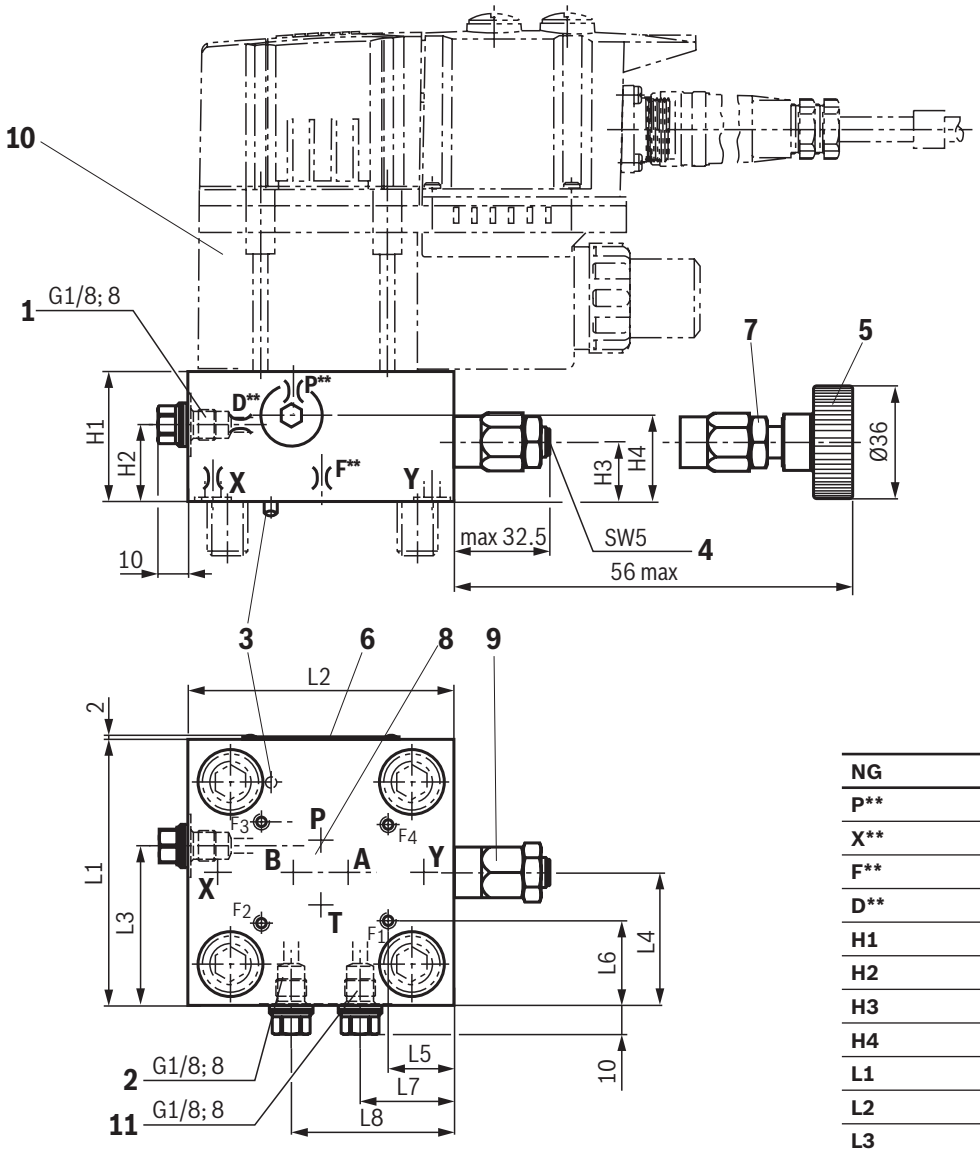

NG	16	25
P**	–	–
X**	0.8	0.8
F**	1.0	1.0
D**	–	–
H1	40	40
H2	15	23
H3	18.5	17
H4	25	26
L1	65	85
L2	80	85
L3	43	51
L4	32.5	42.5
L5	32.5	21
L6	17	27
L7	30	30
L8	47	52

** Orifice Ø

1 Port X (external) as threaded port
2 Port Z2 (external) as threaded port
3 Locating pin
4 Adjustment type "2"
5 Adjustment type "1"
6 Name plate
7 Lock nut SW17
8 Porting pattern according to ISO 4401-03-02-0-05
9 Pressure relief valve type DBD.4K..., data sheet 25710
10 Proportional pressure relief valve type DBETA..., separate order, see page 64
11 Port Y (external) as threaded port

Mounting screws (see also page 80).

Notice:
The dimensions are nominal dimensions which are subject to tolerances.

PRESSURE FUNCTION

Pressure relief function – Control cover "DBEM" with electrically proportional pressure adjustment, with maximum pressure limitation: NG32 (dimensions in mm)

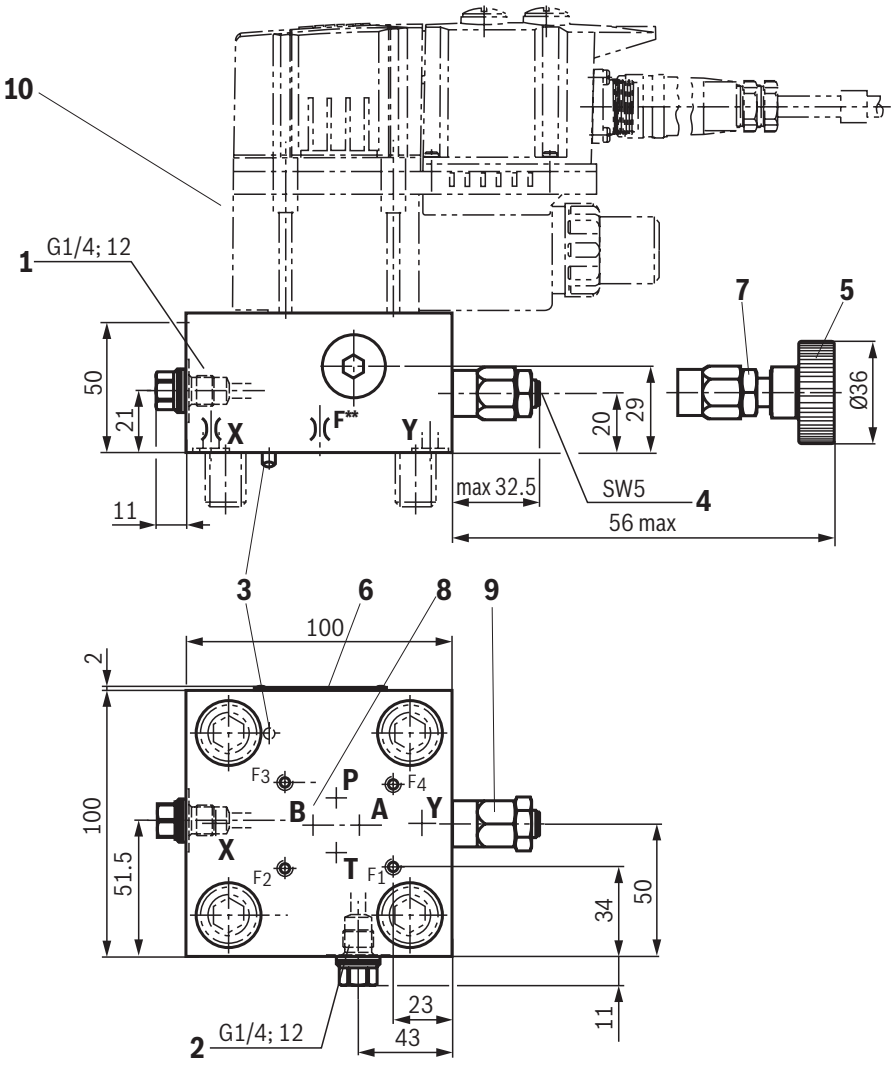

1 Port X (external) as threaded port
2 Port Y (external) as threaded port
3 Locating pin
4 Adjustment type "2"
5 Adjustment type "1"
6 Name plate
7 Lock nut SW17
8 Porting pattern according to ISO 4401-03-02-0-05
9 Pressure relief valve type DBD.4K..., data sheet 25710
10 Proportional pressure relief valve type DBETA..., separate order, see page 64

F**	D**
1.2	1.0

** Orifice Ø

Mounting screws (see also page 80).

Notice:
The dimensions are nominal dimensions which are subject to tolerances.

PRESSURE FUNCTION

Pressure relief function – Control cover "DBEM" with electrically proportional pressure adjustment, with maximum pressure limitation: NG40 and 50 (dimensions in mm)

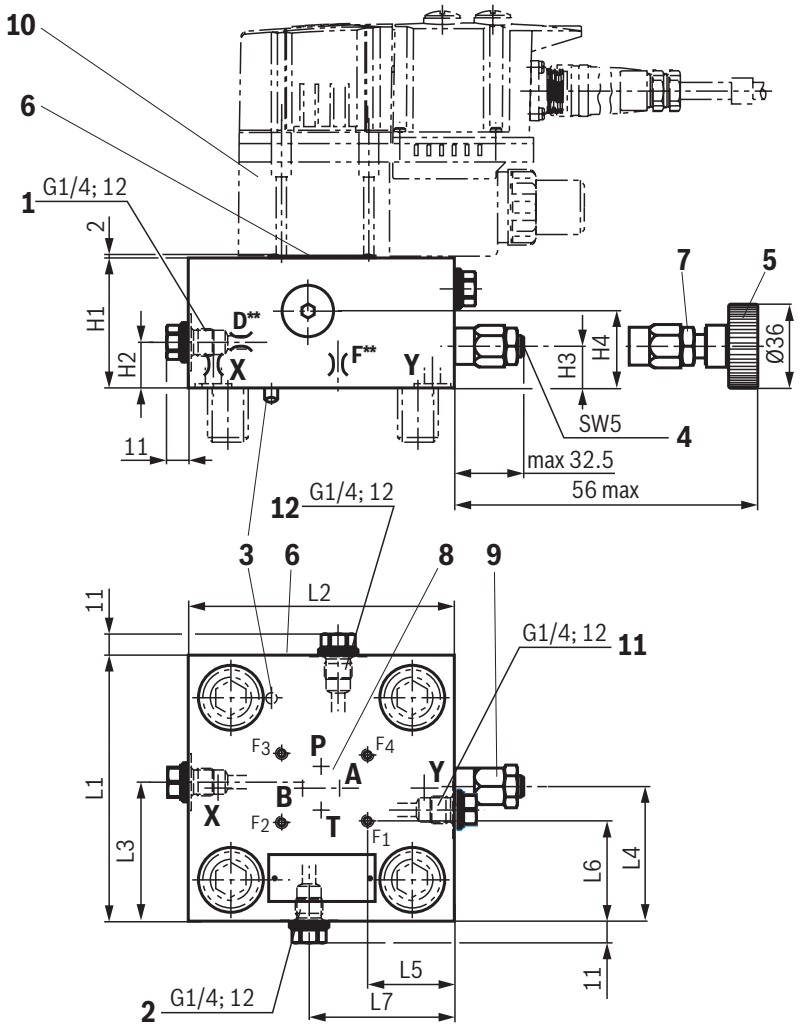

NG	40	50
P**	–	1.0
X**	1.0	2.0
F**	1.2	1.5
D**	–	–
H1	60	68
H2	20	23
H3	18.5	20
H4	35	48
L1	125	140
L2	125	140
L3	65	73
L4	63	72.5
L5	62.5	45
L6	47	54.5
L7	69	76

** Orifice Ø

1 Port X (external) as threaded port
2 Port Z2 (external) as threaded port
3 Locating pin
4 Adjustment type "2"
5 Adjustment type "1"
6 Name plate
7 Lock nut SW17
8 Porting pattern according to ISO 4401-03-02-0-05
9 Pressure relief valve type DBD.4K..., data sheet 25710
10 Proportional pressure relief valve type DBETA..., separate order, see page 64
11 Port Y (external) as threaded port
12 Port Z1 (external) as threaded port

Mounting screws (see also page 80).

☞ **Notice:**
The dimensions are nominal dimensions which are subject to tolerances.

PRESSURE FUNCTION

Pressure relief function – Control cover "DBS" with manual pressure adjustment, for electric unloading circuit

01	02	03	04		05		06	07	ß8	09	10	11	12	13	14	15	16
LFA		**DBS**		**–**		**/**	**450**			**P**							

01	Control cover	**LFA**

02	Size 16	**16**
	Size 25	**25**
	Size 32	**32**
	Size 40	**40**
	Size 50	**50**
	Size 63	**63**
	Size 80	**80**
	Size 100	**100**

Type

03	Manual pressure adjustment, for electric unloading circuit	**DBS**

Adjustment types of the pressure relief valves

04	Rotary knob	**1**
	Hexagon with protective cap / internal hexagon	**2**

05	Component series 70 ... 79 (70 ... 79: unchanged installation and connection dimensions) (NG16 ... 63)	**7X**
	Component series 60 ... 69 (60 ... 69: unchanged installation and connection dimensions) (NG80 and 100)	**6X**

06	High-pressure series	**450**

Adjustment of the pressure relief valves

07	No pressure rating set	**no code**
	Pressure relief valve set to pressure rating	**–**
	Type-examination tested safety valve according to Pressure Equipment Directive 2014/68/EU installed	**E**
	Pressure relief valve set to pressure rating and sealed	**P**

Set pressure / response pressure (information not applicable to version "no code" in item 07)

08	410 bar	**410**
	420 bar	**420**
	430 bar	**430**
	440 bar	**440**
	450 bar	**450**

Seal material

09	H-ECOPUR	**P**
	Observe compatibility of seals with hydraulic fluid used. (Other seals upon request)	

Orifices

10	Orifice in channel B	**B****
...	Orifice in channel T	**T****
16	Orifice in channel X	**X****
	Orifice fitting deviating from the standard version in A, P, F and D (Example: A20 → orifice Ø2 mm in channel A)	

PRESSURE FUNCTION

Pressure relief function – Control cover "DBS" with manual pressure adjustment, for electric unloading circuit

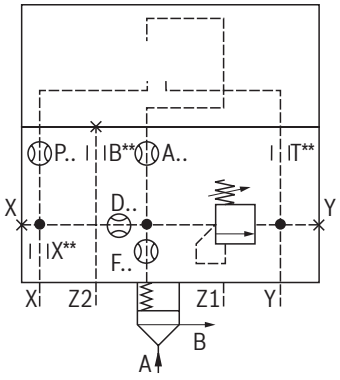

Standard orifice fitting

Orifice	Size							
	16	**25**	**32**	**40**	**50**	**63**	**80**	**100**
F	1.0	1.0	1.2	1.2	1.5	2.0	2.5	2.5
D	1.0	1.0	1.2	1.2	2.0	2.5	3.0	3.0
P	1.0	1.0	1.2	1.2	1.2	1.2	2.0	2.0
A	1.0	1.0	1.2	1.2	1.5	1.8	2.5	2.5

PRESSURE FUNCTION

Pressure relief function – Control cover "DBS" with manual pressure adjustment, for electric unloading circuit: NG16 ... 32 (dimensions in mm)

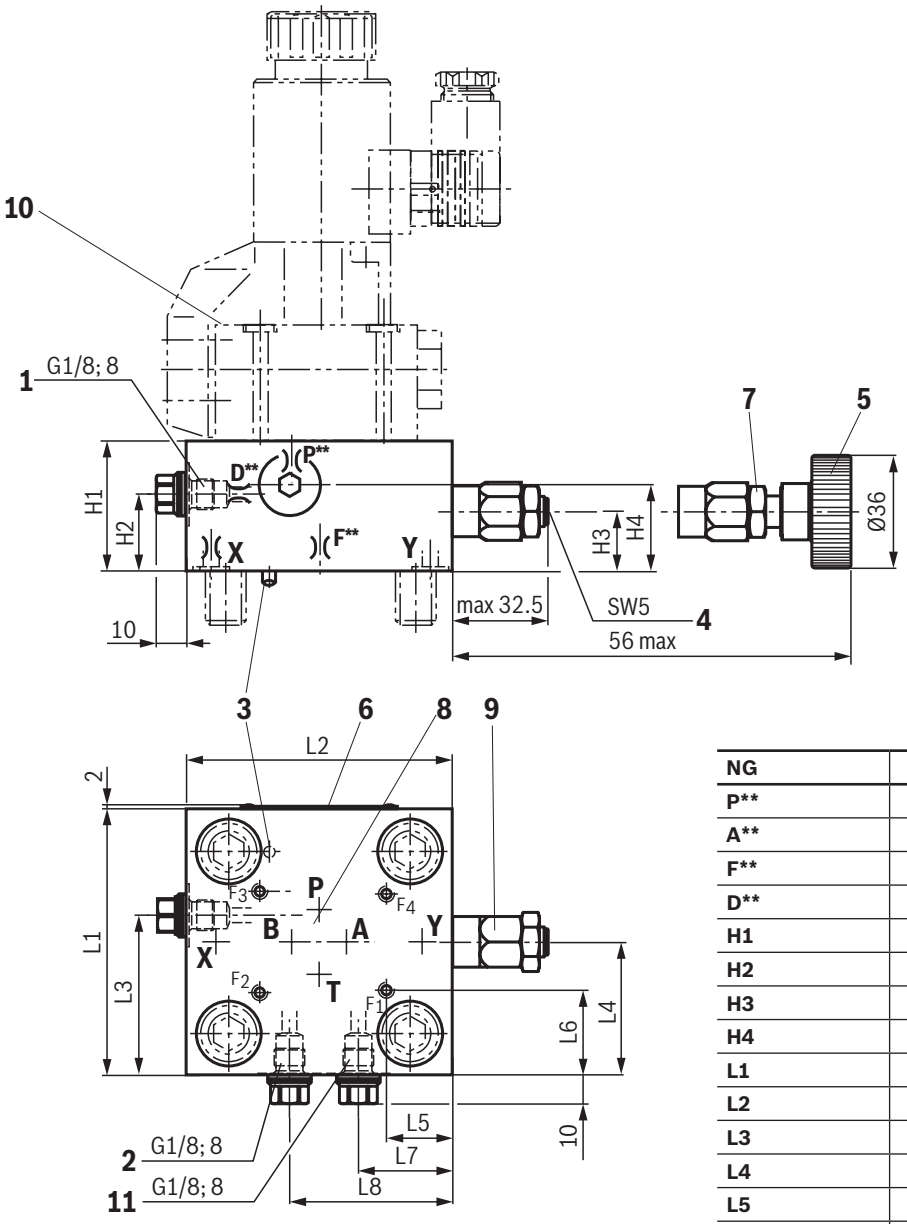

NG	16	25	32
P**	1.0	1.0	1.2
A**	1.0	1.0	1.2
F**	1.0	1.0	1.2
D**	1.0	1.0	1.2
H1	40	40	50
H2	15	23	21
H3	18.5	17	20
H4	25	26	29
L1	65	85	100
L2	80	85	100
L3	43	51	51.5
L4	32.5	42.5	50
L5	32.5	21	23
L6	17	27	34
L7	30	30	–
L8	47	52	–

** Orifice Ø

1 Port X (external) as threaded port
2 Port Z2 (external) as threaded port
3 Locating pin
4 Adjustment type "2"
5 Adjustment type "1"
6 Name plate
7 Lock nut SW17
8 Porting pattern according to ISO 4401-03-02-0-05
9 Pressure relief valve type DBD.4K..., data sheet 25710
10 Directional seat valve type 3SEW 6 U(C) ...450, separate order, see page 64
11 Port Y (external) as threaded port (NG16 and 25 only)

Mounting screws (see also page 80).

Notice:
The dimensions are nominal dimensions which are subject to tolerances.

PRESSURE FUNCTION

Pressure relief function – Control cover "DBS" with manual pressure adjustment, for electric unloading circuit: NG40 and 50 (dimensions in mm)

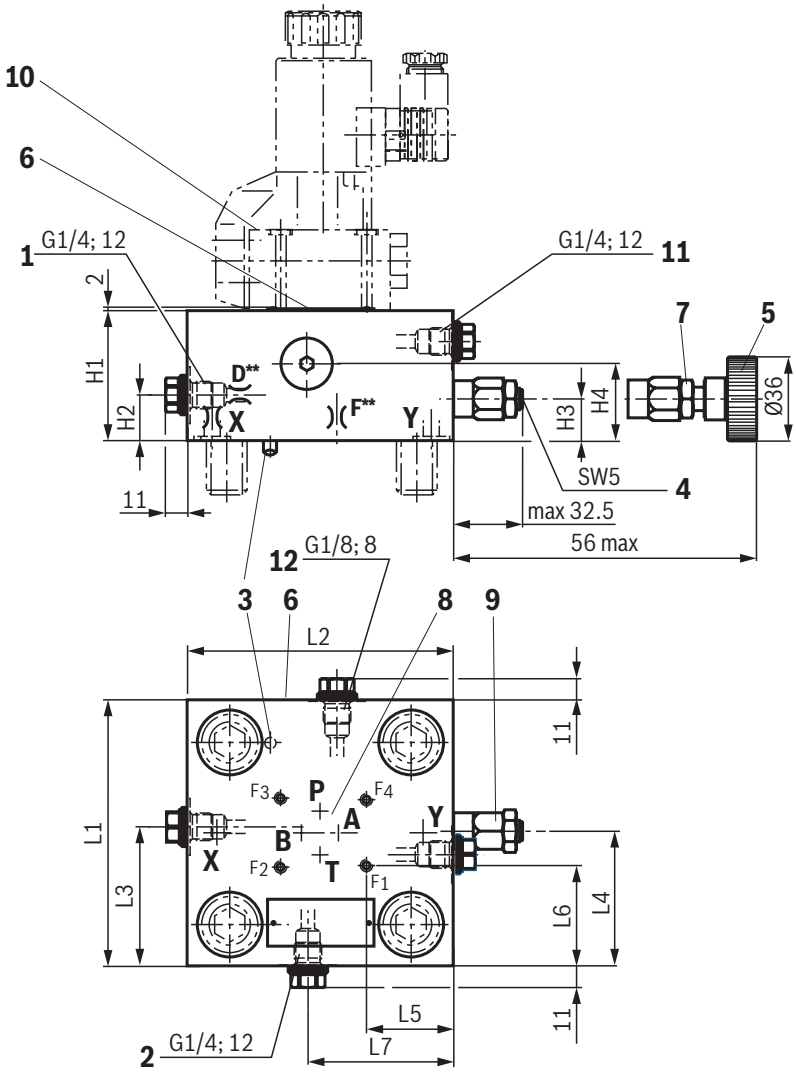

NG	40	50
A**	1.2	1.5
P**	1.2	1.2
F**	1.2	1.5
D**	1.2	2.0
H1	60	68
H2	20	23
H3	18.5	20
H4	35	48
L1	125	140
L2	125	140
L3	65	73
L4	63	72.5
L5	62.5	45
L6	47	54.5
L7	69	76

** Orifice Ø

1 Port X (external) as threaded port
2 Port Z2 (external) as threaded port
3 Locating pin
4 Adjustment type "2"
5 Adjustment type "1"
6 Name plate
7 Lock nut SW17
8 Porting pattern according to ISO 4401-03-02-0-05
9 Pressure relief valve type DBD.4K..., data sheet 25710
10 Directional seat valve type 3SEW 6 U(C) ...450, separate order, see page 64
11 Port Y (external) as threaded port (NG16 and 25 only)
12 Port Z1 (external) as threaded port

Mounting screws (see also page 80).

☞ **Notice:**
The dimensions are nominal dimensions which are subject to tolerances.

PRESSURE FUNCTION

Pressure relief function – Control cover "DBS" with manual pressure adjustment, for electric unloading circuit: NG63 (dimensions in mm)

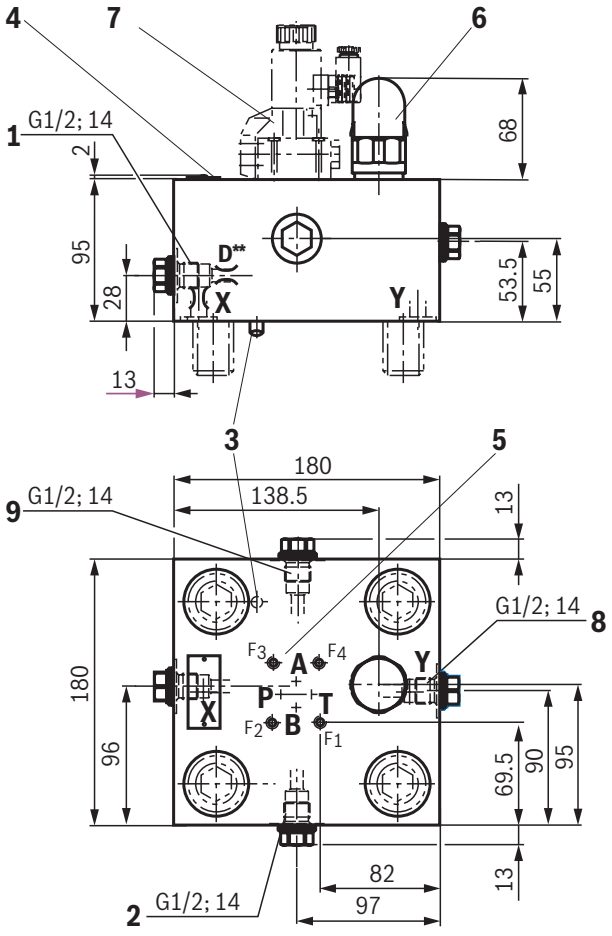

1 Port X (external) as threaded port
2 Port Z2 (external) as threaded port
3 Locating pin
4 Name plate
5 Porting pattern according to ISO 4401-03-02-0-05
6 Pressure relief valve type DBD.10K..., data sheet 25402
7 Directional seat valve type 3SEW 6 U(C) ...450, separate order, see page 64
8 Port Y (external) as threaded port
9 Port Z1 (external) as threaded port

A**	P**	F**	D**
1.8	1.2	2.0	2.5

** Orifice Ø

Mounting screws (see also page 80).

Notice:
The dimensions are nominal dimensions which are subject to tolerances.

PRESSURE FUNCTION

Pressure relief function – Control cover "DBS" with manual pressure adjustment, for electric unloading circuit: NG80 and 100 (dimensions in mm)

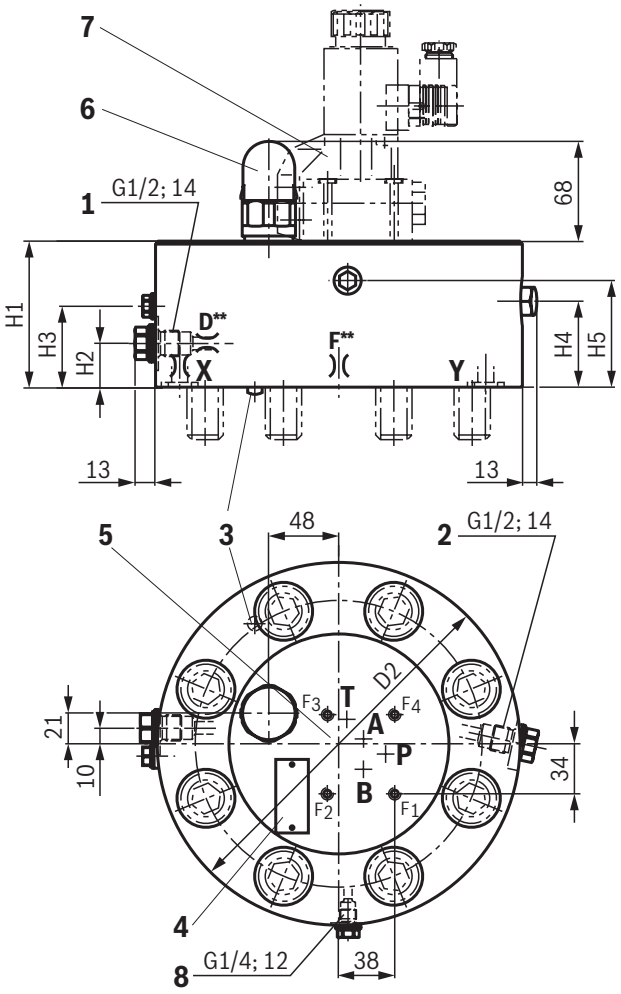

1 Port X (external) as threaded port
2 Port Y (external) as threaded port
3 Locating pin
4 Name plate
5 Porting pattern according to ISO 4401-05-04-0-05
6 Pressure relief valve type DBD.10K..., data sheet 25402
7 Directional seat valve type 3SEW 10 U(C) ...450, separate order, see page 64
8 Port Z1 (external) as threaded port

NG	80	100
A**	2.5	2.5
D**	3.0	3.0
P**	2.0	2.0
F**	2.5	2.5
D2	250	300
H1	100	110
H2	30	30
H3	55	55
H4	58.5	68.5
H5	73	73

** Orifice Ø

Mounting screws (see also page 80).

☞ **Notice:**
The dimensions are nominal dimensions which are subject to tolerances.

Mounting screws control cover LFA (separate order)

Hexagon socket head cap screws ISO 4762 - 10.9-flZn/nc/480h/C

Size	Control cover									Tightening torque M_A in Nm ±5 %
	"D"	"H."	"WEM."	"GWMA20"	"KWMA"	"HWM."	"DB"	"DBEM"	"DBS"	
16	M8 x 40	M8 x 40	M8 x 55	M8 x 55	M8 x 45	M8 x 100	M8 x 45	M8 x 45	M8 x 45	30
25	M12 x 50	M12 x 50	M12 x 50	M12 x 90	M12 x 50	M12 x 100	M12 x 50	M12 x 50	M12 x 50	90
32	M16 x 60	M16 x 80	M16 x 60	M16 x 90	M16 x 60	M16 x 110	M16 x 60	M16 x 60	M16 x 60	220
40	M20 x 70	M20 x 110	M20 x 70	M20 x 100	M20 x 70	M20 x 110	M20 x 70	M20 x 70	M20 x 70	430
50	M20 x 80	M20 x 120	M20 x 80	M20 x 80	M20 x 80	M20 x 120	M20 x 80	M20 x 80	M20 x 80	430
63	M30 x 100	M30 x 150	M30 x 100	M30 x 100	M30 x 100	M30 x 150	M30 x 110	M30 x 110	M30 x 110	1500
80	M24 x 100	M24 x 120	M24 x 100	M24 x 100	M24 x 120	–	M24 x 120	–	M24 x 120	750
100	M30 x 120	M30 x 140	M30 x 160	M30 x 120	M30 x 120	–	M30 x 120	–	M30 x 120	1500

☞ **Notes:**
- The tightening torques stated are guidelines when using screws with the specified friction coefficients and when using a manual torque wrench (tolerance ± 5%).
- The specified tightening torques were calculated with total friction coefficient μ = 0.09 ... 0.14; adjust in case of modified surfaces.

Material no. of the mounting screws

Dimension	Material no.
M8 x 40	R913015798
M8 x 45	R913015799
M8 x 55	R913015801
M8 x 100	R913014764
M12 x 50	R913015611
M12 x 90	R913015617
M12 x 100	R913014792
M16 x 60	R988025669

Dimension	Material no.
M16 x 80	R913015667
M16 x 90	R913014712
M16 x 110	R913015642
M20 x 70	R913015698
M20 x 80	R913008472
M20 x 100	R913015670
M20 x 110	R913014724
M20 x 120	R913015672

Dimension	Material no.
M24 x 100	R913014540
M24 x 120	R913014541
M30 x 100	R913015742
M30 x 150	R913015744
M30 x 120	R913015745
M30 x 140	R913015747
M30 x 150	R913015748
M30 x 160	R913015749

Characteristic curves for selecting orifices

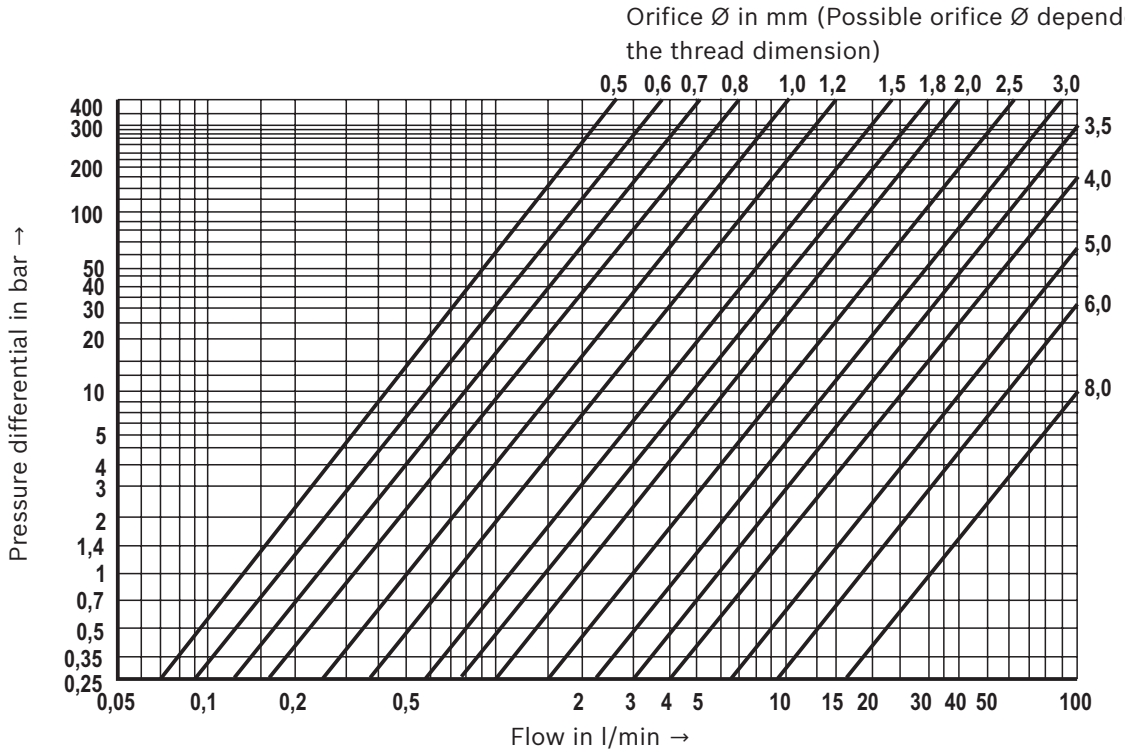

Orifices and **plug screws**

Orifices (conical)

Orifice Ø in mm	Order numbers	Material numbers							
		M6 conical	M8x1 conical	G 1/8 conical	G 1/4 conical	G 3/8 conical	G 1/2 conical	G 3/4 conical	G 1 conical
–	**00**	–	–	–	–	–	–	–	–
0.5	**05**	R913040356	R913017600	R913030187	R913040456	–	–	–	–
0.6	**06**	R913040358	R913017605	R913017606	R913020197	–	–	–	–
0.7	**07**	R913040360	R913017609	R913046092	–	–	–	–	–
0.8	**08**	R913029447	R913017614	R913017616	R913017615	R913040481	R913040499	–	–
1.0	**10**	R913019186	R913017621	R913024679	R913017622	R913040484	R913040500	–	–
1.2	**12**	R913040362	R913017627	R913017629	R913017628	R913040486	R913040501	–	–
1.5	**15**	R913028337	R913017637	R913017639	R913017638	R913040488	R913028317	–	–
1.8	**18**	R913030186	R913017644	R913017646	R913017645	R913040489	R913045913	–	–
2.0	**20**	R913029870	R913017651	R913040450	R913017652	R913028417	R913028336	R913017835	–
2.5	**25**	R913032543	R913035796	R913017656	R913019582	R913040493	R913040502	–	–
3.0	**30**	R913040368	R913017661	R913017663	R913017662	R913018266	R913040503	R913040476	R913040467
3.5	**35**	–	R913017667	R913040452	R913040463	R913028318	R913019856	R913040477	R913040469
4.0	**40**	–	R913017670	R913027078	R913040464	R913018265	R913029168	R913040478	R913040470
4.5	**45**	–	R913046571	R913017671	R913040465	–	R913040506	R913043806	–
5.0	**50**	–	–	R913017673	R913040468	R913023871	R913019857	–	R913040471
5.5	**55**	–	–	R913027077	–	R913040495	R913053659	R913040479	–
6.0	**60**	–	–	–	–	R913023870	R913028418	R913017674	R913020247
7.0	**70**	–	–	–	R913040461	R913017675	R913040509	–	–
7.5	**75**	–	–	–	–	R913023430	–	R913034192	R913018328
8.0	**80**	–	–	–	–	R913046570	R913040510	R913040482	R913020246
[1]	**99**	R913019128	R913019129	R913019137	R913019136	R913019138	R913019139	R913032612	R913019140

[1] Closed

Plug screws

Thread	Tightening torque M_A in Nm ±10 %
G1/8	18
G1/4	45
G3/8	83
G1/2	120
G3/4	175
G1	270

Further information

▶ 2-way cartridge valve directional functions	Data sheet 21010
▶ 2-way cartridge valve pressure functions	Data sheet 21050
▶ 2-way cartridge valves with spool position monitoring	Data sheet 21015
▶ 2-way cartridge valve, actively controllable, type LC2A	Data sheet 21040
▶ Directional seat valve type SEW 6	Data sheet 22058
▶ Directional seat valve type SEW 10	Data sheet 22075
▶ Pressure relief valve type DBD (NG10)	Data sheet 25402
▶ Pressure relief valve type DBD (NG4)	Data sheet 25710
▶ Proportional pressure relief valve type DBETA	Data sheet 29262
▶ Hydraulic fluids on mineral oil basis	Data sheet 90220
▶ Environmentally compatible hydraulic fluids	Data sheet 90221
▶ Flame-resistant, water-free hydraulic fluids	Data sheet 90222
▶ Flame-resistant hydraulic fluids - containing water (HFAE, HFAS, HFB, HFC)	Data sheet 90223
▶ Reliability characteristics according to EN ISO 13849	Data sheet 08012
▶ Hydraulic valves for industrial applications	Operating instructions 07600-B
▶ Selection of the filters	www.boschrexroth.com/filter

Notes

Bosch Rexroth AG
Hydraulics
Zum Eisengießer 1
97816 Lohr am Main, Germany
Phone +49 (0) 93 52 / 18-0
documentation@boschrexroth.de
www.boschrexroth.de

Evolution Motion Solutions
13835 Senlac Dr, Farmers Branch, TX 75234
800-569-9801
info@**evolution**motion.com
www.**evolution**motion.com

© This document, as well as the data, specifications and other information set forth in it, are the exclusive property of Bosch Rexroth AG. It may not be reproduced or given to third parties without its consent.
The data specified above only serve to describe the product. No statements concerning a certain condition or suitability for a certain application can be derived from our information. The information given does not release the user from the obligation of own judgment and verification. It must be remembered that our products are subject to a natural process of wear and aging.