RE 92706/2025-01-21
Replaces: 2024-05-21

Axial piston variable pump A10VO series 60



- For machines with medium pressure requirements
- Size 45
- Nominal pressure 280 bar
- Maximum pressure 320 bar
- Open circuit

Features

- Variable pump with axial piston rotary group in swashplate design for hydrostatic drives in open circuit.
- Flow is proportional to drive speed and displacement.
- The flow can be infinitely varied by adjusting the swashplate angle.
- High permissible drive speed
- Excellent power to weight ratio – compact dimensions
- Optionally available as a Silence version via pre compression volume
  – reduces pressure pulsation by up to 50%
- Excellent suction characteristics
- Short control times

Inhalt

Type code	2
Hydraulic fluids	4
Working pressure range	6
Technical data	7
DR0 – Pressure controller	9
DRF / DRS / DRC – Pressure flow controller	10
EC4 – Electrohydraulic control valve (positive control)	12
EB4 – Electrohydraulic control valve (negative control)	14
Dimensions, size 45	16
Dimensions of through-drive	20
Overview of mounting options	21
Combination pumps A10VO + A10VO	22
Connector for solenoids	23
Pressure sensor PR4	23
Swivel angle sensor	24
Installation instructions	25
Project planning notes	27
Safety instructions	28
Related documentation	29

Type code

01	02	03	04	05	06	07	08	09	10		11	12	13	14	15	16	17	18	19	20	21	22	23
	O	**0**	**045**		**00**	**0**				**/**	**60**			**V**	**B2**					**0**	**0**	**0**	

Axial piston unit — 045

01	Swashplate design, variable			without painting	●	**BA10V**
				with painting[1]	●	**LA10V**

Operating mode — 045

02	Pump, open circuit				●	**O**

Pressure range — 045

03	Medium pressure version (pressure range, see table of values on page 6)				●	**0**

Size (NG)

04	Geometric displacement, see table of values on page 7					**045**

Control device: Basic controller — 045

05	Pressure controller hydraulic	fixed setting			●	**DR0**
	With flow controller	X-T open			●	**DRF**
		X-T plugged		with flushing function	●	**DRS**
		X-T plugged		without flushing function	●	**DRC**
	Electrohydraulic control system	positive control		U = 12/24 V I = 1500 mA	●	**EC4**
		negative control			○	**EB4**

Auxiliary control function pressure regulation — 045

06	Without additional controller (without code)				●	**00**

Auxiliary regulator function, flow control — 045

07	Without additional controller (without code)				●	**0**

Connector for solenoids[2]) — 045

08	Without connector (without solenoid, only for hydraulic control)				●	**0**
	DEUTSCH – molded connector, 2-pin – without suppressor diode (for electric controls)				●	**P**

Swivel angle sensor — 045

09	Without swivel angle sensor				●	**0**
	With electric swivel angle sensor PAL (as per data sheet 95161)		ratiometric	power supply U = 5 V DC	●	**H**
			SENT		○	**P**

Pressure sensor — 045

10	Without pressure sensor				●	**0**
	With pressure sensor PR4 (SENT) (according to page 23)		thread M14 x 1.5	power supply U = 5 V DC	○	**1**
	Prepared for pressure sensor on the measuring port $\mathbf{M_B}$		thread M14 × 1.5 (standard)		●	**4**[4)]

Series — 045

11	Series 6, index 0				●	**60**

Version of port and fastening threads — 045

12	Hydraulic connections, with O-ring seal based on ISO 11926; metric fastening thread according to DIN 13 at the through drive				●	**D**[3)]
	Metric connections with O-ring seal based on ISO 6149; metric fastening thread according to DIN 13 at the through drive				●	**M**

1) Observe possible paint specification and color selection according to data sheet 90314
2) Connectors for other electric components may deviate
3) Also applies to the version without through drive
4) The pressure sensor must be designed for at least 420 bar.

● = Available ○ = On request

01	02	03	04	05	06	07	08	09	10		11	12	13	14	15	16	17	18	19	20	21	22	23
	O	**0**	**045**		**00**	**0**				**/**	**60**			**V**	**B2**					**0**	**0**	**0**	

Direction of rotation

			045	
13	Viewed on drive shaft	clockwise	●	**R**
		counter-clockwise	●	**L**

Sealing material

		045	
14	Shaft seal and O-rings FKM (fluorocarbon rubber)	●	**V**

Mounting flange

			045	
15	Based on ISO 3019-1 (SAE J744)	101-2 (B)	●	**B2**

Drive shaft

			045	
16	Splined shaft ANSI B92.1a[5]	7/8 in 13T 16/32DP	●	**S4**
		1 in 15T 16/32DP	●	**S5**

Working port (For the selection of port and fastening thread, see also order item 12)

					045	
17	SAE flange ports, port **S** and **B** according to ISO 6162	**Fastening thread version**	**Position**			
		DIN 13	rear	(not with PCV)	●	**A1**
		ASME B1.1	rear	(not with PCV)	●	**B1**
		DIN 13	laterally opposite		●	**A2**
		ASME B1.1	laterally opposite		●	**B2**

Port plate version

		045	
18	Without noise optimization	●	**0**
	Silent version with pre compression volume (only possible with port plate A2, B2)[7]	●	**S**

Through drive (for mounting options, see page 21)

							045	
19	Flange ISO 3019-1			Hub for splined shaft[5]				
	Diameter	Mounting[6]	Designation	Diameter		Designation		
	Without through drive						●	**N000**
	82-2 (A)	⊷	A2	5/8 in	9T 16/32DP	S2	●	**A2S2**
				3/4 in	11T 16/32DP	S3	●	**A2S3**
	101-2 (B)	⊷	B2	7/8 in	13T 16/32DP	S4	●	**B2S4**
				1 in	15T 16/32DP	S5	●	**B2S5**

Reduction of the geometric displacement $V_{g\,min}$ and $V_{g\,max}$

		045	
20	Displacement $V_{g\,min}$= 0 cm³; $V_{g\,max}$ = $V_{g\,max}$	●	**0**

Other sensors

		045	
21	Without sensors	●	**0**

Acceptance by classification society

		045	
22	Without acceptance	●	**0**

Standard/special version

		045	
23	Standard version	●	**0**
	Special version	●	**S**

● = Available ○ = On request

Notice

- Note the project planning notes on page 27.
- Note the project planning notes regarding each control device
- In addition to the type code, please specify the relevant technical data when placing your order.

5) According to ANSI B92.1a (splined shaft according to ISO 3019-1)
6) Mounting hole pattern viewed on through drive
7) See also additional information PCV on page 6.

Hydraulic fluids

The A10VO variable pump is designed for operation with HLP mineral oil according to DIN 51524.
See the following data sheets for application instructions and requirements for hydraulic fluids before the start of project planning:

- 90220: Hydraulic fluids based on mineral oils and related hydrocarbons

Selection of hydraulic fluid
Bosch Rexroth evaluates hydraulic fluids on the basis of the Fluid Rating according to the technical data sheet 90235.
Hydraulic fluids with positive evaluation in the Fluid Rating are provided in the following technical data sheet:

- 90245: Bosch Rexroth Fluid Rating List for Rexroth hydraulic components (pumps and motors)

The selection of hydraulic fluid must ensure that the operating viscosity in the operating temperature range is within the optimum range (v_{opt}; see selection diagram).

Viscosity and temperature of hydraulic fluids

	Viscosity	Shaft seal	Temperature[2]	Comment
Cold start	v_{max} ≤ 1600 mm²/s	FKM	ϑ_{St} ≥ −25 °C	t ≤ 3 min, without load (p ≤ 50 bar), n ≤ 1000 rpm Permissible temperature difference between axial piston unit and hydraulic fluid in the system maximum 25 K
Warm-up phase	v = 1600 ... 400 mm²/s			t ≤ 15 min, p ≤ 0.7 × p_{nom} and n ≤ 0.5 × n_{nom}
Permissible operating range	v = 400 ... 10 mm²/s[1]	FKM	ϑ ≤ +110 °C	measured at port **L_x**
	v_{opt} = 36 ... 16 mm²/s			optimal operating viscosity and efficiency range
Short-term operation	v_{min} = 10 ... 7 mm²/s	FKM		t ≤ 3 min, p ≤ 0.3 × p_{nom}, measured at port **L_x**

▼ **Selection diagram**

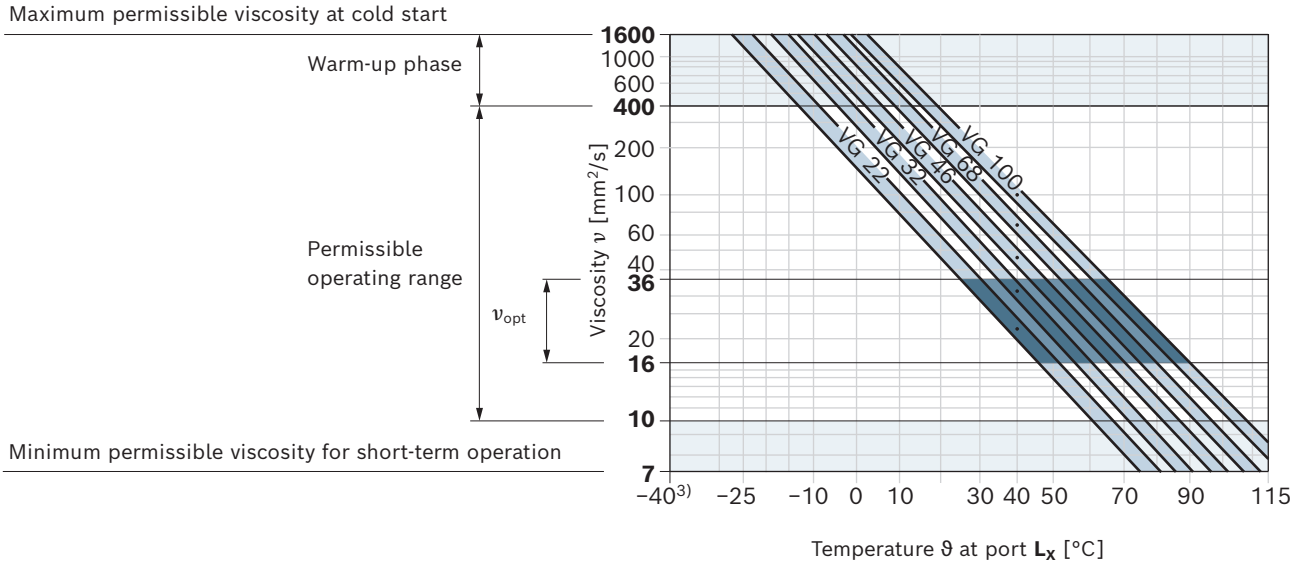

1) This corresponds, e.g. at VG 46, to a temperature range of +4 °C to +85 °C (see selection diagram)

2) If the temperature at extreme operating parameters cannot be adhered to, please contact us.

3) For applications in the low-temperature range, please contact us.

Filtration of the hydraulic fluid
Finer filtration improves the cleanliness level of the hydraulic fluid, which increases the service life of the axial piston unit.
A cleanliness level of at least 20/18/15 is to be maintained according to ISO 4406
At a hydraulic fluid viscosity of less than 10 mm^2/s (e.g. due to high temperatures during short-term operation) at the drain port, a cleanliness level of at least 19/17/14 according to ISO 4406 is required.

Examples of temperatures of hydraulic fluids at a viscosity of 10 mm^2/s:
- 73 °C at HLP 32
- 85 °C at HLP 46

Working pressure range

Pressure at port B		Definition
Nominal pressure p_{nom}	280 bar	The nominal pressure corresponds to the maximum design pressure.
Maximum pressure p_{max}	320 bar	The maximum pressure corresponds to the maximum working pressure within a single operating period. The sum of the single operating periods must not exceed the total operating period (maximum number of cycles: approx. 1 million).
Single operating period	0.05 s	
Total operating period	14 h	
Minimum pressure $p_{B\,abs}$ (high-pressure side)	10 bar	Minimum pressure on the high-pressure side (**B**) which is required in order to prevent damage to the axial piston unit.
Rate of pressure change $R_{A\,max}$	16000 bar/s	Maximum permissible speed of pressure build-up and reduction during a pressure change across the entire pressure range.
Pressure at suction port S (inlet)		
Minimum pressure $p_{S\,min}$	0.8 bar absolute	Minimum pressure at suction port **S** (inlet) which is required to prevent damage to the axial piston unit. The minimum pressure depends on the rotational speed, and displacement of the axial piston unit.
Maximum pressure $p_{S\,max}$	5 bar absolute	
Case pressure at port L_1, L_2		
Maximum pressure $p_{L\,max}$	2 bar absolut[1)]	Maximum 0.5 bar higher than inlet pressure at port **S**, but not higher than $p_{L\,max}$. The case pressure must always exceed the ambient pressure. A drain line to the reservoir is required.
Pilot pressure port X with external high pressure		
Maximum pressure p_{max}	320 bar	For the design of all control lines pressurized with external high pressure, the values for the rate of pressure change, maximum single operating period and total operating period applicable to port **B** must not be exceeded.

▼ **Rate of pressure change $R_{A\,max}$**

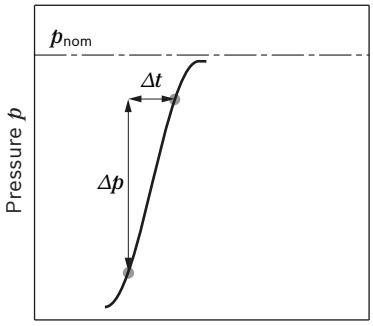

Pre compression volume for pulsation reduction (PCV)

The PCV reduces the pressure pulsation applied to the system by the pump. The peak-to-peak pulsation [bar] is reduced by approximately 30 to 50% depending on the operating point.

Depending on the mechanical design of the working machine, in our experience machine noise is reduced quite significantly.

The pre compression volume can be ordered via the type code order item 18 on page 3.

▼ **Pressure definition**

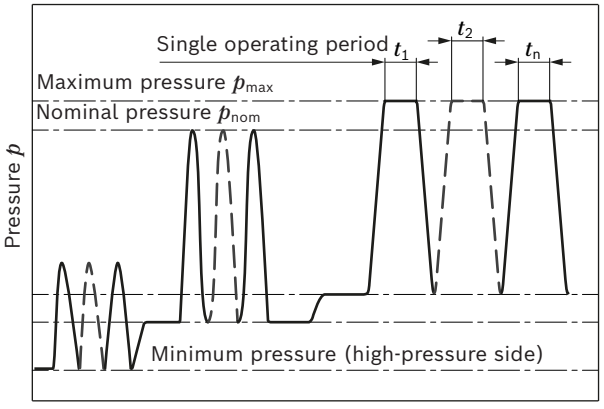

Total operating period = $t_1 + t_2 + ... + t_n$

Notice

Working pressure range applies when using hydraulic fluids based on mineral oils. Please contact us for values for other hydraulic fluids.

1) Higher housing pressures on request

Technical data

Size		NG		45
Geometric displacement, per revolution		$V_{g\,max}$	cm^3	45
Maximum rotational speed[1]	at $V_{g\,max}$	n_{nom}	rpm	3000
Minimum rotational speed[3]	at $V_{g\,max}$	n_{min}	rpm	500
Flow	at n_{nom} and $V_{g\,max}$	q_v	l/min	135
	at n_E = 1500 rpm	q_{vE}	l/min	67.5
Power	at n_{nom}, $V_{g\,max}$ and Δp = 280 bar	P	kW	63
	at n_E = 1500 rpm $V_{g\,max}$ and Δp = 280 bar	P_E	kW	31.5
Torque	at $V_{g\,max}$ and Δp = 280 bar	M	Nm	200
Rotary stiffness of drive shaft	S4	c	Nm/rad	25400
	S5	c	Nm/rad	34900
Moment of inertia of the rotary group		J_{TW}	kgm^2	0.002777
Maximum angular acceleration[2]		α	rad/s^2	9500
Case volume		V	l	0.37
Weight approx.	Without through drive	m	kg	18
	With through drive	m	kg	21.3

Determination of the characteristics						
Flow	q_v	=	$\frac{V_g \times n \times \eta_v}{1000}$			[l/min]
Torque	M	=	$\frac{V_g \times \Delta p}{20 \times \pi \times \eta_{hm}}$			[Nm]
Power	P	=	$\frac{2 \pi \times M \times n}{60000}$	=	$\frac{q_v \times \Delta p}{600 \times \eta_t}$	[kW]

Key

V_g Displacement per revolution [cm^3]
Δp Differential pressure [bar]
n Rotational speed [rpm]
η_v Volumetric efficiency
η_{hm} Hydraulic-mechanical efficiency
η_t Total efficiency ($\eta_t = \eta_v \times \eta_{hm}$)

Notice

- Theoretical values, without efficiency and tolerances; values rounded
- Operation above the maximum values or below the minimum values may result in a loss of function, a reduced service life or in the destruction of the axial piston unit. Bosch Rexroth recommends testing the loads by means of experiment or calculation / simulation and comparison with the permissible values.

1) The values are applicable:
– at an absolute pressure p_{abs} = 1 bar at the suction port **S**
– for the optimum viscosity range from v_{opt} = 36 to 16 mm^2/s
– with hydraulic fluid based on mineral oils
Higher rotational speeds on request

2) The data are valid for values between the minimum required and maximum permissible rotational speed. Valid for external excitation (e.g. diesel engine 2 to 8 times the rotary frequency; cardan shaft 2 times the rotary frequency). The limit value is only valid for a single pump. The load capacity of the connection parts must be considered.

3) Depending on the load cycle, lower rotational speeds are possible, please contact us.

Permissible radial and axial loading of the drive shaft

Notice

- For drives with radial loading (pinions, V-belt drives), please contact us!
- For drives with axial loading drives, please contact us!

Permissible input and through-drive torques

Size				45
Torque at $V_{g\,max}$ and Δp = 280 bar[1]		M_{max}	Nm	200
Maximum input torque on drive shaft[2]				
	S4	$M_{E\,max}$	Nm	255
		Ø	in	7/8
	S5	$M_{E\,max}$	Nm	450
		Ø	in	1
Through-drive torque, maximum[1]				
	S4	$M_{D\,max}$	Nm	255
	S5	$M_{D\,max}$	Nm	285

▼ **Distribution of torques**

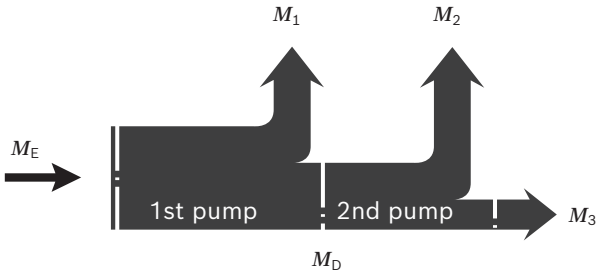

Torque at 1st pump	M_1		
Torque at 2nd pump	M_2		
Torque at 3rd pump	M_3		
Input torque	M_E	=	$M_1 + M_2 + M_3$
	M_E	<	$M_{E\,max}$
Through-drive torque	M_D	=	$M_2 + M_3$
	M_D	<	$M_{D\,max}$

1) Efficiency not considered
2) For drive shafts with no radial force

DR0 – Pressure controller

The pressure controller limits the maximum pressure at the pump outlet within the control range of the variable pump. The variable pump only supplies as much hydraulic fluid as is required by the consumers. If the working pressure exceeds the pressure command value at the pressure valve, the pump will regulate to a smaller displacement and reduce the control differential.

- Basic position in depressurized state: $V_{g\,max}$.
- Setting range[1] for pressure control 210 to 280 bar.
  Preferred variants 210, 250 and 280 bar
  Standard is 280 bar.
  Differing settings on request.

▼ **Characteristic curve DR**

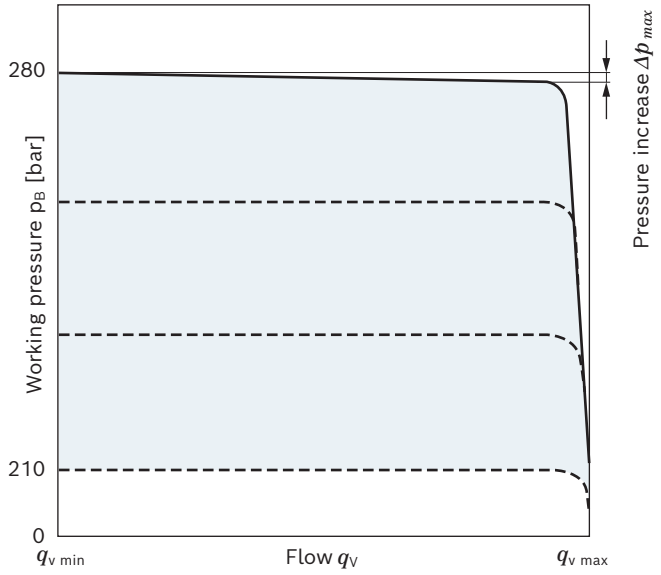

Characteristic curve valid for n_1 = 1500 rpm and t_{fluid} = 50 °C.

▼ **Circuit diagram DR0**

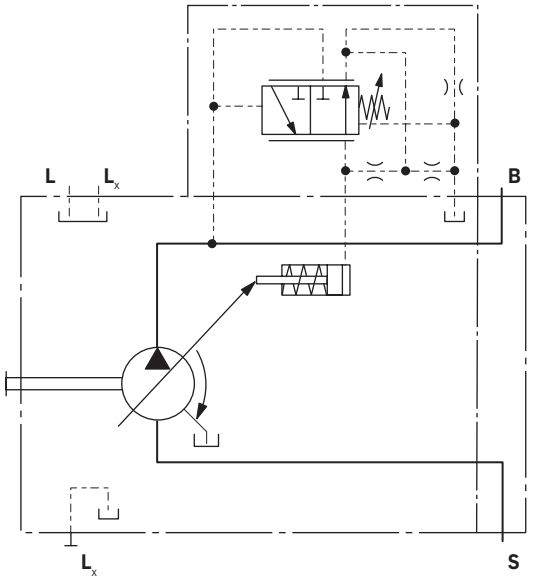

Controller data

Size		45
Pressure increase	Δp [bar]	maximum 6
Hysteresis	Δp [bar]	maximum 4
Pilot fluid consumption	l/min	maximum approx. 3

1) In order to prevent damage to the pump and the system, the permissible setting range must not be exceeded. The range of possible settings at the valve is higher.

DRF / DRS / DRC – Pressure flow controller

In addition to the pressure controller function (see page 9), an adjustable orifice (e.g. directional valve) is used to adjust the differential pressure upstream and downstream of the orifice. This is used to control the pump flow. The pump flow is equal to the actual hydraulic fluid quantity required by the consumer. With all controller combinations, the V_g reduction has priority.

- Basic position in depressurized state: $V_{g\,max}$.
- Setting range[1] up to 210 to 280 bar.
  Preferred variants 210, 250 and 280 bar
  Standard is 280 bar.
  Differing settings on request.
- DR pressure controller data see page 9

▼ **Characteristic curve DRF / DRS / DRC**

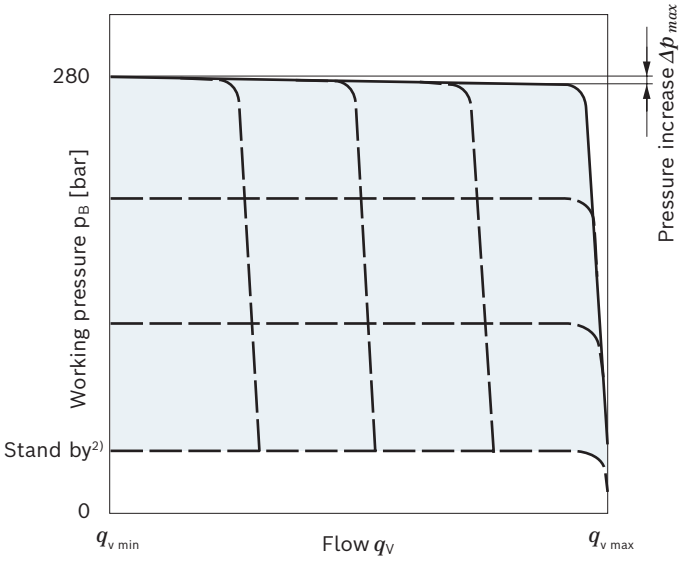

▼ **Characteristic curve at variable rotational speed**

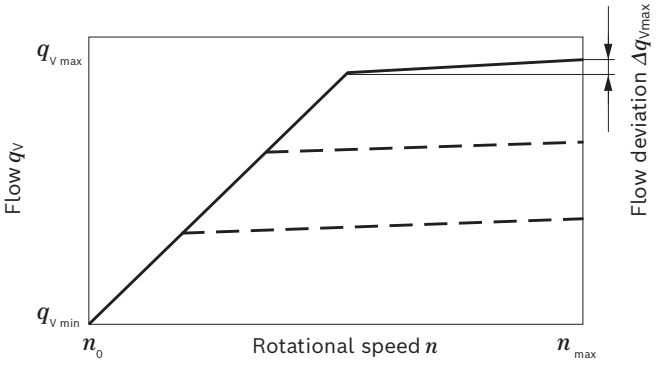

Characteristic curves valid for n_1 = 1500 rpm and t_{fluid} = 50 °C.

1) In order to prevent damage to the pump and the system, the permissible setting range must not be exceeded.
The range of possible settings at the valve is higher.

2) Zero stroke pressure from differential pressure setting Δp on controller (**2**)

Connection options at port **B**
(not included in the scope of delivery)

LS mobile control blocks	Data sheets
M4-12	64276
M4-15	64283
LUDV mobile control blocks	
M7-22	64295

▼ **Circuit diagram DRS**

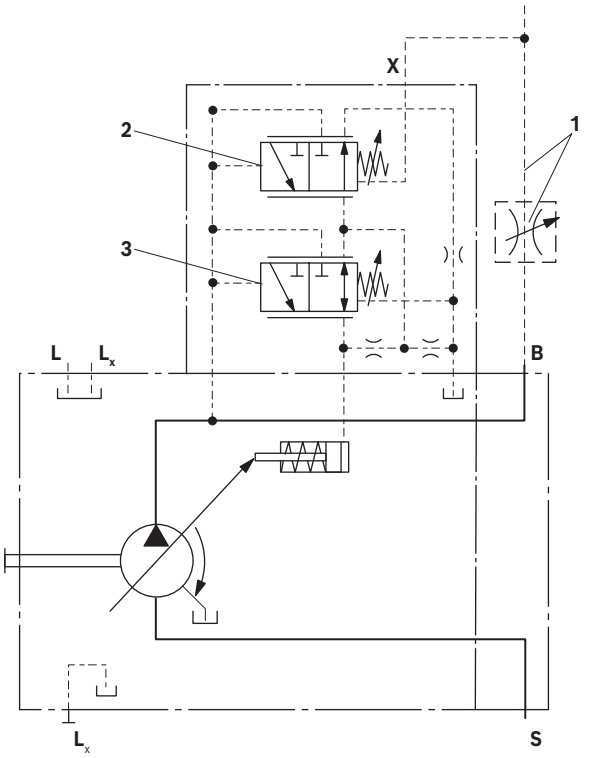

1 The metering orifice (control block) and the line is not included in the scope of delivery.
2 Flow controller (**S** or **C**).
3 Pressure controller (**DR**)

Notice
The DRS and DRC versions have no unloading from **X** to the reservoir.
The LS must thus be unloaded in the system.
Because of the flushing function of the flow controller in the DRS control valve, sufficient unloading of the **X** line must also be ensured.
If this unloading of the X line cannot be ensured, the DRF control valve must be used.

For further information see page 11

Differential pressure Δp:

- Standard setting: 14 bar
  If another setting is required, please state in the plain text.
- Setting range: 14 bar to 22 bar or
  20 bar to 30 bar
  Preferred variants:
  - 14 bar, 20 bar
    (setting range 14 bar to 22 bar)
  - 22 bar, 24 bar and 30 bar
    (setting range 20 bar to 30 bar)

  Deviating settings on request

Unloading port **X** to the reservoir results in a zero stroke pressure (standby) which is approx. 1 to 2 bar higher than the defined differential pressure Δp, however system influences are not taken into account.

Controller data

- DR pressure controller data, see page 9.
- Maximum flow deviation measured at drive speed n = 1500 rpm.

Size		**45**
Pressure increase	Δq [bar]	6
Flow deviation	Δq_{vmax} [l/min]	1.8
Hysteresis	Δp [bar]	maximum 4
Pilot fluid consumption	l/min	maximum approx. 3

EC4 – Electrohydraulic control valve (positive control)

The proportional directional valve EC4 serves to control an axial piston variable pump with eOC control functions in an electronically closed-loop control circuit.
The valve spool is clamped between a proportional solenoid and a spring and releases an opening cross-section depending on the stroke.
This results in a proportionality of the solenoid current with respect to the opening cross-section and thus the swiveling speed of the pump.
The neutral position, which does not lead to a swivel motion, is assigned to a corresponding neutral current.
If the solenoid current is above the neutral current ($I_{neutral}$), the pump swivels in the direction of $V_{g\,max}$/100%; if it is below, the pump swivels in the direction of $V_{g\,min}$/0%.
For control of the pump with BODAS eOC, a swivel angle sensor is required.
Further information about the swivel angle sensor PAL 2/10 is provided on page 24 and in data sheet 95161.
Further information on project planning of the BODAS eOC control system including other required system components can be found in data sheet 95345.
The BODAS eOC control software supports all four basic control types of axial piston variable pumps in electrically connected control circuits:

- Pressure and differential pressure regulation (p)
- Swivel angle and flow control (α)
- Torque control (M)
- Power control

▼ **Control variants with EC4**
Representation for positive quadrants 0% to +100%

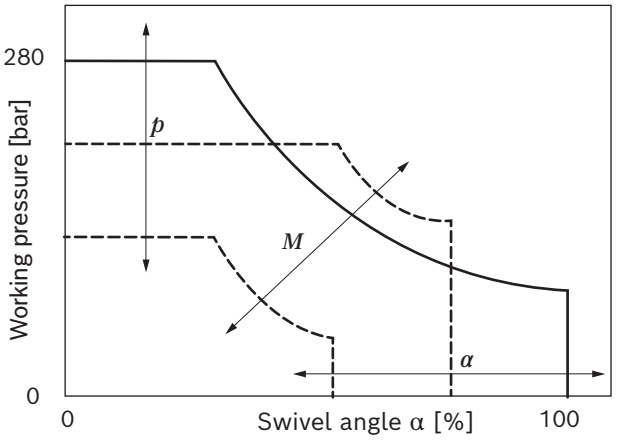

▼ **Circuit diagram EC4**

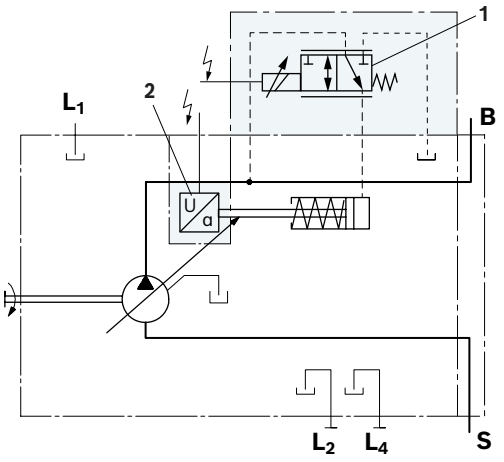

1 Proportional directional valve EC4
2 Swivel angle sensor (see data sheet 95161)

For further technical data on the solenoid with respective information, see pages 13 and 23.

The following electronic control units are available for control:

BODAS Controllers	Data sheet
RC5-6, series 40	95207
RC18-12, series 40	95208
RC27-18, series 40	95208

▼ **Operating principle EC4**

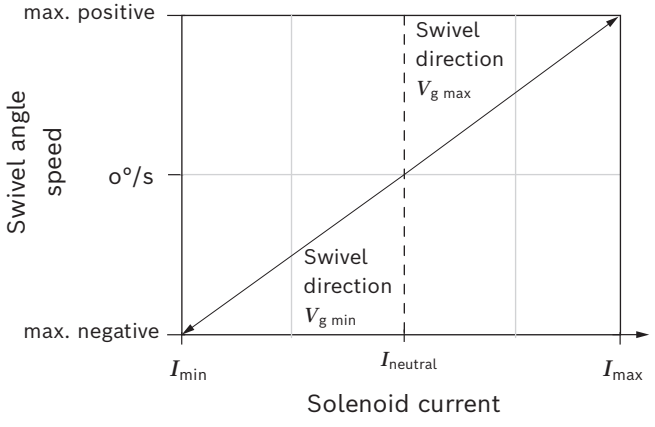

Solenoid technical data

	EC4
Maximum solenoid current	1900 mA
Nominal resistance at 20 °C winding temperature	4.26 ±0.26 Ω
Hot resistance at 180 °C winding temperature	6.92 ±0.42 Ω
Limit temperature for winding	insulating material class H (180 °C)
Hydraulic fluid or operating temperature	from -40 °C to 110 °C
Type of protection, see page 23	

Notice

- The limit voltage of the coil is 36 VDC. In general, the maximum current must not be exceeded by the actual current.
- For calculation of the hot resistance, a temperature coefficient of 0.0039k^{-1} is to be applied.

▼ **Characteristic curve of permitted operating range**
Example:
An ambient temperature of 110 °C is permitted at 88 °C hydraulic fluid temperature.

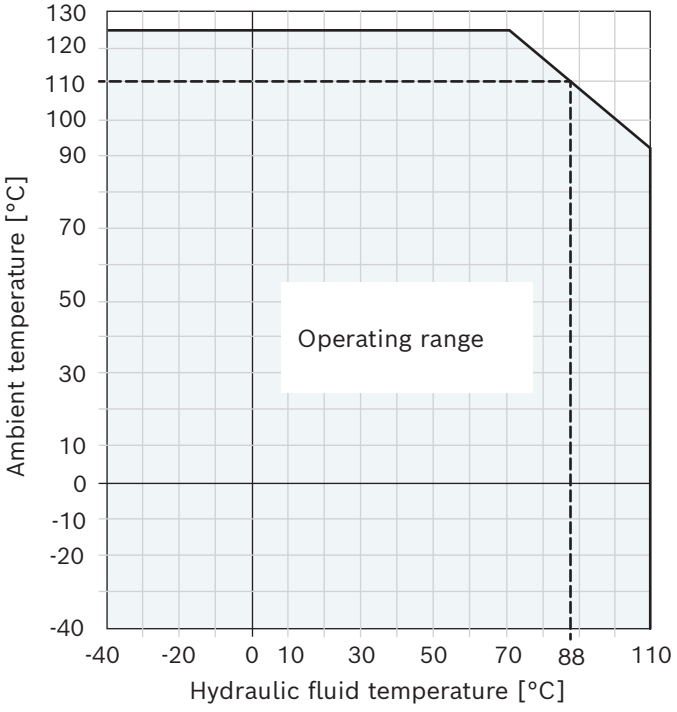

EB4 – Electrohydraulic control valve (negative control)

The proportional directional valve EB4 serves to control an axial piston variable pump with eOC control functions in an electronically closed-loop control circuit.
The valve spool is clamped between a proportional solenoid and a spring and releases an opening cross-section depending on the stroke.
This results in a proportionality of the solenoid current with respect to the opening cross-section and thus the swiveling speed of the pump.
The neutral position, which does not lead to a swivel motion, is assigned to a corresponding neutral current.
If the solenoid current is below the neutral current ($I_{neutral}$), the pump swivels in the direction of $V_{g\,max}$/100%; if it is above, the pump swivels in the direction of $V_{g\,min}$/0%.
For control of the pump with BODAS eOC, a swivel angle sensor is required.
Further information about the swivel angle sensor PAL 2/10 is provided on page 24 and in data sheet 95161.
Further information on project planning of the BODAS eOC control system including other required system components can be found in data sheet 95345.
The BODAS eOC control software supports all four basic control types of axial piston variable pumps in electrically connected control circuits:

- Pressure and differential pressure regulation (p)
- Swivel angle and flow control (α)
- Torque control (M)
- Power control

▼ **Control variants with EB4**
Representation for positive quadrants 0% to +100%

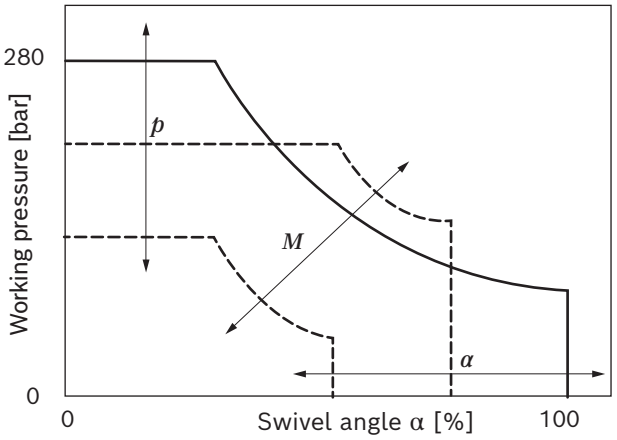

▼ **Circuit diagram EB4**

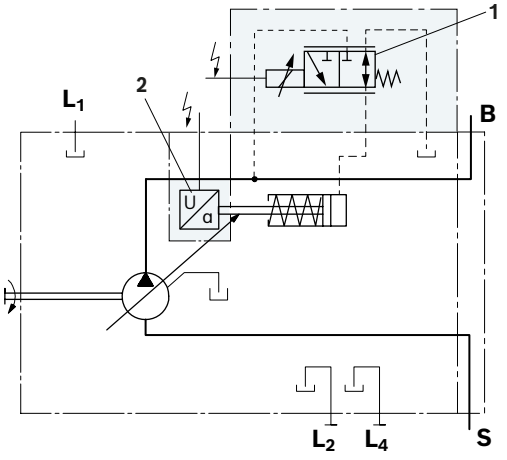

1 Proportional directional valve EB4
2 Swivel angle sensor (see data sheet 95161)

For further technical data on the solenoid with respective information, see pages 15 and 23.

The following electronic control units are available for control:

BODAS Controllers	Data sheet
RC5-6, series 40	95207
RC18-12, series 40	95208
RC27-18, series 40	95208

▼ **Operating principle EB4**

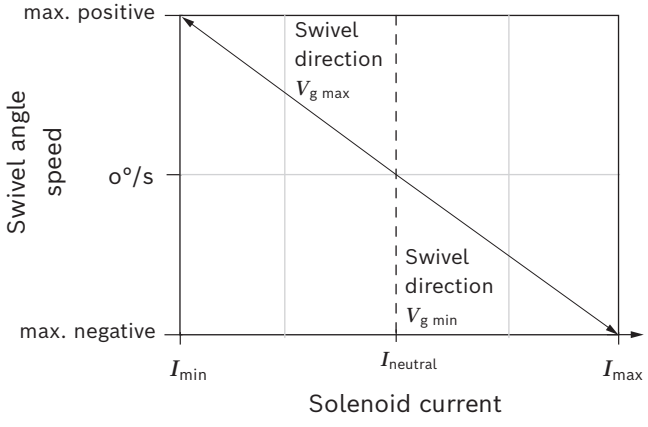

Solenoid technical data

	EB4
Maximum solenoid current	3500 mA
Nominal resistance at 20 °C winding temperature	4.26 ±0.26 Ω
Hot resistance at 180 °C winding temperature	6.92 ±0.42 Ω
Limit temperature for winding	insulating material class H (180 °C)
Hydraulic fluid or operating temperature	from -40 °C to 110 °C
Type of protection, see page 23	

Notice

- The limit voltage of the coil is 36 VDC. In general, the maximum current must not be exceeded by the actual current.
- For calculation of the hot resistance, a temperature coefficient of 0.0039k^{-1} is to be applied.

▼ **Characteristic curve of permitted operating range**
Example:
An ambient temperature of 110 °C is permitted at 88 °C hydraulic fluid temperature.

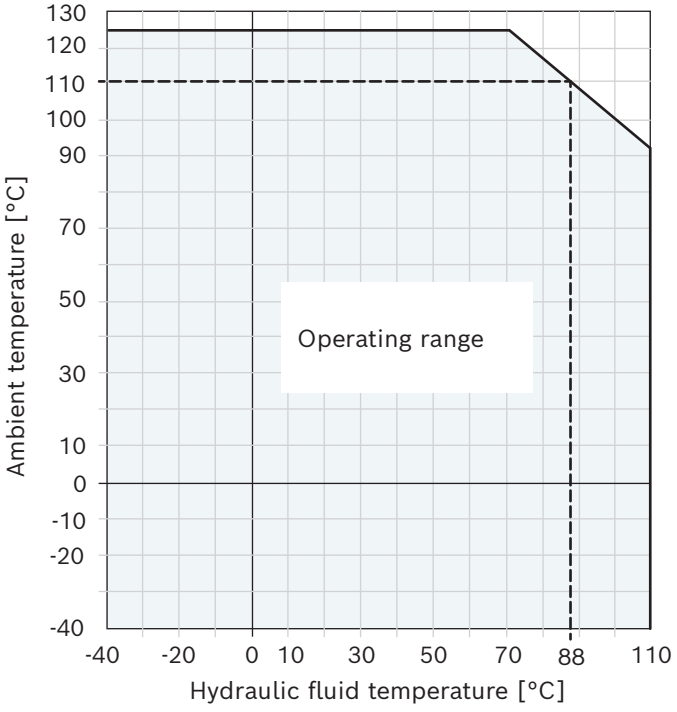

Dimensions, size 45

EC4, EB4 – electrohydraulic control system, clockwise rotation, port plate A(B)2N000

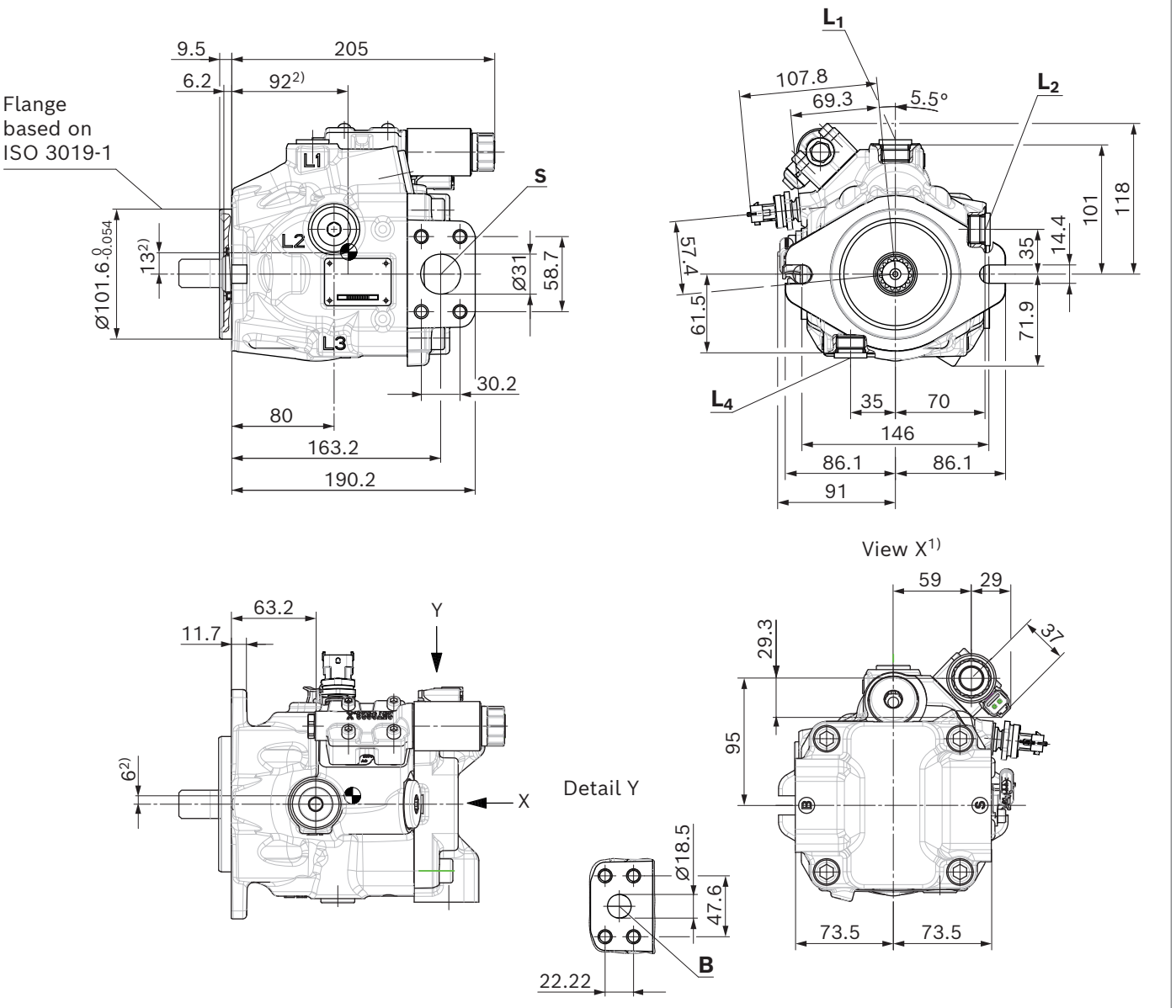

1) Dimensions of working ports turned through 180° for counter-clockwise rotation
2) Center of gravity

DRF/DRS/DRC – Pressure and flow controller, clockwise rotation, port plate A(B)1N000

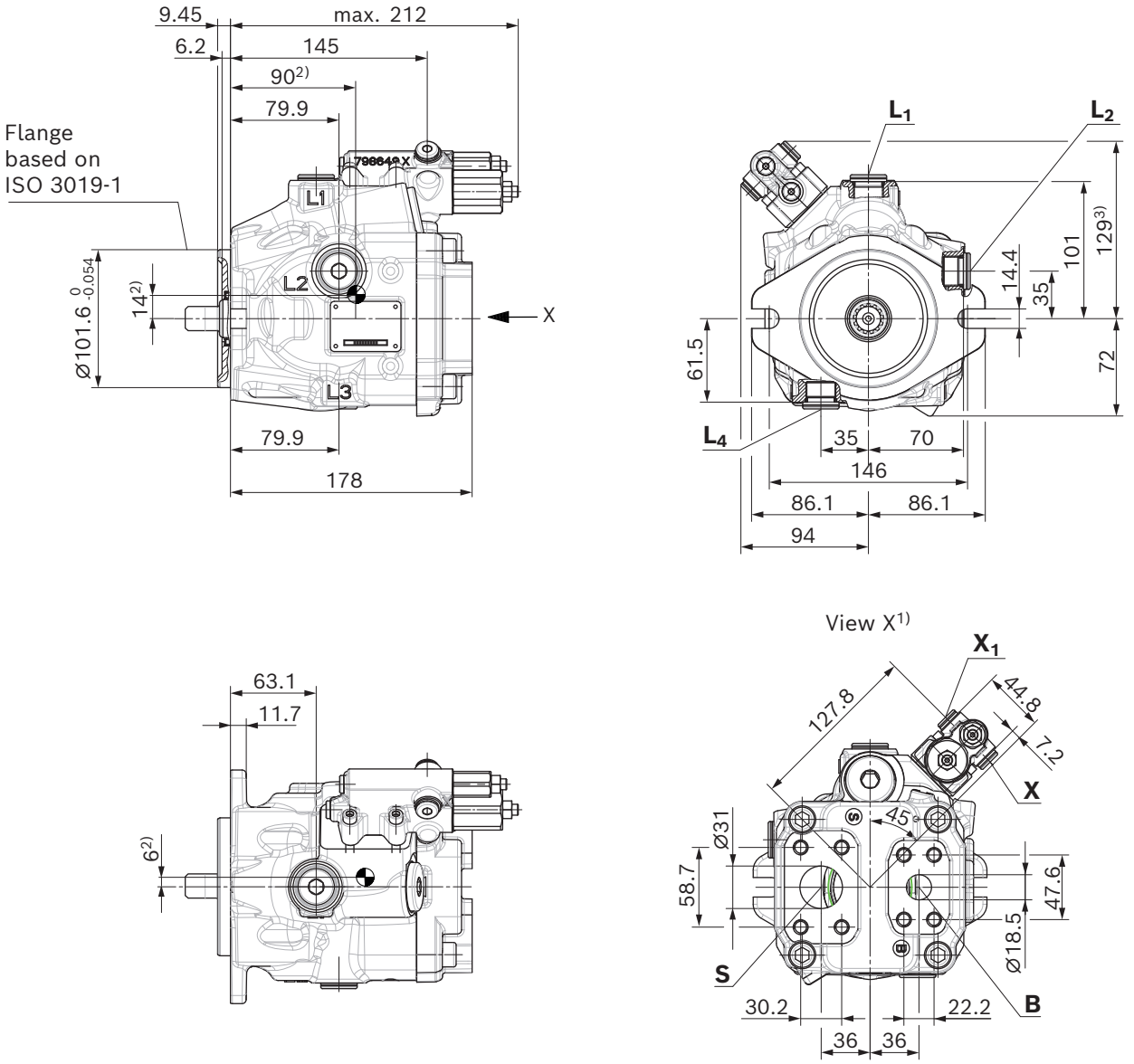

1) Dimensions of working ports turned through 180° for counter-clockwise rotation
2) Center of gravity
3) 130.7 mm for version "M" with metric X-port

▼ **Splined shaft 7/8 in (22-4, ISO 3019-1)**

S4 – 13T 16/32DP[1)]

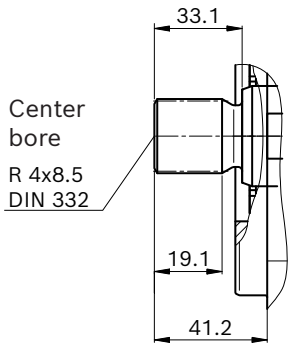

▼ **Splined shaft 1 in (25-4, ISO 3019-1)**

S5 – 15T 16/32DP[1)]

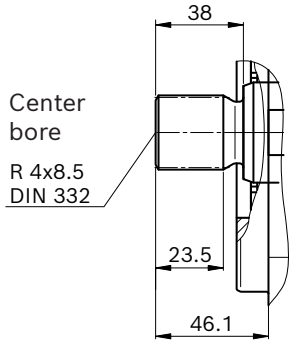

"Port plate Bx" version		**Standard**	**Size**	p_{max} **[bar]**[2)]	**State**[5)]
B	Working port (standard pressure series) Fastening thread	ISO 6162-1 ASME B1.1	3/4 in 3/8-16UNC; 22 deep	320	O
S	Suction port (standard pressure series) Fastening thread	ISO 6162-1 ASME B1.1	1 1/4 in 7/16-14UNC; 25 deep	5	O
Ports version "D"		**Standard**	**Size**	p_{max} **[bar]**[2)]	**State**[5)]
$\mathbf{L}_1$	Drain port	ISO 11926[3)]	7/8-14UNF-2B; 17 deep	2	O[4)]
$\mathbf{L}_2$; $\mathbf{L}_4$	Drain port	ISO 11926[3)]	7/8-14UNF-2B; 17 deep	2	X[4)]
X; $\mathbf{X}_1$	Pilot pressure	ISO 11926	7/16-20UNF-2B; 11.5 deep	320	O
$\mathbf{M}_B$	Measuring port (Prepared for pressure sensor PR4, code 4)	ISO 6149	M14 × 1.5; 11.5 deep	320	X
"Port plate Ax" version		**Standard**	**Size**	p_{max} **[bar]**[2)]	**State**[5)]
B	Working port (standard pressure series) Fastening thread	ISO 6162-1 DIN 13	3/4 in M10 × 1.5; 18 deep	320	O
S	Suction port (standard pressure series) Fastening thread	ISO 6162-1 DIN 13	1 1/4 in M10 × 1.5; 18 deep	5	O
Ports version "M"		**Standard**	**Size**	p_{max} **[bar]**[2)]	**State**[5)]
$\mathbf{L}_1$	Drain port	ISO 6149[3)]	M22 × 1.5; 15.5 deep	2	O[4)]
$\mathbf{L}_2$; $\mathbf{L}_4$	Drain port	ISO 6149[3)]	M22 × 1.5; 15.5 deep	2	X[4)]
X; $\mathbf{X}_1$	Pilot pressure	ISO 6149	M12 × 1.5; 11.5 deep	320	O
$\mathbf{M}_B$	Measuring port (Prepared for pressure sensor PR4, code 4)	ISO 6149	M14 × 1.5; 11.5 deep	320	X

1) Involute spline according to ANSI B92.1a, 30° pressure angle, flat root, side fit, tolerance class 5
2) Depending on the application, momentary pressure peaks can occur. Keep this in mind when selecting measuring devices and fittings.
3) The countersink may be deeper than specified in the standard.
4) Depending on the installation position, $\mathbf{L}_1$, $\mathbf{L}_2$ or $\mathbf{L}_x$ must be connected (also see installation instructions starting on page 25).
5) O = Must be connected (plugged on delivery)
X = Plugged (in normal operation)

▼ **DR0 – Pressure controller**

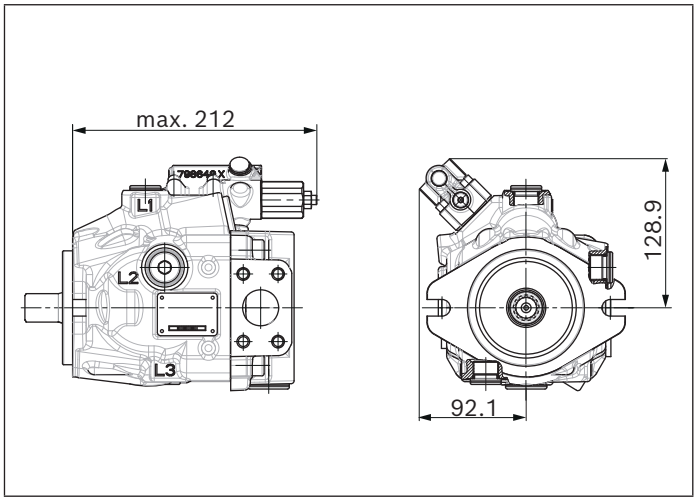

Dimensions of through-drive

Flange ISO 3019-1 (SAE)			Hub for splined shaft[1]			Availability across sizes	Code
Diameter	Mounting[2]	Designation	Diameter		Designation	45	
82-2 (A)	⊷	A2	5/8 in	9T 16/32DP	S2	●	A2S2
			3/4 in	11T 16/32DP	S3	●	A2S3
101-2 (B)	⊷	B2	7/8 in	13T 16/32DP	S4	●	B2S4
			1 in	15T 16/32DP	S5	●	B2S5

● = Available ○ = On request

▼ **82-2**[3]

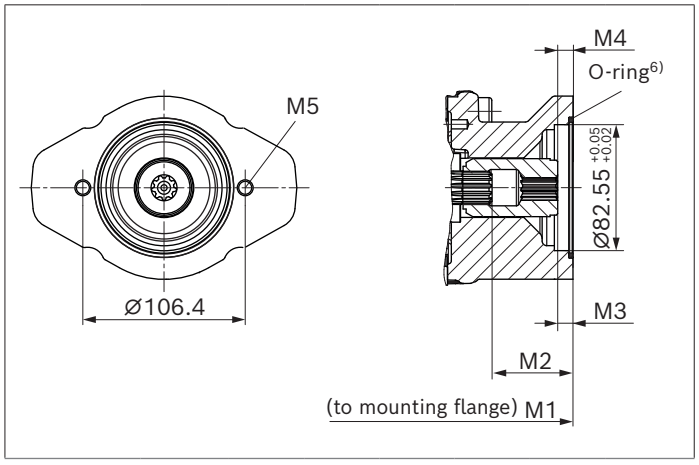

▼ **101-2**[3]

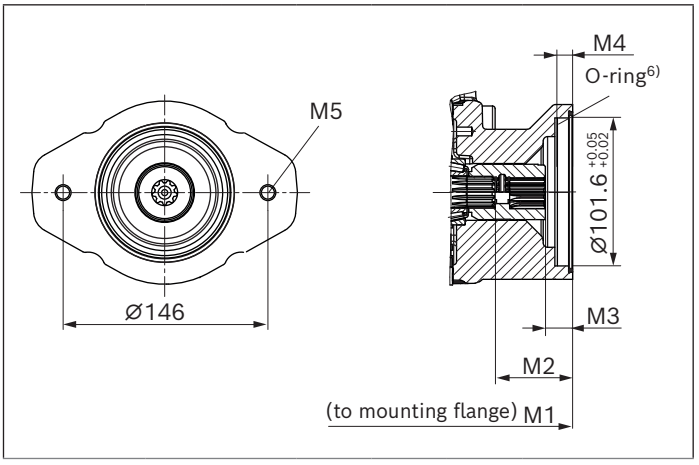

A2S2	NG	M1	M2[5]	M3[5]	M4[5]	M5[4][7]
(16-4 (A))	45	219.1	52.3	10	10	M10; 16 deep
A2S3	**NG**	**M1**	**M2**	**M3**	**M4**	**M5[4][7]**
(19-4(A-B))	45	219.1	38.4	18.1	10	M10; 16 deep

B2S4	NG	M1	M2[5]	M3[5]	M4[5]	M5[4][7]
(22-4 (B))	45	219.1	41.4	17.1	10	M12; 18 deep
B2S5	**NG**	**M1**	**M2**	**M3**	**M4**	**M5[4][7]**
25-4(B-B))	45	219.1	47.1	17.6	10	M12; 18 deep

1) According to ANSI B92.1a, 30° pressure angle, flat root, side fit, tolerance class 5
2) Mounting holes pattern viewed on through drive with control at top
3) According to SAE J744
4) Thread according to DIN 13
5) Minimum dimensions
6) O-ring included in the scope of delivery
7) Design recommended according to VDI 2230, screw quality 8.8 according to ISO 898-1

Overview of mounting options

Through drive			**Mounting options – 2nd pump**				
Flange ISO 3019-1	**Hub for splined shaft**	**Code**	**A10VO/60 NG (shaft)**	**A10VNO/5x NG (shaft)**	**A10V(S)O/5x NG (shaft)**	**A1VO/10 NG (shaft)**	**External gear pump**
82-2 (A)	5/8 in	A2S2	–	–	10, 18 (U)	–	AZPF
	3/4 in	A2S3	–	28 (S, R)	10, 18 (S, R)	18, 28 (S3)	–
101-2 (B)	7/8 in	B2S4	45 (S4)	45 (S, R)	28 (S, R)	18, 28, 35 (S4)	AZPN, AZPG
	1 in	B2S5	45 (S5)	63 (S, R)	45 (S, R)	35 (S5)	–

Combination pumps A10VO + A10VO

By using combination pumps, the user can also have independent circuits without the need for splitter gearboxes.
When ordering combination pumps the type designations for the first and the second pump must be joined by a "**+**" and are combined into one part number. Each single pump should be ordered according to type code.

Notice

- The combination pump type code is shown in shortened form in the order confirmation.
  Example:
  A10VO0045 DRS000000/60DR+
  A10VO0045 EC4000PL2/60DR
- Each through drive is plugged with a **non-pressure-resistant** cover. This means the units must be sealed with a pressure-resistant cover before commissioning.

Order example:
A10VO0045DRC000000/60DRVB2S4A2B2S4+
A10VO0045EC4000PL2/60DRVB2S4A20N000
A tandem pump, with two pumps of equal size, is permissible without additional supports, assuming that the dynamic mass acceleration does not exceed maximum 10 g (= 98.1 m/s^2).
For combination pumps consisting of more than two pumps, the mounting flange must be rated for the permissible mass torque (please contact us).

Notice

Through drives with installed hub are supplied with a spacer.
The spacer must be removed before installation of the 2nd pump and before commissioning. For information, please refer to the operating instructions 92706-01-B

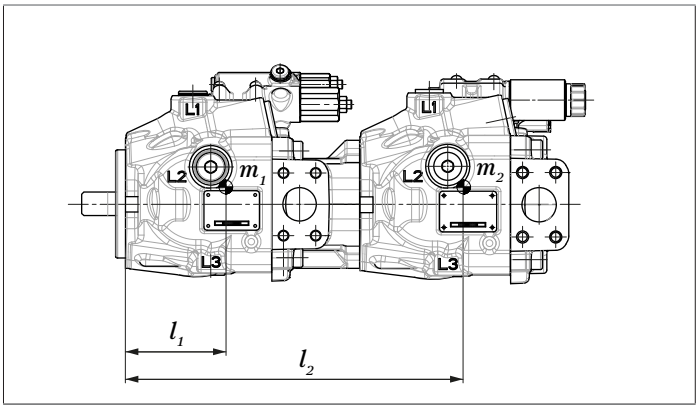

$m_1, m_2, m_3 ....$	Weight of pump	[kg]
$l_1, l_2, l_3 ...$	Distance from center of gravity	[mm]

Mass torque

$$M_m = (m_1 \times l_1 + m_2 \times l_2 + m_3 \times l_3) \times \frac{1}{102} \text{ [Nm]}$$

Weight approx.				**NG**
				45
Mounting flange	**Through drive**			
B2	Without	m	kg	17.5
	With	m	kg	20.8
Distance from center of gravity A(B)2				**45**
Mounting flange	**Through drive**			
B2	Without	l_1	mm	92
	With	l_1	mm	108
Distance from center of gravity A(B)1				**45**
Mounting flange	**Through drive**			
B2	Without	l_1	mm	90

Connector for solenoids

DEUTSCH DT04-2P-EP04
Molded, 2-pin, without bidirectional suppressor diode
The installed mating connector has the following type of protection:

- IPX7 (DIN/EN 60529) and
- IPX9K (DIN 40050-9)

▼ **Switching symbol**

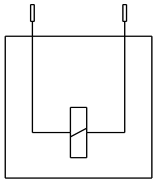

▼ **Mating connector DEUTSCH DT06-2S-EP04**

Consisting of	DT designation
1 housing	DT06-2S-EP04
1 wedge	W2S
2 sockets	0462-201-16141

The mating connector is not included in the scope of delivery.
This can be supplied by Bosch Rexroth on request (material number R902601804).

Notice

- If necessary, you can change the position of the connector by turning the solenoid body.
- The procedure is defined in the operating instructions 92706-01-B.
- Only the dead weight (<1 N) of the connection cable with a length of 150 mm may act on the plug-in connection and the solenoid coil with coil nut. Other forces and vibrations are not permissible. This can be realized e.g. by fixing the cable to the same vibration system.

Pressure sensor PR4

With the pressure sensor PR4 mounted in the port $\mathbf{M_B}$, the working pressure can be detected on the working port **B**.
Technical data, dimensions and details on the connector, plus safety instructions about the sensor can be found in the data sheet 95156.

▼ **Available variant**

Designation of PR4 sensor	PR4 480MBSE/10
Measuring range	0 to 480 bar
Output signal	SENT[1)]
Supply voltage	5 V DC
Electrical connection	Bosch Compact
Order number	R917A11816

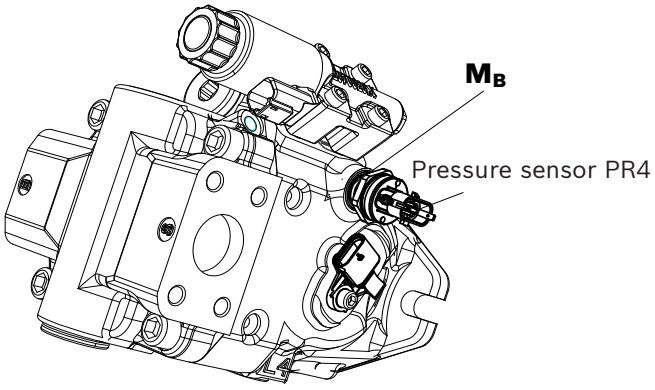

The installed mating connector has the following type of protection:

- IP67 according to ISO 20653:2013

▼ **Bosch Compact mating connector set**

Designation	Quantity	Order number
Bosch Compact 1.1a connector	1	1928403966
BDK 2.8 Contact gold-plated for 18 ... 20 AWG, 0.5 ... 1.0 mm^2	3	1928498054
Bosch Compact sleeve straight	1	1928300527
BDK 2.8 / single wire seal / Ø1.2 ... 2.1 mm / blue for insulation diameter 1.2 ... 2.1 mm	3	1928300599
End clip	1	1928403423

The mating connector is not included in the scope of delivery.
This can be supplied by Bosch Rexroth on request (material number R917009890).

1) SENT according to SAE J2716 JAN 2011

Swivel angle sensor

Description

The swivel angle sensor PAL is used for contactless detection of the swivel angle of axial piston units using a Hall effect-based sensor IC. The measured position is converted into electric signals by the redundant swivel angle sensor.

Technical data and safety instructions for the sensor are provided in the relevant data sheet 95161.

Features

- High temperature stability of the output signal
- Shock and vibration resistance
- Integrated electronic fault detection
- CE conformity

▼ **Output characteristic at pin 4, code H**

Swivel angle sensor installation left with view of the shaft; control valve top

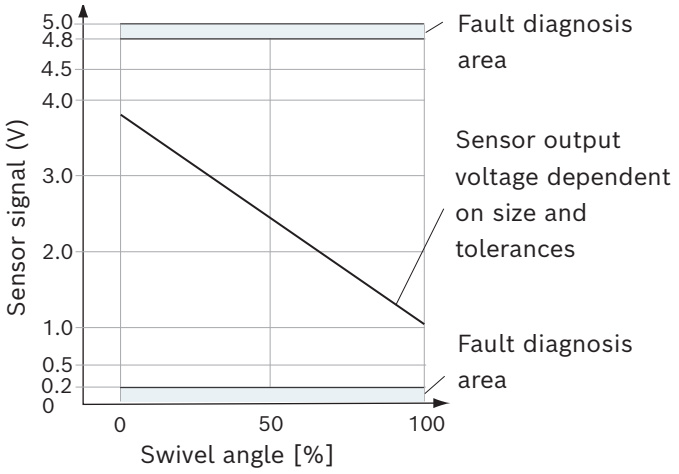

Pin assignment

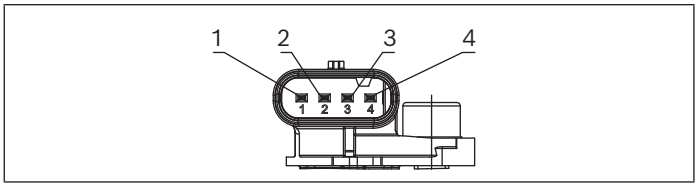

▼ **Pin assignment analog ratiometric/PWM** (order code H)
PAL 2 312A340 CM/10F
(for further information, see data sheet 95161)

Pin	Connection	
1	Sensor signal 2	PWM (active-high; 5 ... 95% on time)
2	Supply voltage	U_{supply}
3	Weight	GND
4	Sensor signal 1	analog ratiometric (10 ... 90% U_{supply})

▼ **Permissible PAL variants**

Output signal	Type	Code
Analog ratiometric/PWM	PAL 2 312A340 CM/10F	H
SENT/SENT	PAL 2 312A340 SM/10F	P

Characteristic	
Supply voltage U_{supply}	5 VDC
Maximum supply voltage range U_{supply}	4.5 ... 5.5 VDC
Overvoltage range for 48 h	28 VDC
Overvoltage range for 60 sec (τ_{amb} < 35 °C (95 °F))	37 VDC
Current consumption (I_{DD})	20 to 27 mA
Load resistance	see data sheet 95161
Reverse polarity protection (48h/60sec)	-14 VDC/-18 VDC
Operating temperature	–40 °C to +125 °C
Type of protection ISO 20653 (with plugged mating connector and cable)	IPx9k, IP6kx, IPX6, and IPX7

Notice

- Information on environmental and EMC conditions on request.
- Painting with electrostatic charging of the sensor is not permitted (danger: ESD damage)

▼ **Pin assignment SENT/SENT** (order code P)
PAL 2 312A340 SM/10F
(for further information, see data sheet 95161)

Pin	Connection	
1	Sensor signal 2	SENT format H.1 (two 12-bit fast channels)
2	Supply voltage	U_{supply}
3	Weight	GND
4	Sensor signal 1	SENT format H.4 (12 bit fast channel and single secure)

Mating connector

The mating connector is not included in the scope of delivery and can be ordered on request from Bosch Rexroth with the material number R917012863. For additional mating connector variants (for other cable diameters, among others), see data sheet 95161.

Installation instructions

General

The axial piston unit must be filled with hydraulic fluid and air bled during commissioning and operation. This must also be observed following a longer standstill as the axial piston unit may empty via the hydraulic lines.
The leakage in the housing area must be discharged to the reservoir via the highest available drain port (**L_1**, **L_2**, **L_4**).
If a shared drain line is used for several units, make sure that the respective case pressure in each unit is not exceeded. The shared drain line must be dimensioned to ensure that the maximum permissible case pressure of all connected units is not exceeded in any operating condition, particularly at cold start. If this is not possible, separate drain line must be laid.
To prevent the transmission of structure-borne noise, use elastic elements to decouple all connecting lines from all vibration-capable components (e.g. reservoir, frame parts).
Under all operating conditions, the suction lines and the drain lines must flow into the reservoir below the minimum fluid level. The permissible suction height h_S results from the total pressure loss. However, it must not be higher than $h_{S\ max}$ = 800 mm. The minimum suction pressure at port **S** must not fall below 0.8 bar absolute during operation and during cold start.
When designing the reservoir, ensure that there is adequate distance between the suction line and the drain line. We recommend using a baffle (baffle plate) between suction line and drain line. A baffle improves the air separation ability as it gives the hydraulic fluid more time for desorption. Apart from that, this prevents the heated return flow from being drawn directly back into the suction line. The suction port must be supplied with air-free, calmed and cooled hydraulic fluid.

Notice

In certain installation positions, an influence on the adjustment or control can be expected. Gravity, dead weight and case pressure can cause minor characteristic shifts and changes in actuating time.

Installation position

See the following examples **1** to **6**.
Further installation positions are available upon request.
Recommended installation position: **1** and **2**

Key	
F	Filling / Air bleeding
S	Suction port
L_1; **L_2**; L_4	Drain port
SB	Baffle (baffle plate)
$h_{t\ min}$	Minimum required immersion depth (200 mm)
h_{min}	Minimum required distance to reservoir bottom (100 mm)
$h_{ES\ min}$	Minimum height required to prevent axial piston unit from draining (25 mm)
$h_{S\ max}$	Maximum permissible suction height (800 mm)

Notice

- Port **F** is part of the external piping and must be provided on the customer side to make filling and air bleeding easier.

Below-reservoir installation (standard)

Below-reservoir installation means that the axial piston unit is installed outside of the reservoir below the minimum fluid level.

▼ **Installation position 1**

Air bleed	Filling
F	L_1 (F)

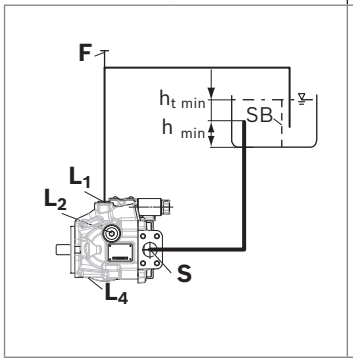

▼ **Installation position 2**

Air bleed	Filling
F	L_2 (F)

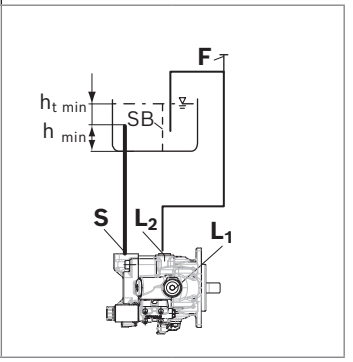

Above-reservoir installation

Above-reservoir installation means that the axial piston unit is installed above the minimum fluid level of the reservoir.

Observe the maximum permissible suction height $h_{S\ max}$ = 800 mm.

▼ **Installation position 3**

Air bleed	Filling
F	L_1 (F)

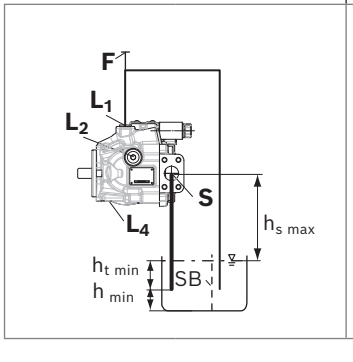

▼ **Installation position 4**

Air bleed	Filling
F	L_4 (F)

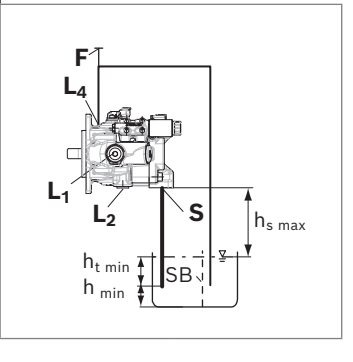

Inside-reservoir installation

Inside-reservoir installation is when the axial piston unit is installed in the reservoir below the minimum fluid level. The axial piston unit is completely below the hydraulic fluid.

If the minimum fluid level is equal to or below the upper edge of the pump, see chapter "Above-reservoir installation".

Axial piston units with electrical components (e.g. electric control, sensors) may not be installed in a reservoir below the fluid level.

Notice

- Our advice is to fit a suction pipe to the suction port **S** and to fit a pipe to case drain port **L_1**, **L_2** or **L_4**. In this case, the other drain port must be plugged. The housing of the axial piston unit is to be filled via **L_1**, **L_2** or **L_4** (see installation position 5 to 6) before the piping is fitted and the reservoir is filled with hydraulic fluid.

▼ **Installation position 5**

Air bleed	Filling
L_1	L_1

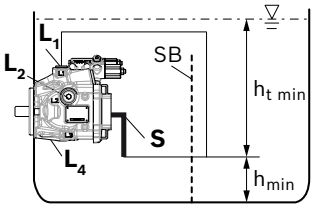

▼ **Installation position 6**

Air bleed	Filling
L_4	L_4

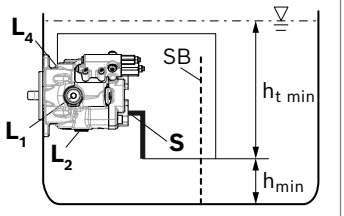

For key, see page 25

Project planning notes

- The A10VO axial piston variable pump is intended to be used in an open circuit.
- The project planning, installation and commissioning of the axial piston unit requires the involvement of skilled personnel.
- Before using the axial piston unit, please read the corresponding operating instructions completely and thoroughly. If necessary, this can be requested from Bosch Rexroth.
- Before finalizing your design, please request a binding installation drawing.
- The specified data and notes contained herein must be observed.
- Depending on the operating conditions of the axial piston unit (working pressure, fluid temperature), the characteristic curve may shift.
- The characteristic curve may also shift due to the dither frequency or control electronics.
- Preservation: Our axial piston units are supplied as standard with preservation protection for a maximum of 12 months. If longer preservation protection is required (maximum 24 months), please specify this in plain text when placing your order. The preservation periods apply under optimal storage conditions, details of which can be found in the data sheet 90312 or the operating instructions.
- Not all configuration variants of the product are approved for use in a safety function according to ISO 13849. Please consult the proper contact at Bosch Rexroth if you require reliability parameters (e.g., $MTTF_d$) for functional safety.
- Depending on the type of control used, electromagnetic effects can be produced when using solenoids. Applying a direct direct current (DC) to solenoids does not create electromagnetic interference (EMI) nor is the solenoid affected by EMI. Electromagnetic interference (EMI) potential exists when operating and controlling a solenoid with a modulated direct current signal (e.g. PWM signal). Appropriate testing and measures should be taken by the machine manufacturer to ensure other components or operators (e.g. with pacemaker) are not affected by this potential.
- Pressure control (hydraulic or electronic) is not an adequate safeguard against pressure overload. A pressure relief valve should therefore be provided in the hydraulic system. In this connection, observe the technical limits of the pressure relief valve.
- For controllers requiring external pilot pressure, sufficient control fluid must be provided to the associated ports to ensure the required pilot pressures for the respective controller function. These controllers are subject to leakage due to their design. An increase in control fluid demand has to be anticipated over the total operating time. The design of the control fluid supply must thus be sufficiently large. If the control fluid is too low, the respective controller function may be impaired and undesired system behavior may result.
- For drives that are operated for a long period of time with constant rotational speed, the natural frequency of the hydraulic system can be stimulated by the excitation frequency of the pump (rotational speed frequency x 9). This can be prevented with suitably designed hydraulic lines.
- Please note the details regarding the tightening torques of port threads and other screw connections in the instruction manual.
- The ports and fastening threads are designed for the p_{max} permissible pressures of the respective ports, see the connection tables. The machine or system manufacturer must ensure that the connecting elements and lines correspond to the specified application conditions (pressure, flow, hydraulic fluid, temperature) with the necessary safety factors.
- The service ports and function ports are only intended to accommodate hydraulic lines.

Safety instructions

- During and shortly after operation, there is a risk of getting burnt on the axial piston unit and especially on the solenoids. Take the appropriate safety measures (e.g. by wearing protective clothing).
- Moving parts in control equipment (e.g. valve spools) can, under certain circumstances, get stuck in position as a result of contamination (e.g. contaminated hydraulic fluid, abrasion, or residual dirt from components). As a result, the hydraulic fluid flow and the build-up of torque in the axial piston unit can no longer respond correctly to the operator's specifications. Even the use of various filter elements (external or internal flow filtration) will not rule out a fault but merely reduce the risk. The machine/system manufacturer must test whether remedial measures are needed on the machine for the application concerned in order to bring the driven consumer into a safe position (e.g. safe stop) and ensure any measures are properly implemented.

Related documentation

Product-specific documentation

Document type	Title	Document number
Data sheet	Hall-effect swivel angle sensor SWS series 20	95153
	Hall effect swivel angle and linear position sensor PAL series 10	95161
	BODAS PR4 pressure sensor	95156
	Application software eOC BODAS pump control	95345
	BODAS controller RC5-6 series 40	95207
	BODAS controller RC18-12 series 40, RC27-18 series 40	95208
	Storage and preservation of axial piston units	90312
Operating instructions	Axial piston variable pump A10VO series 60	92706-01-B

Documentation for hydraulic fluids

Document type	Title	Document number
Data sheet	Hydraulic fluids based on mineral oils and related hydrocarbons	90220
	Rating of hydraulic fluids used in Rexroth hydraulic components (pumps and motors)	90235
	Bosch Rexroth Fluid Rating List for Rexroth hydraulic components (pumps and motors)	90245

Bosch Rexroth AG
An den Kelterwiesen 14
72160 Horb a.N.
Germany
Phone +49 7451 92-0
sales.mobile.horb@boschrexroth.de
www.boschrexroth.com

Evolution Motion Solutions
13835 Senlac Dr, Farmers Branch, TX 75234
800-569-9801
info@**evolution**motion.com
www.**evolution**motion.com

© Bosch Rexroth AG 2023. All rights reserved, also regarding any disposal, exploitation, reproduction, editing, distribution, as well as in the event of applications for industrial property rights. The data specified within only serve to describe the product. As our products are constantly being further developed, no statements concerning a certain condition or suitability for a certain application can be derived from our information. The information given does not release the user from the obligation of own judgment and verification. It must be remembered that our products are subject to a natural process of wear and aging.