HYDAC INTERNATIONAL

Electronic Product Catalogue

EN 180.000.3/02.18

HYDAC ELECTRONIC

With roughly 9,000 employees worldwide, HYDAC is one of the leading suppliers in fluid technology, hydraulics, electronics, process technology, system technology and fluid engineering. With 50 overseas companies, and over 500 sales and service partners, HYDAC is your reliable expert partner worldwide.

The product range of HYDAC ELECTRONIC covers sensors, measurement equipment and control technology. The sensor range includes products for the measurement of pressure, temperature, distance, angle, inclination, position, level, flow rate and speed, as well as contamination and oil condition. Beyond the standard programme, products with special characteristics are supplied, such as those for applications in potentially explosive atmospheres or applications with increased functional safety requirements. Our connectivity options cover a variety of analogue and digital interfaces, such as IO-Link, CAN and HART. With its profound application expertise, HYDAC also makes for the perfect development partner for machinery.

Utilising our own sensors, controllers and displays, optimally harmonised systems can be developed and application software can be created for these systems as required.

Almost all these products are developed, manufactured and marketed by HYDAC ELECTRONIC. Suitability for the application is tested on HYDAC test rigs. With its high quality standards, HYDAC ELECTRONIC fulfils the demanding requirements for product quality.

The international HYDAC sales network provides customers with worldwide product availability, expert advice and support. An extensive service package completes our offer.

Development and manufacturing plant in Saarbrücken-Gersweiler

Slovakia

Siegert

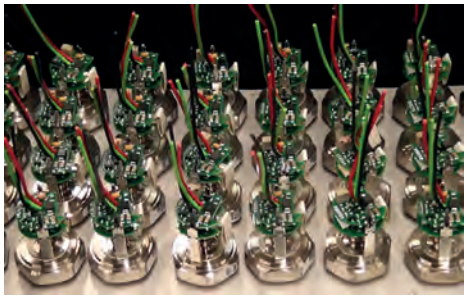
Production

Automatic function test

HYDAC Servicenter, a complete package of services

Technical advice and training

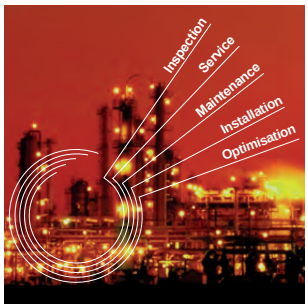

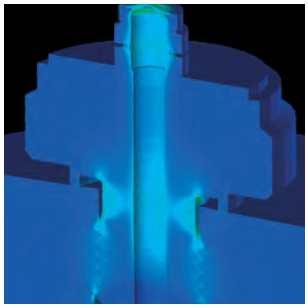
Computer simulation of a HYDAC pressure sensor

IO-Link, Industrie 4.0, functional safety

Industries and applications

There is almost no hydraulic or pneumatic medium or system that could not be monitored and controlled, quickly precisely and safely, using HYDAC measurement and control technologies.
It is not surprising, therefore, that the individually designed HYDAC measurement equipment is employed by well-known manufacturers and operators in all industries.
These applications range from analysis and diagnostics of operating fluids in the laboratory and on site to controlling complex industrial systems and miniaturised systems in construction and road vehicles.

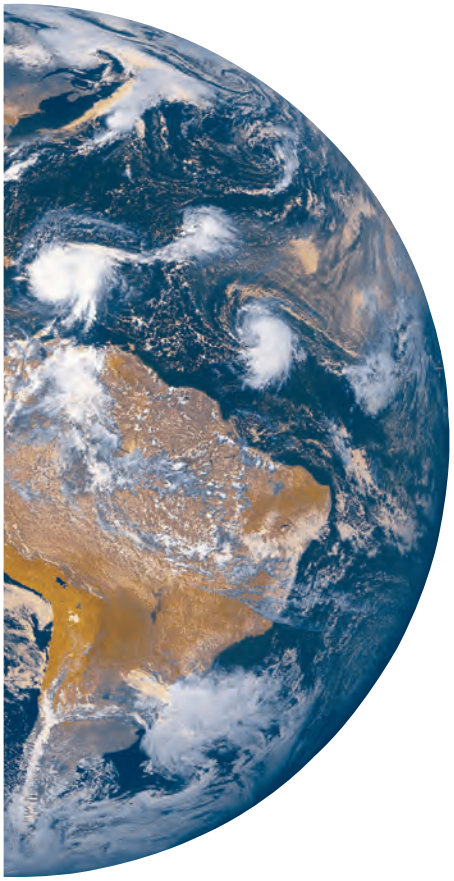

Excavators
Electronic controls and sensors
to complete the system electronics.

- Load limit control
- Electro-hydraulic load sensing
- Integrated operating data logging
- Controls of special equipment
- Cut-off devices
- Safety cut-off devices

Wheel Loaders
Electronic controls and sensors
to complete the system electronics.

- Load limit control
- Electro-hydraulic load sensing
- Integrated operating data logging
- Controls of special equipment
- Cut-off devices
- Safety cut-off devices

Road Construction Machinery
Sensor technology and system electronics to generate
modern control concepts or ready-to-install total concepts.

- Load spectra
- Condition monitoring
- Safety systems
- Load limiting
- Function controls
- Energy management

Telescopic Cranes
Sensor technology and system electronics to generate
modern control concepts
or ready-to-install total concepts.

- Load torque limiting
- Load spectra
- Load sensing
- Load limit control
- Energy management
- Condition monitoring

Municipal Machines
Sensors, system electronics
and condition monitoring.

- Working hydraulics
- Axle suspension systems
- Cab suspension systems
- Levelling systems

Tractors
Sensors, system electronics
and condition monitoring.

- Cab suspension
- Central hydraulics
- Front axle suspension
- Transmission shift control
- Level control
- Anti-roll stabilisation

Agricultural Technology
Electronic controls and sensors
to complete the system electronics.

- Load limit control
- Electro-hydraulic load sensing
- Integrated operating data logging
- Controls of special equipment
- Cut-off devices
- Safety cut-off devices

Mining
Electronic measurement technology for underground applications.

- Pump station / media supply
- Mining of raw materials
- Heading
- Material-handling and passenger transportation
- Analysis and diagnostics
- Condition monitoring

Iron - Steel - Metal
Measuring technology and electronics.

- Pump stations
- Valve stations
- Accumulator stations
- Heat exchangers
- Condition monitoring

Machine Tools
Sensors, system electronics and condition monitoring.

- Hydraulic weight counter-balance
- Hydrostatic slide bearing
- Pressure boost station
- Central processing of cooling lubricants
- Tool clamping device

Pulp and Paper Industry
Sensors, system electronics and condition monitoring.

Automotive Production
Measurement technology and condition monitoring for machine tools and presses,
Cooling lubricant supply and test rigs.

Shipping
Measuring technology, electronics and condition monitoring for:

- Engines
- Control of motion sequences
- Rudder gear/propeller
- Ballast water treatment
- Deck superstructures

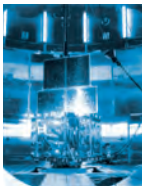

Aviation and Aerospace Industry
Sensors, system electronics and condition monitoring.

- Rocket test rigs
- Test rigs for aircraft hydraulics
- Satellite test rigs
- Flight simulators

Wind Turbines
Sensors, system electronics and condition monitoring.

- Condition monitoring of hydraulic and lubrication oils
- Measurement technology
- Safety and yaw brakes
- Pitch control
- Performance testing stations for transmission systems

Power Plant Technology
Sensors, system electronics and condition monitoring.

- Condition monitoring of hydraulic and lubrication oils
- Hydraulic drive and control systems including electronic controls

Transformers
Measuring technology, electronics and condition monitoring.

- Insulating oil conditioning
- Insulating oil monitoring
- Cooling

Oil and Gas Industry
Sensors, system electronics and condition monitoring for offshore, subsea or onshore applications.

Condition Monitoring
Data logging and interpretation providing information on the condition of machines, systems and their components.

OVERVIEW OF SECTIONS

1	PRESSURE TRANSMITTERS	1
2	PRESSURE SWITCHES	2
3	TEMPERATURE TRANSMITTERS	3
4	TEMPERATURE SWITCHES	4
5	SENSORS FOR DISTANCE AND POSITION	5
6	LEVEL SENSORS	6
7	FLOW RATE TRANSMITTERS / FLOW SWITCHES	7
8	SPEED SENSORS	8
9	ANGLE SENSORS	9
10	INCLINOMETERS	10
11	CONDITION MONITORING PRODUCTS	11
12	MEASURING INSTRUMENTS AND DISPLAY UNITS	12
13	ACCESSORIES	13

A detailed table of contents is given on the following pages.

NOTE

The information in this brochure relates to the operating conditions and applications described.

For applications or operating conditions not described, please contact the relevant technical department.

Subject to technical modifications.

HYDAC ELECTRONIC GMBH
Hauptstr. 27, 66128 Saarbrücken
Germany
Phone +49 (0)6897 509-01
Fax +49 (0)6897 509-1726
e-mail: electronic@hydac.com
Internet: www.hydac.com

EN 180.000.3/02.18

PRESSURE

PRESSURE TRANSMITTERS [1]

						Page
GENERAL APPLICATIONS						
Relative pressure						
HDA 4300						13
HDA 4400						15
HDA 4700						17
HDA 4800						19
HDA 7446						21
HDA 7400					OEM	23
HDA 8400					OEM	25
HDA 8700					OEM	27
HDA 4400	Flush membrane					29
HDA 7400	Flush membrane					31
HDA 4700	Functional safety					33
HDA 8700	Functional safety				OEM	35
HDA 4700		CAN				37
HDA 7400		CAN				41
HDA 4700		HART				43
HDA 4800	Iron and steelworks					47
Absolute pressure						
HDA 4100						49
Differential pressure						
HPT 500						51
POTENTIALLY EXPLOSIVE ATMOSPHERE						
Relative pressure						
HDA 4700			Flameproof enclosure	ATEX, IECEx, CSA		53
HDA 4300			Intrinsically safe	CSA		57
HDA 4700			Intrinsically safe	CSA		61
HDA 4300			Intrinsically safe	IECEx - Australia		65
HDA 4700			Intrinsically safe	IECEx - Australia		69
HDA 4300			Intrinsically safe	ATEX, IECEx		73
HDA 4700			Intrinsically safe	ATEX, IECEx		77
HDA 4700	redundant		Intrinsically safe	ATEX, IECEx		81
HDA 4400	Flush membrane		Flameproof enclosure	ATEX, IECEx, CSA		85
HDA 4400	Flush membrane		Intrinsically safe	ATEX, IECEx		89
HDA 4700		HART	Flameproof enclosure	ATEX, IECEx, CSA		93
HDA 4700	Junction-Box	HART	Flameproof enclosure	ATEX, IECEx, CSA		97
HDA 4400	Flush membrane	HART	Flameproof enclosure	ATEX, IECEx, CSA		101
HDA 4700		HART	Intrinsically safe	ATEX, IECEx		105
HDA 4300		HART	Intrinsically safe	ATEX, IECEx		109
HDA 4400	Flush membrane	HART	Intrinsically safe	ATEX, IECEx		113
Absolute pressure						
HDA 4100			Intrinsically safe	CSA		117
HDA 4100			Intrinsically safe	ATEX, IECEx		121
HDA 4100		HART	Intrinsically safe	ATEX, IECEx		125
HYDROGEN APPLICATIONS						
Relative pressure						
HDA 8400 H_2					OEM	129
HDA 8400 H_2				EC 79	OEM	131
HDA 4400 H_2			Intrinsically safe	ATEX, IECEx		133
HDA 4400 H_2	redundant		Intrinsically safe	ATEX, IECEx		137
SHIP						
Relative pressure						
HDA 4300						141
HDA 4400						143
HDA 4700						145
Absolute pressure						
HDA 4100						147

PRESSURE

PRESSURE SWITCHES [2]

Page

GENERAL APPLICATIONS

Relative pressure

EDS 1700	Display					151
EDS 300	Display					153
EDS 3300	Display					157
EDS 3400	Display					161
EDS 410					OEM	165
EDS 710					OEM	167
EDS 810					OEM	169
EDS 8000	Display					171
EDS 3300	Display	Flush membrane				173
EDS 3400	Display	Flush membrane				177
EDS 4300						181
EDS 4400						183
EDS 3300	Display		IO-Link			185
EDS 3400	Display		IO-Link			187
EDS 820	Display		IO-Link			189

Absolute pressure

EDS 3100	Display					191
EDS 3100	Display		IO-Link			195

POTENTIALLY EXPLOSIVE ATMOSPHERE

Relative pressure

EDS 4400				Flameproof enclosure	ATEX, IECEx, CSA	197
EDS 4400				Flameproof enclosure	ATEX, IECEx, CSA	OEM 201
EDS 4300				Intrinsically safe	ATEX	203
EDS 4300				Intrinsically safe	ATEX	OEM 207
EDS 4400				Intrinsically safe	ATEX	209
EDS 4400				Intrinsically safe	ATEX	OEM 213

Absolute pressure

EDS 4100				Intrinsically safe	ATEX	215
EDS 4100				Intrinsically safe	ATEX	OEM 219

SHIP

Relative pressure

EDS 300	Display					221

TEMPERATURE

TEMPERATURE TRANSMITTERS [3]

GENERAL APPLICATIONS

ETS 4100						225
ETS 4500						227
ETS 7000						229
HTT 8000					OEM	231
ETS 4100			CAN			233
ETS 4100			HART			235

POTENTIALLY EXPLOSIVE ATMOSPHERE

ETS 4500				Flameproof enclosure	ATEX, IECEx, CSA	239
ETS 4100			HART	Flameproof enclosure	ATEX, IECEx, CSA	243
ETS 4100	Junction-Box		HART	Flameproof enclosure	ATEX, IECEx, CSA	247
ETS 4100			HART	Intrinsically safe	ATEX, IECEx	251

TEMPERATURE SWITCHES [4]

GENERAL APPLICATIONS

ETS 1700	Display			For separ. temperature probe		257
ETS 320	Display			Pressure-resistant		259
ETS 380	Display			For separ. temperature probe		261
ETS 3200	Display			Pressure-resistant		263
ETS 3800	Display			For separ. temperature probe		267
HTS 8000					OEM	271
ETS 3200	Display		IO-Link	Pressure-resistant		273
ETS 3800	Display		IO-Link	For separ. temperature probe		275
TFP 100	Temperature probe					277

SENSORS FOR DISTANCE AND POSITION [5]

DISTANCE

					Page
CYLINDER-INTEGRATED INSTALLATION					
Magnetostrictive					
HLT 1100-R2		Analogue	Rod	for full integration	281
HLT 1100-R2		CAN	Rod	for full integration	283
HLT 2100-R1		Analogue	Rod	for partial integration	285
HLT 2100-R1		CAN	Rod	for partial integration	287
HLT 2100-R1		Profibus	Rod	for partial integration	289
HLT 2100-R1		SSI	Rod	for partial integration	291
HLT 2100-R1		EtherCAT	Rod	for partial integration	293
HLT 2150-R1		Analogue	Rod	for partial integration	295
HLT 2150-R1		CAN	Rod	for partial integration	297
HLT 2150-R1		SSI	Rod	for partial integration	299
HLT 2102/3	Double / triple redundancy	Analogue	Rod	for partial integration	301
HLT 1100-R2	Functional safety	Analogue	Rod	for full integration	303
HLT 1100-R2	Functional safety	CAN	Rod	for full integration	305
Magnetic-inductive					
HLT 724		Analogue	Rod	for full integration	307
EXTERNALLY MOUNTED					
Magnetostrictive					
HLT 2500-L2		Analogue	Profile		309
HLT 2500-L2		CAN	Profile		311
HLT 2500-L2		Profibus	Profile		313
HLT 2500-L2		SSI	Profile		315
HLT 2500-L2		EtherCAT	Profile		317
HLT 2550-L2		Analogue	Profile		319
HLT 2550-L2		CAN	Profile		321
HLT 2550-L2		SSI	Profile		323
HLT 2500-F1		Analogue	Flat housing		325
HLT 2500-F1		CAN	Flat housing		327
HLT 2500-F1		Profibus	Flat housing		329
HLT 2500-F1		SSI	Flat housing		331
HLT 2500-F1		EtherCAT	Flat housing		333
Inductive					
IWE 40				OEM	341

POSITION

Ultrasound					
HLS 528	Display				335
Magnetic					
HLS 100	Functional safety			OEM	339
Inductive					
IES 2010 / 2015 / 2020				OEM	341
IR light barrier					
HLS 200	Functional safety			OEM	341

LEVEL SENSORS [6]

LEVEL TRANSMITTERS

GENERAL APPLICATIONS					
Magnetostrictive					
HNT 1200					345
HNT 1100		CAN			347

LEVEL SWITCHES

GENERAL APPLICATIONS					
Capacitive					
ENS 3000	Display				349
ENS 3000	Display	IO-Link			353
Magnetostrictive					
HNS 3000	Display				355
HNS 3000	Display	IO-Link			359
Ultrasonic					
HNS 526	Display				361

FLOW RATE TRANSMITTERS / FLOW SWITCHES [7]

FLOW RATE AND FLOW TRANSMITTERS

					Page
GENERAL APPLICATIONS					
Turbine					
EVS 3100	Aluminium				367
EVS 3110	Stainless steel				369
Float					
HFT 2100					371
HFT 2500					375
POTENTIALLY EXPLOSIVE ATMOSPHERE					
Turbine					
HFT 3100		HART	Flameproof enclosure	ATEX, IECEx, CSA	379
HFT 3100		HART	Intrinsically safe	ATEX, IECEx	383

FLOW SWITCHES

GENERAL APPLICATIONS					
Float					
HFS 2100	Display				387
HFS 2500	Display				391
POTENTIALLY EXPLOSIVE ATMOSPHERE					
Float					
HFS 2100	Display		Intrinsically safe	ATEX	395
HFS 2500	Display		Intrinsically safe	ATEX	399

SPEED SENSORS [8]

HSS 110					405
HSS 120					407
HSS 130					409
HSS 210					411
HSS 220					413

ANGLE SENSORS [9]

HAT 1400		CAN			417
HAT 3800		CAN			419
HAT 1200	Functional safety	Analogue			421
HAT 1400	Functional safety	CAN			423
HAT 3800	Functional safety	CAN			425

INCLINOMETERS [10]

HIT 1500		CAN			429
HIT 1500	Functional safety	CAN			431

CONDITION MONITORING PRODUCTS [11]

		Page
CMU 1000	CM unit	435
CSI-B-2	CM interface module	439
AS 1000		441
AS 3000	Display	443
EY 1356		445
HLB 1400		447

MEASURING INSTRUMENTS AND DISPLAY UNITS [12]

DISPLAY UNITS

HDA 5500	451

MEASURING INSTRUMENTS (PORTABLE DATA RECORDERS)

HMG 500	453
HMG 510	455
HMG 2500	457
HMG 4000	461

ACCESSORIES [13]

SENSOR ACCESSORIES

Mounting and installation	467
Distance and position sensor accessories	472
Electrical connection	475

MEASURING INSTRUMENTS AND DISPLAY UNIT ACCESSORIES

Sensors with automatic sensor recognition	481
Further accessories for HMG 500 / 510 / 2500 / 4000	493

PROGRAMMING DEVICES AND ADAPTERS

HPG 3000, HPG P1 and ZBE P1	495

Notes:

PRESSURE

PRESSURE TRANSMITTERS [1]

						Page
GENERAL APPLICATIONS						
Relative pressure						
HDA 4300						13
HDA 4400						15
HDA 4700						17
HDA 4800						19
HDA 7446						21
HDA 7400					OEM	23
HDA 8400					OEM	25
HDA 8700					OEM	27
HDA 4400	Flush membrane					29
HDA 7400	Flush membrane					31
HDA 4700	Functional safety					33
HDA 8700	Functional safety				OEM	35
HDA 4700		CAN				37
HDA 7400		CAN				41
HDA 4700		HART				43
HDA 4800	Iron and steelworks					47
Absolute pressure						
HDA 4100						49
Differential pressure						
HPT 500						51
POTENTIALLY EXPLOSIVE ATMOSPHERE						
Relative pressure						
HDA 4700			Flameproof enclosure	ATEX, IECEx, CSA		53
HDA 4300			Intrinsically safe	CSA		57
HDA 4700			Intrinsically safe	CSA		61
HDA 4300			Intrinsically safe	IECEx - Australia		65
HDA 4700			Intrinsically safe	IECEx - Australia		69
HDA 4300			Intrinsically safe	ATEX, IECEx		73
HDA 4700			Intrinsically safe	ATEX, IECEx		77
HDA 4700	redundant		Intrinsically safe	ATEX, IECEx		81
HDA 4400	Flush membrane		Flameproof enclosure	ATEX, IECEx, CSA		85
HDA 4400	Flush membrane		Intrinsically safe	ATEX, IECEx		89
HDA 4700		HART	Flameproof enclosure	ATEX, IECEx, CSA		93
HDA 4700	Junction-Box	HART	Flameproof enclosure	ATEX, IECEx, CSA		97
HDA 4400	Flush membrane	HART	Flameproof enclosure	ATEX, IECEx, CSA		101
HDA 4700		HART	Intrinsically safe	ATEX, IECEx		105
HDA 4300		HART	Intrinsically safe	ATEX, IECEx		109
HDA 4400	Flush membrane	HART	Intrinsically safe	ATEX, IECEx		113
Absolute pressure						
HDA 4100			Intrinsically safe	CSA		117
HDA 4100			Intrinsically safe	ATEX, IECEx		121
HDA 4100		HART	Intrinsically safe	ATEX, IECEx		125
HYDROGEN APPLICATIONS						
Relative pressure						
HDA 8400 H_2					OEM	129
HDA 8400 H_2				EC 79	OEM	131
HDA 4400 H_2			Intrinsically safe	ATEX, IECEx		133
HDA 4400 H_2	redundant		Intrinsically safe	ATEX, IECEx		137
SHIP						
Relative pressure						
HDA 4300						141
HDA 4400						143
HDA 4700						145
Absolute pressure						
HDA 4100						147

Pressure Transmitter HDA 4300

Relative pressure | **Accuracy 0.5 %**

Description:

The pressure transmitter series HDA 4300 is equipped with a ceramic pressure measurement cell with thick-layer strain gauge, which was specially developed for relative pressure measurement in the low-pressure range.

The output signals 4 .. 20 mA or 0 .. 10 V allow connection of all HYDAC ELECTRONIC GMBH measurement and control devices as well as industry standard open- and closed-loop control instruments.

The main fields of application are low-pressure applications in hydraulics and pneumatics, particularly in refrigeration and air-conditioning technology and pharmaceutical industries.

Technical data:

Input data												
Measuring ranges	bar	1	2.5	4	6	10	16	25	40	-1 .. 1	-1 .. 5	-1 .. 9
Overload pressures	bar	3	8	12	20	32	50	80	120	3	20	32
Burst pressure	bar	5	12	18	30	48	75	120	180	5	30	48
Mechanical connection					G1/4 A ISO 1179-2 G1/2 B DIN-EN 837							
Tightening torque, recommended					20 Nm (G1/4); 45 Nm (G1/2)							
Parts in contact with fluid					Mech. connection: Stainless steel Sensor cell: Ceramic Seal: Copper (G1/2) / FKM / EPDM (as per model code)							
Output data												
Output signal, permitted load resistance					4 .. 20 mA, 2-conductor $R_{Lmax} = (U_B - 8\ V) / 20\ mA\ [k\Omega]$ 0 .. 10 V, 3-conductor $R_{Lmin} = 2\ k\Omega$							
Accuracy acc. to DIN 16086, terminal based					≤ ± 0.5 % FS typ. ≤ ± 1 % FS max.							
Accuracy, B.F.S.L.					≤ ± 0.25 % FS typ. ≤ ± 0.5 % FS max.							
Temperature compensation Zero point					≤ ± 0.02 % FS / °C typ. ≤ ± 0.03 % FS / °C max.							
Temperature compensation Span					≤ ± 0.02 % FS / °C typ. ≤ ± 0.03 % FS / °C max.							
Non-linearity acc. to DIN 16086, terminal based					≤ ± 0.5 % FS max.							
Hysteresis					≤ ± 0.4 % FS max.							
Repeatability					≤ ± 0.1 % FS							
Rise time					≤ 1 ms							
Long-term drift					≤ ± 0.3 % FS typ. / year							
Environmental conditions												
Compensated temperature range					-25 .. +85 °C							
Operating temperature range					-25 .. +85 °C							
Storage temperature range					-40 .. +100 °C							
Medium temperature range[1]					-40 .. +100 °C / -25 .. +100 °C							
CE mark					EN 61000-6-1 / 2 / 3 / 4							
cULus mark[2]					Certificate no.: E318391							
Vibration resistance acc. to DIN EN 60068-2-6 at 10 .. 500 Hz					≤ 20 g							
Shock resistance acc. to DIN EN 60068-2-29					≤ 100 g / 6 ms							
Protection class acc. to DIN EN 60529[3]					IP 65 (Binder 714 M18) IP 67 - M12x1 male connector - Male connector EN175301-803							
Other data												
Supply voltage when applied acc. to UL specifications					8 .. 30 V DC 2-conductor 12 .. 30 V DC 3-conductor - limited energy - acc. to 9.3 UL 61010; Class 2; UL 1310/1585; LPS UL 60950							
Residual ripple of supply voltage					≤ 5 %							
Current consumption					≤ 25 mA							
Life expectancy					> 10 million cycles, 0 .. 100 % FS							
Weight					~ 150 g							

Note: Reverse polarity protection of the supply voltage, excess voltage, override and short circuit protection are provided.
FS (**F**ull **S**cale) = relative to complete measuring range
B.F.S.L. = **B**est **F**it **S**traight **L**ine
[1] -25 °C with FKM or EPDM seal, -40 °C on request
[2] Environmental conditions acc. to 1.4.2 UL 61010-1; C22.2 No 61010-1
[3] With mounted mating connector in corresponding protection class

Model code:

HDA 4 3 X X – X – XXXX – 000 – X 1

Mechanical connection
1 = G1/2 B DIN-EN 837
4 = G1/4 A ISO 1179-2

Electrical connection
4 = male, 4 pole Binder series 714 M18 (mating connector not supplied)
5 = male, 3 pole + PE, DIN EN175301-803 (mating connector supplied)
6 = male M12x1, 4 pole (mating connector not supplied)

Output signal
A = 4 .. 20 mA, 2-conductor
B = 0 .. 10 V, 3-conductor

Measuring ranges in bar
01.0; 02.5; 04.0; 06.0; 0010; 0016; 0025; 0040
0001 (-1 .. 1); 0005 (-1 .. 5); 0009 (-1 .. 9)

Modification number
000 = standard

Sealing material (in contact with fluid)
F = FKM seal (e.g. for hydraulic oils)
E = EPDM seal (e.g. for refrigerants)

Connection material (in contact with fluid)
1 = stainless steel

Accessories:
Appropriate accessories, such as mating connectors, can be found in the Accessories brochure.

Dimensions:

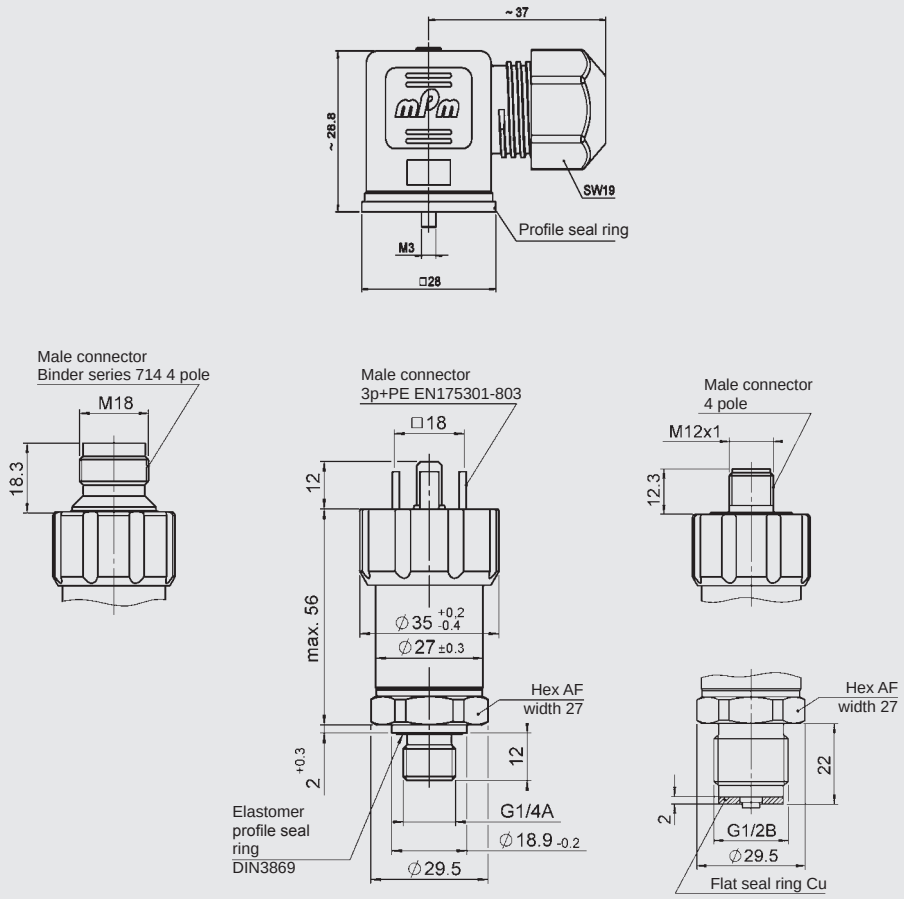

Pin connections:

Binder series 714 M18

Pin	HDA 43X4-A	HDA 43X4-B
1	n.c.	$+U_B$
2	Signal +	Signal
3	Signal -	0 V
4	n.c.	n.c.

EN175301-803

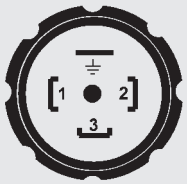

Pin	HDA 43X5-A	HDA 43X5-B
1	Signal +	$+U_B$
2	Signal -	0 V
3	n.c.	Signal
⏚	Housing	Housing

M12x1

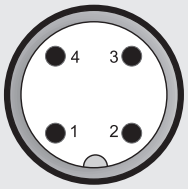

Pin	HDA 43X6-A	HDA 43X6-B
1	Signal +	$+U_B$
2	n.c.	n.c.
3	Signal -	0 V
4	n.c.	Signal

Note:

The information in this brochure relates to the operating conditions and applications described.

For applications or operating conditions not described, please contact the relevant technical department.

Subject to technical modifications.

HYDAC ELECTRONIC GMBH
Hauptstr. 27, 66128 Saarbrücken
Germany
Phone +49 (0)6897 509-01
Fax +49 (0)6897 509-1726
e-mail: electronic@hydac.com
Internet: www.hydac.com

Pressure Transmitter HDA 4400

Relative pressure | **Accuracy 0.5 %**

Description:

The pressure transmitter series HDA 4400 has a pressure measurement cell with thin-film strain gauge on a stainless steel membrane.

The output signals 4 .. 20 mA or 0 .. 10 V enable connection to all measurement and control devices of HYDAC ELECTRONIC GMBH as well as standard evaluation systems (e.g. PLC controls).

The main fields of application are in mobile or industrial hydraulics and pneumatics.

Technical data:

Input data											
Measuring ranges	bar	16	40	60	100	250	400	600	1000	1600	2000
Overload pressures	bar	32	80	120	200	500	800	1000	1600	2400	3000
Burst pressure	bar	200	200	300	500	1000	2000	2000	3000	3000	4000
Mechanical connection					G1/4 A ISO 1179-2 G1/2 B DIN EN 837						
Tightening torque, recommended					20 Nm (G1/4); 45 Nm (G1/2)						
Parts in contact with fluid					Mech. connection: Stainless steel Seal: FKM						
Output data											
Output signal, permitted load resistance					4 .. 20 mA, 2-conductor $R_{Lmax} = (U_B - 8\ V) / 20\ mA\ [k\Omega]$ 0 .. 10 V, 3-conductor $R_{Lmin} = 2\ k\Omega$						
Accuracy acc. to DIN 16086, terminal based					≤ ± 0.5 % FS typ. ≤ ± 1 % FS max.						
Accuracy, B.F.S.L.					≤ ± 0.25 % FS typ. ≤ ± 0.5 % FS max.						
Temperature compensation Zero point					≤ ± 0.015 % FS / °C typ. ≤ ± 0.025 % FS / °C max.						
Temperature compensation Span					≤ ± 0.015 % FS / °C typ. ≤ ± 0.025 % FS / °C max.						
Non-linearity acc. to DIN 16086, terminal based					≤ ± 0.3 % FS max.						
Hysteresis					≤ ± 0.4 % FS max.						
Repeatability					≤ ± 0.1 % FS						
Rise time					≤ 1 ms						
Long-term drift					≤ ± 0.3 % FS typ. / year						
Environmental conditions											
Compensated temperature range					-25 .. +85 °C						
Operating temperature range					-25 .. +85 °C						
Storage temperature range					-40 .. +100 °C						
Medium temperature range[1]					-40 .. +100 °C / -25 .. +100 °C						
CE mark					EN 61000-6-1 / 2 / 3 / 4						
cULus mark[2]					Certificate no.: E318391						
Vibration resistance acc. to DIN EN 60068-2-6 at 10 .. 500 Hz					≤ 20 g						
Shock resistance acc. to DIN EN 60068-2-29					≤ 100 g / 6 ms						
Protection class acc. to DIN EN 60529[3]					IP 65 (Binder 714 M18) IP 67 - M12x1 male connector - Male connector EN175301-803						
Other data											
Supply voltage when applied acc. to UL specifications					8 .. 30 V DC 2-conductor 12 .. 30 V DC 3-conductor - limited energy - acc. to 9.3 UL 61010; Class 2; UL 1310/1585; LPS UL 60950						
Residual ripple of supply voltage					≤ 5 %						
Current consumption					≤ 25 mA						
Life expectancy[4]					> 10 million cycles 0 .. 100 % FS						
Weight					~ 150 g						

Note: Reverse polarity protection of the supply voltage, excess voltage, override and short circuit protection are provided.
FS (**F**ull **S**cale) = relative to complete measuring range
B.F.S.L. = **B**est **F**it **S**traight **L**ine

[1] -25 °C with FKM seal, -40 °C on request
[2] Environmental conditions acc. to 1.4.2 UL 61010-1; C22.2 No 61010-1
[3] With mounted mating connector in corresponding protection class
[4] Measuring ranges ≥ 1000 bar: > 1 million cycles (0 .. 100 % FS)

Model code:

HDA 4 4 X X – X – XXX – 000

Mechanical connection
1 = G1/2 B DIN EN 837 (only for pressure ranges "1600 and 2000 bar")
4 = G1/4 A ISO 1179-2 (male)

Electrical connection
4 = male, 4 pole Binder series 714 M18 (mating connector not supplied)
5 = male, 3 pole + PE, EN175301-803 (mating connector supplied)
6 = male M12x1, 4 pole (mating connector not supplied)

Output signal
A = 4 .. 20 mA, 2-conductor
B = 0 .. 10 V, 3-conductor

Measuring ranges in bar
016; 040; 060; 100; 250; 400; 600; 1000
1600; 2000 bar (only with mech. connection code "1")

Modification number
000 = standard

Accessories:
Appropriate accessories, such as mating connectors, can be found in the Accessories brochure.

Dimensions:

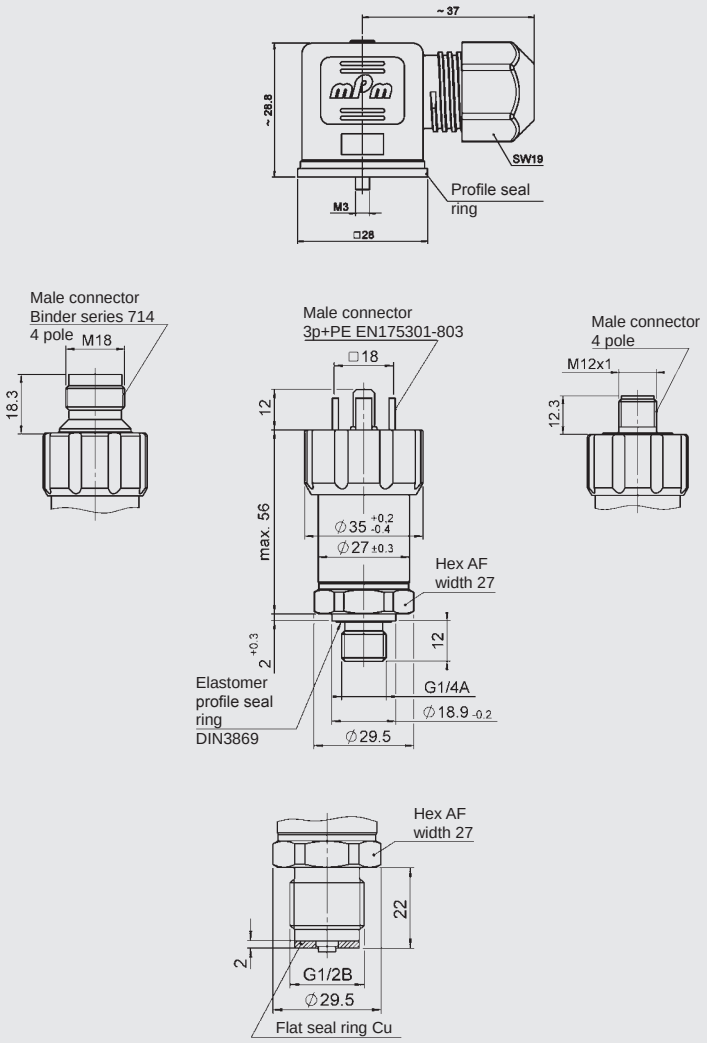

Pin connections:

Binder series 714 M18

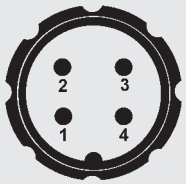

Pin	HDA 44X4-A	HDA 44X4-B
1	n.c.	$+U_B$
2	Signal +	Signal
3	Signal -	0 V
4	n.c.	n.c.

EN175301-803

Pin	HDA 44X5-A	HDA 44X5-B
1	Signal +	$+U_B$
2	Signal -	0 V
3	n.c.	Signal
⊥	Housing	Housing

M12x1

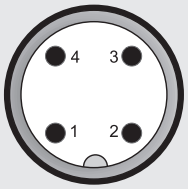

Pin	HDA 44X6-A	HDA 44X6-B
1	Signal +	$+U_B$
2	n.c.	n.c.
3	Signal -	0 V
4	n.c.	Signal

Note:

The information in this brochure relates to the operating conditions and applications described.

For applications or operating conditions not described, please contact the relevant technical department.

Subject to technical modifications.

HYDAC ELECTRONIC GMBH
Hauptstr. 27, 66128 Saarbrücken
Germany
Phone +49 (0)6897 509-01
Fax +49 (0)6897 509-1726
e-mail: electronic@hydac.com
Internet: www.hydac.com

Pressure Transmitter HDA 4700

Relative pressure | **Accuracy 0.25 %**

Description:

The pressure transmitter series HDA 4700 has a very accurate and robust sensor cell with a thin-film strain gauge on a stainless steel membrane.

The output signals 4 .. 20 mA or 0 .. 10 V enable connection to all measurement and control devices of HYDAC ELECTRONIC GMBH as well as standard evaluation systems (e.g. PLC controls).

The main fields of application are in mobile and industrial hydraulics and pneumatics.

Technical data:

Input data												
Measuring ranges	bar	6	16	40	60	100	250	400	600	1000	1600	2000
Overload pressures	bar	15	32	80	120	200	500	800	1000	1600	2400	3000
Burst pressure	bar	100	200	200	300	500	1000	2000	2000	3000	3000	4000
Mechanical connection					G1/4 A ISO 1179-2 G1/2 B DIN EN 837							
Tightening torque, recommended					20 Nm (G1/4); 45 Nm (G1/2)							
Parts in contact with fluid					Mech. connection: Stainless steel Seal: FKM							
Output data												
Output signal, permitted load resistance					4 .. 20 mA, 2-conductor $R_{Lmax} = (U_B - 8\ V) / 20\ mA\ [k\Omega]$ 0 .. 10 V, 3-conductor $R_{Lmin} = 2\ k\Omega$							
Accuracy acc. to DIN 16086, terminal based					≤ ± 0.25 % FS typ. ≤ ± 0.5 % FS max.							
Accuracy, B.F.S.L.					≤ ± 0.15 % FS typ. ≤ ± 0.25 % FS max.							
Temperature compensation Zero point					≤ ± 0.008 % FS / °C typ. ≤ ± 0.015 % FS / °C max.							
Temperature compensation Span					≤ ± 0.008 % FS / °C typ. ≤ ± 0.015 % FS / °C max.							
Non-linearity acc. to DIN 16086, terminal based					≤ ± 0.3 % FS max.							
Hysteresis					≤ ± 0.1 % FS max.							
Repeatability					≤ ± 0.05 % FS							
Rise time					≤ 1 ms							
Long-term drift					≤ ± 0.1 % FS typ. / year							
Environmental conditions												
Compensated temperature range					-25 .. +85 °C							
Operating temperature range[1]					-40 .. +85 °C / -25 .. +85 °C							
Storage temperature range					-40 .. +100 °C							
Medium temperature range[1]					-40 .. +100 °C / -25 .. +100 °C							
CE mark					EN 61000-6-1 / 2 / 3 / 4							
cULus mark[2]					Certificate no.: E318391							
Vibration resistance acc. to DIN EN 60068-2-6 at 10 .. 500 Hz					≤ 20 g							
Shock resistance acc. to DIN EN 60068-2-29					≤ 100 g / 6 ms							
Protection class acc. to DIN EN 60529[3]					IP 65 (Binder 714 M18) IP 67 - M12x1 male connector - Male connector EN175301-803							
Other data												
Supply voltage					8 .. 30 V DC 2-conductor 12 .. 30 V DC 3-conductor							
when applied acc. to UL specifications					- limited energy - acc. to 9.3 UL 61010; Class 2; UL 1310/1585; LPS UL 60950							
Residual ripple of supply voltage					≤ 5 %							
Current consumption					≤ 25 mA							
Life expectancy[4]					> 10 million cycles, 0 .. 100 % FS							
Weight					~ 150 g							

Note: Reverse polarity protection of the supply voltage, excess voltage, override and short circuit protection are provided.
FS (**F**ull **S**cale) = relative to complete measuring range
B.F.S.L. = **B**est **F**it **S**traight **L**ine

[1] -25 °C with FKM seal, -40 °C on request
[2] Environmental conditions acc. to 1.4.2 UL 61010-1; C22.2 No 61010-1
[3] With mounted mating connector in corresponding protection class
[4] Measuring ranges ≥ 1000 bar: > 1 million cycles (0 .. 100 % FS)

Model code:

HDA 4 7 X X – X – XXX – 000

Mechanical connection
1 = G1/2 B DIN EN 837
(only for pressure ranges "1600; 2000 bar")
4 = G1/4 A ISO 1179-2

Electrical connection
4 = male, 4 pole Binder series 714 M18
(mating connector not supplied)
5 = male, 3 pole + PE, EN175301-803
(mating connector supplied)
6 = male M12x1, 4 pole
(mating connector not supplied)

Output signal
A = 4 .. 20 mA, 2-conductor
B = 0 .. 10 V, 3-conductor

Measuring ranges in bar
006; 016; 040; 060; 100; 250; 400; 600; 1000
1600; 2000 bar (only with mech. connection code "1")

Modification number
000 = standard

Accessories:
Appropriate accessories, such as mating connectors, can be found in the Accessories brochure.

Dimensions:

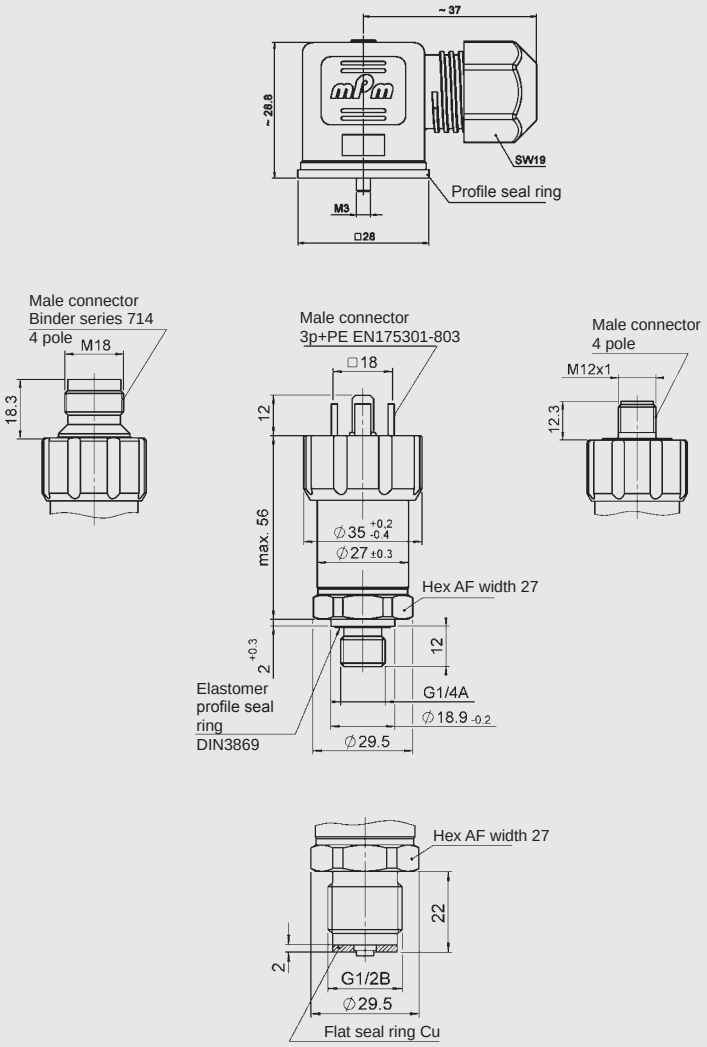

Pin connections:

Binder series 714 M18

Pin	HDA 47X4-A	HDA 47X4-B
1	n.c.	$+U_B$
2	Signal +	Signal
3	Signal -	0 V
4	n.c.	n.c.

EN175301-803

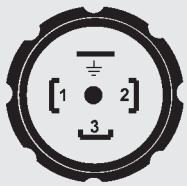

Pin	HDA 47X5-A	HDA 47X5-B
1	Signal +	$+U_B$
2	Signal -	0 V
3	n.c.	Signal
⊥	Housing	Housing

M12x1

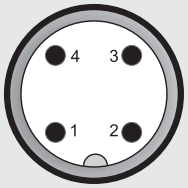

Pin	HDA 47X6-A	HDA 47X6-B
1	Signal +	$+U_B$
2	n.c.	n.c.
3	Signal -	0 V
4	n.c.	Signal

Note:

The information in this brochure relates to the operating conditions and applications described.

For applications or operating conditions not described, please contact the relevant technical department.

Subject to technical modifications.

HYDAC ELECTRONIC GMBH
Hauptstr. 27, 66128 Saarbrücken
Germany
Phone +49 (0)6897 509-01
Fax +49 (0)6897 509-1726
e-mail: electronic@hydac.com
Internet: www.hydac.com

Pressure Transmitter HDA 4800

Relative pressure | **Accuracy 0.125 %**

Description:

The pressure transmitter series HDA 4800 has a very accurate and robust sensor cell with a thin-film strain gauge on a stainless steel membrane.

Outstanding technical data and robust construction make the HDA 4800 particularly suited to the field of test rig and diagnostic technology. It is also suitable for a broad range of applications in industry.

Since the accuracy of a pressure transmitter varies greatly with the temperature of the fluid, the instrument has excellent characteristics in this respect. By default, the output signals 4 .. 20 mA, 0 .. 10 V and 0 .. 20 mA (source) are available.

Technical data:

Input data												
Measuring ranges	bar	6	16	40	60	100	250	400	600	1000	1600	2000
Overload pressures	bar	15	32	80	120	200	500	800	1000	1600	2400	3000
Burst pressure	bar	100	200	200	300	500	1000	2000	2000	3000	3000	4000

Mechanical connection	G1/4 A ISO 1179-2 G1/2 B DIN EN 837
Tightening torque, recommended	20 Nm (G1/4); 45 Nm (G1/2)
Parts in contact with fluid	Mech. connection: Stainless steel Seal: FKM
Output data	
Output signal, permitted load resistance	4 .. 20 mA, 2-conductor R_{Lmax} = (U_B - 10 V) / 20 mA [kΩ] 0 .. 10 V, 3-conductor R_{Lmin} = 2 kΩ 0 .. 20 mA, 3-conductor source R_{Lmax} = (U_B - 4 V) / 20 mA [kΩ]
Accuracy acc. to DIN 16086, terminal based	≤ ± 0.125 % FS typ. ≤ ± 0.25 % FS max.
Accuracy, B.F.S.L.	≤ ± 0.06 % FS typ. ≤ ± 0.125 % FS max.
Temperature compensation Zero point	≤ ± 0.005 % FS / °C typ. ≤ ± 0.01 % FS / °C max.
Temperature compensation Span	≤ ± 0.005 % FS / °C typ. ≤ ± 0.01 % FS / °C max.
Non-linearity acc. to DIN 16086, terminal based	≤ ± 0.15 % FS max.
Hysteresis	≤ ± 0.1 % FS max.
Repeatability	≤ ± 0.05 % FS
Rise time	≤ 1 ms
Long-term drift	≤ ± 0.1 % FS typ. / year
Environmental conditions	
Compensated temperature range	-25 .. +85 °C
Operating temperature range[1]	-40 .. +85 °C / -25 .. +85 °C
Storage temperature range	-40 .. +100 °C
Medium temperature range[1]	-40 .. +100 °C / -25 .. +100 °C
CE mark	EN 61000-6-1 / 2 / 3 / 4
c UL us mark[2]	Certificate no.: E318391
Vibration resistance acc. to DIN EN 60068-2-6 at 10 .. 500 Hz	≤ 20 g
Shock resistance acc. to DIN EN 60068-2-29	≤ 100 g / 6 ms
Protection class acc. to DIN EN 60529[3]	IP 65 (Binder 714 M18) IP 67 - M12x1 male connector - Male connector EN175301-803
Other data	
Supply voltage when applied acc. to UL specifications	10 .. 30 V DC 2-conductor 12 .. 30 V DC 3-conductor - limited energy - acc. to 9.3 UL 61010 Class 2; UL 1310/1585; LPS UL 60950
Residual ripple of supply voltage	≤ 5 %
Current consumption	≤ 25 mA
Life expectancy[4]	> 10 million cycles, 0 .. 100 % FS
Weight	~ 150 g

Note: Reverse polarity protection of the supply voltage, excess voltage, override and short circuit protection are provided.
FS (**F**ull **S**cale) = relative to complete measuring range
B.F.S.L. = **B**est **F**it **S**traight **L**ine

[1] -25 °C with FKM seal, -40 °C on request
[2] Environmental conditions acc. to 1.4.2 UL 61010-1; C22.2 No 61010-1
[3] With mounted mating connector in corresponding protection class
[4] Measuring ranges ≥ 1000 bar: > 1 million cycles (0 .. 100 % FS)

Model code:

HDA 4 8 X X – X – XXX – 000

Mechanical connection
1 = G1/2 B DIN EN 837
(only for pressure ranges "1600; 2000 bar")
4 = G1/4 A ISO 1179-2

Electrical connection
4 = male, 4 pole Binder series 714 M18
(mating connector not supplied)
5 = male, 3 pole + PE, EN175301-803
(mating connector supplied)
6 = male M12x1, 4 pole
(mating connector not supplied)

Output signal
A = 4 .. 20 mA, 2-conductor
B = 0 .. 10 V, 3-conductor
E = 0 .. 20 mA, 3-conductor (source)

Measuring ranges in bar
006, 016; 040; 060; 100; 250; 400; 600; 1000
1600; 2000 bar (only with mech. connection code "1")

Modification number
000 = standard

Accessories:
Appropriate accessories, such as mating connectors, can be found in the Accessories brochure.

Dimensions:

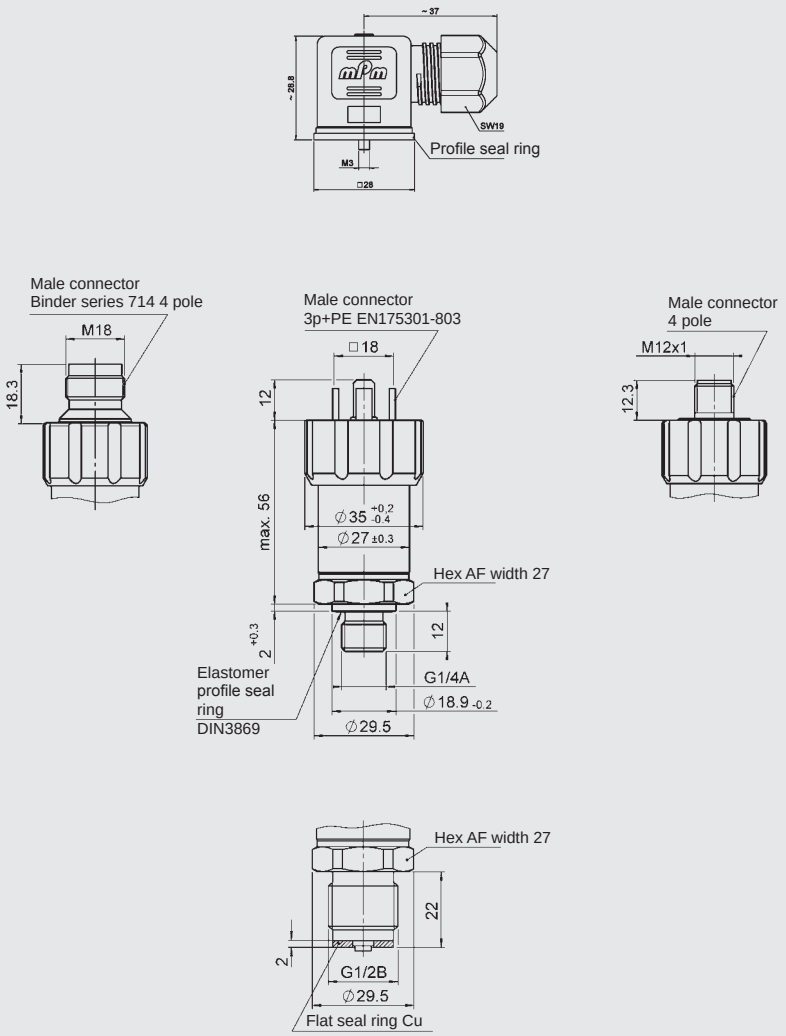

Pin connections:

Binder series 714 M18

Pin	HDA 48X4-A	HDA 48X4-B	HDA 48X4-E
1	n.c.	$+U_B$	$+U_B$
2	Signal +	Signal	Signal
3	Signal -	0 V	0 V
4	n.c.	n.c.	n.c.

EN175301-803

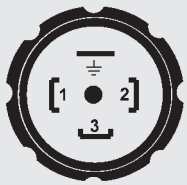

Pin	HDA 48X5-A	HDA 48X5-B	HDA 48X5-E
1	Signal +	$+U_B$	$+U_B$
2	Signal -	0 V	0 V
3	n.c.	Signal	Signal
⊥	Housing	Housing	Housing

M12x1

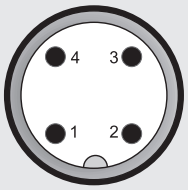

Pin	HDA 48X6-A	HDA 48X6-B	HDA 48X6-E
1	Signal +	$+U_B$	$+U_B$
2	n.c	n.c	n.c
3	Signal -	0 V	0 V
4	n.c	Signal	Signal

Note:

The information in this brochure relates to the operating conditions and applications described.

For applications or operating conditions not described, please contact the relevant technical department.

Subject to technical modifications.

HYDAC ELECTRONIC GMBH
Hauptstr. 27, 66128 Saarbrücken
Germany
Phone +49 (0)6897 509-01
Fax +49 (0)6897 509-1726
e-mail: electronic@hydac.com
Internet: www.hydac.com

Pressure Transmitter HDA 7446

Relative pressure | **Accuracy 0.5 %**

Description:

The pressure transmitter series HDA 7400 combines excellent technical data with highly compact design.

The HDA 7446 was specifically developed for OEM applications, especially for use in confined cavities. A sensor cell with a thin-film strain gauge on a stainless steel membrane is the basis for a robust, long-life pressure transmitter.

Various pressure ranges between 0 .. 40 bar and 0 .. 1000 bar provide versatility when adapting to particular applications.

For integration into controls (e.g. with PLC), the analogue output signals 4 .. 20 mA or 0 .. 10 V are available on the standard version.

Other measuring ranges and output signals can be provided on request.

Technical data:

Input data								
Measuring ranges	bar	40	60	100	250	400	600	1000
Overload pressures	bar	80	120	200	500	800	1000	1600
Burst pressure	bar	200	300	500	1000	2000	2000	3000
Mechanical connection				G1/4 A ISO 1179-2				
Tightening torque, recommended				20 Nm				
Parts in contact with fluid				Mech. connection: Stainless steel Seal: FKM				
Output data								
Output signal, permitted load resistance				4 .. 20 mA, 2-conductor $R_{Lmax} = (U_B - 8\ V) / 20\ mA\ [k\Omega]$ 0 .. 10 V, 3-conductor $R_{Lmin} = 2\ k\Omega$				
Accuracy acc. to DIN 16086, terminal based				≤ ± 0.5 % FS typ. ≤ ± 1 % FS max.				
Accuracy, B.F.S.L.				≤ ± 0.25 % FS typ. ≤ ± 0.5 % FS max.				
Temperature compensation Zero point				≤ ± 0.015 % FS / °C typ. ≤ ± 0.025 % FS / °C max.				
Temperature compensation Span				≤ ± 0.015 % FS / °C typ. ≤ ± 0.025 % FS / °C max.				
Non-linearity acc. to DIN 16086, terminal based				≤ ± 0.3 % FS max.				
Hysteresis				≤ ± 0.4 % FS max.				
Repeatability				≤ ± 0.1 % FS				
Rise time				≤ 2 ms				
Long-term drift				≤ ± 0.3 % FS typ. / year				
Environmental conditions								
Compensated temperature range				-25 .. +85 °C				
Operating temperature range[1]				-40 .. +85 °C / -25 .. +85 °C				
Storage temperature range				-40 .. +100 °C				
Medium temperature range[1]				-40 .. +100 °C / -25 .. +100 °C				
CE mark				EN 61000-6-1 / 2 / 3 / 4				
c UL us mark[2]				Certificate no.: E318391				
Vibration resistance acc. to DIN EN 60068-2-6 at 10 .. 500 Hz				≤ 20 g				
Shock resistance acc. to DIN EN 60068-2-27				≤ 100 g / 6 ms				
Protection class acc. to DIN EN 60529[3]				IP 67				
Other data								
Supply voltage				8 .. 30 V DC 2-conductor 12 .. 30 V DC 3-conductor				
when applied acc. to UL specifications				- limited energy - acc. to 9.3 UL 61010; Class 2; UL 1310/1585; LPS UL 60950				
Residual ripple of supply voltage				≤ 5 %				
Current consumption				≤ 25 mA				
Life expectancy[4]				> 10 million cycles 0 .. 100 % FS				
Weight				~ 60 g				

Note: Reverse polarity protection of the supply voltage, excess voltage, override and short circuit protection are provided.
FS (**F**ull **S**cale) = relative to complete measuring range
B.F.S.L. = **B**est **F**it **S**traight **L**ine

[1] -25 °C with FKM seal, -40 °C on request
[2] Environmental conditions acc. to 1.4.2 UL 61010-1; C22.2 No 61010-1
[3] With mounted mating connector in corresponding protection class
[4] Measuring range 1000 bar: > 1 million cycles (0 .. 100 % FS)

Model code:

HDA 7 4 4 6 – X – XXX – 000

Mechanical connection
4 = G1/4 A ISO 1179-2

Electrical connection
6 = male M12x1, 4 pole
(mating connector not supplied)

Output signal
A = 4 .. 20 mA, 2-conductor
B = 0 .. 10 V, 3-conductor

Measuring ranges in bar
040; 060; 100; 250; 400; 600; 1000

Modification number
000 = standard

Accessories:
Appropriate accessories, such as mating connectors, can be found in the Accessories brochure.

Dimensions:

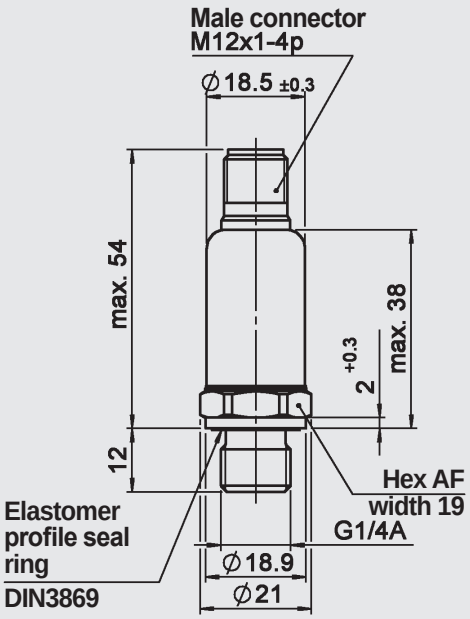

Pin connections:

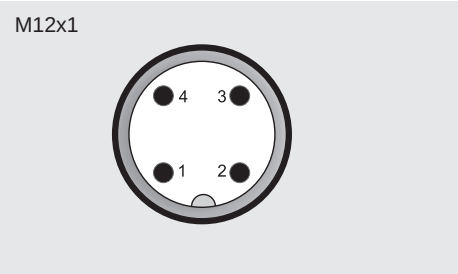

Pin	HDA 7446-A	HDA 7446-B
1	Signal +	$+U_B$
2	n.c.	n.c.
3	Signal -	0 V
4	n.c.	Signal

Note:

The information in this brochure relates to the operating conditions and applications described.

For applications or operating conditions not described, please contact the relevant technical department.

Subject to technical modifications.

HYDAC ELECTRONIC GMBH
Hauptstr. 27, 66128 Saarbrücken
Germany
Phone +49 (0)6897 509-01
Fax +49 (0)6897 509-1726
e-mail: electronic@hydac.com
Internet: www.hydac.com

Pressure Transmitter HDA 7400 for series applications

Relative pressure | **Accuracy 0.5 %**

Customised designs thanks to diverse electrical and mechanical connections and a large number of output signals

Description:

The pressure transmitter series HDA 7400 combines excellent technical data with highly compact design.

The HDA 7400 was specifically developed for OEM applications e.g. in mobile applications. A sensor cell with a thin-film strain gauge on a stainless steel membrane is the basis for a robust, long-life pressure transmitter.

Various pressure ranges between 0 .. 40 bar and 0 .. 1000 bar provide versatility when adapting to particular applications.

For integration into modern controls (e.g. with PLC), standard analogue output signals are available.

Technical data:

Input data									
Measuring ranges	bar	40	60	100	160	250	400	600	1000
Overload pressures	bar	80	120	200	320	500	800	1000	1600
Burst pressure	bar	200	300	500	800	1250	2000	2000	3000
Mechanical connection				G1/4 A ISO 1179-2					
Tightening torque, recommended				20 Nm					
Parts in contact with fluid				Mech. connection: Stainless steel Seal: FKM					
Output data									
Output signal[1]				e.g.: 4 .. 20 mA, 0 .. 5 V, 0.5 .. 4.5 V, 1 .. 6 V, 0 .. 10 V					
Accuracy acc. to DIN 16086, terminal based				≤ ± 0.5 % FS typ. ≤ ± 1 % FS max.					
Accuracy, B.F.S.L.				≤ ± 0.25 % FS typ. ≤ ± 0.5 % FS max.					
Temperature compensation Zero point / span				≤ ± 0.015 % FS / °C typ. ≤ ± 0.025 % FS / °C max.					
Non-linearity acc. to DIN 16086, terminal based				≤ ± 0.3 % FS max.					
Hysteresis				≤ ± 0.4 % FS max.					
Repeatability				≤ ± 0.1 % FS					
Rise time				≤ 2 ms					
Long-term drift				≤ ± 0.3 % FS typ. / year					
Environmental conditions									
Compensated temperature range[1]				-25 .. +85 °C					
Operating temperature range[2]				-40 .. +85 °C / -25 .. +85 °C					
Storage temperature range				-40 .. +100 °C					
Medium temperature range[2]				-40 .. +100 °C / -25 .. +100 °C					
CE mark				EN 61000-6-1 / 2 / 3 / 4					
c UL us mark[3]				Certificate no.: E318391					
Vibration resistance acc. to DIN EN 60068-2-6 at 10 .. 500 Hz				≤ 20 g					
Shock resistance acc. to DIN EN 60068-2-27				≤ 100 g / 6 ms					
Protection class acc. to DIN EN 60529				IP 65 / IP 67 (depending on electrical connection)					
Other data									
Electrical connection[1]				e.g. M12x1 (4 pole); jacketed cable					
Supply voltage when applied acc. to UL specifications				8 .. 30 V DC 2-conductor 12 .. 30 V DC 3-conductor - limited energy - acc. to 9.3 UL 61010; Class 2; UL 1310/1585; LPS UL 60950					
Residual ripple of supply voltage				≤ 5 %					
Current consumption				≤ 25 mA total					
Life expectancy[4]				> 10 million cycles, 0 .. 100 % FS					
Weight				~ 60 g					

Note: Reverse polarity protection of the supply voltage, excess voltage, override and short circuit protection are provided.
FS (**F**ull **S**cale) = relative to complete measuring range
B.F.S.L. = **B**est **F**it **S**traight **L**ine

[1] Other versions available on request
[2] -25 °C with FKM seal, -40 °C on request
[3] Environmental conditions acc. to 1.4.2 UL 61010-1; C22.2 No 61010-1
[4] Measuring range 1000 bar: ≥ 1 million cycles (0 .. 100 % FS)

Dimensions (examples):

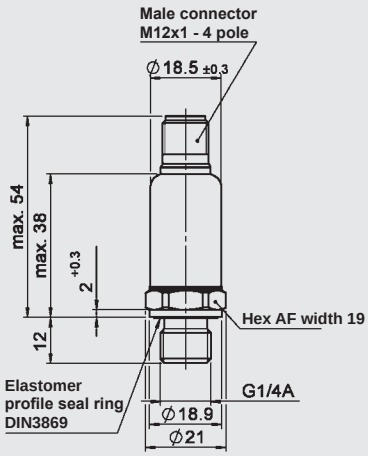

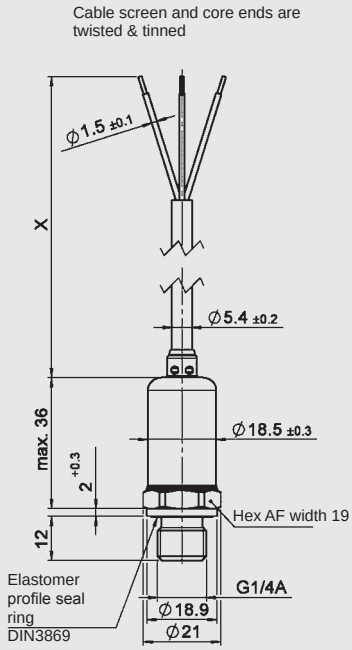

Note:

The information in this brochure relates to the operating conditions and applications described.

For applications or operating conditions not described, please contact the relevant technical department.

Subject to technical modifications.

Ordering Details:

The electronic pressure transmitter HDA 7400 has been specially developed for OEM customers and is available for minimum order quantities of 100 units per type.

For precise specifications, please contact the Sales Department of HYDAC ELECTRONIC.

HYDAC ELECTRONIC GMBH
Hauptstraße 27, 66128 Saarbrücken
Germany
Telephone +49 (0)6897 509-01
Fax +49 (0)6897 509-1726
E-mail: electronic@hydac.com
Internet: www.hydac.com

Pressure Transmitter HDA 8400 for series applications

Relative pressure | **Accuracy 0.5 %**

Customised designs thanks to diverse electrical and mechanical connections and a large number of output signals

Description:

The pressure transmitter series HDA 8400 has been specifically developed for the OEM market, e.g. in mobile applications. Like most of our pressure transmitter series, the HDA 8400 is based on a robust and long-life thin-film sensor.

All of the parts in contact with the fluid (sensor and pressure port) are made of stainless steel and are welded together with one another. This means that there are no sealing points in the interior of the sensor. The possibility of leakage is excluded.

The pressure transmitters are available in various pressure ranges from 0 .. 40 bar up to 0 .. 600 bar.
For integration into modern controls standard analogue output signals are available, e.g. 4 .. 20 mA, 0 .. 5 V, 1 .. 6 V or 0 .. 10 V. Ratiometric output signals are also available.

A variety of connection plugs integrated in the device and diverse cable solutions are available for the electrical connection.

A basic accuracy of ≤ ± 0.5% FS typical, combined with a small temperature drift, ensures a broad range of applications for the HDA 8400.

Technical data:

Input data								
Measuring ranges	bar	40	60	100	160	250	400	600
Overload pressures	bar	80	120	200	320	500	800	1000
Burst pressure	bar	200	300	500	800	1250	2000	2000
Mechanical connection				Various threads e.g.: G1/4 A ISO 1179-2 M14x1.5 SAE 6, 9/16-18 UNF 2A				
Parts in contact with fluid[1]				Mech. connection: Stainless steel Seal: FKM				
Output data								
Output signal				Various signals e.g.: 4 .. 20 mA, 0 .. 5 V, 1 .. 6 V, 0 .. 10 V, ratiometric: 0.5 .. 4.5 V for U_B = 5 V DC (10 .. 90 % U_B ± 5 %)				
Accuracy acc. to DIN 16086, terminal based				≤ ± 0.5 % FS typ. ≤ ± 1 % FS max.				
Accuracy, B.F.S.L.				≤ ± 0.25 % FS typ. ≤ ± 0.5 % FS max.				
Temperature compensation Zero point / span				≤ ± 0.015 % FS / °C typ. ≤ ± 0.025 % FS / °C max.				
Non-linearity acc. to DIN 16086, terminal based				≤ ± 0.3 % FS max.				
Hysteresis				≤ ± 0.4 % FS max.				
Repeatability				≤ ± 0.1 % FS				
Rise time				≤ 1.5 ms				
Long-term drift				≤ ± 0.3 % FS typ. / year				
Environmental conditions								
Compensated temperature range				-25 .. +85 °C				
Operating temperature range[2]				-40 .. +100 °C / -25 .. +100 °C				
Storage temperature range				-40 .. +100 °C				
Medium temperature range[2]				-40 .. +125 °C / -25 .. +125 °C				
CE mark				EN 61000-6-1 / 2 / 3 / 4				
c UL us mark[3]				Certificate no.: E318391				
E13 mark				E13*10R00*10R03*3969*01				
Vibration resistance acc. to DIN EN 60068-2-6 at 5 .. 2000 Hz				≤ 25 g				
Shock resistance acc. to DIN EN 60068-2-27				100 g / 6 ms / half-sine 500 g / 1 ms / half-sine				
Protection class acc. to DIN EN 60529 ISO 20653				IP 67 or IP 69 (depending on electr. connection) IP 6K9K				
Other data								
Electrical connection				Various male connectors e.g.: M12x1, Packard Metri Pack, Deutsch DT 04, AMP Superseal, AMP Junior Power Timer, jacketed cable				
Supply voltage when applied acc. to UL specifications				8 .. 30 V DC 12 .. 30 V DC for output signal 0 .. 10 V 5 V ± 5 % for ratiometric output signal - limited energy - acc. to 9.3 UL 61010; Class 2 UL 1310/1585; LPS UL 60950				
Residual ripple of supply voltage				≤ 5 %				
Current consumption				max. 22 mA total				
Life expectancy				> 10 million cycles, 0 .. 100 % FS				
Weight				~ 55 g				

Note: Reverse polarity protection of the supply voltage, excess voltage, override and short circuit protection are provided.
FS (**F**ull **S**cale) = relative to complete measuring range
B.F.S.L. = **B**est **F**it **S**traight **L**ine

[1] Other seal materials on request
[2] -25 °C with FKM seal, -40 °C on request
[3] Environmental conditions acc. to 1.4.2 UL 61010-1; C22.2 No 61010-1

Dimensions:

Male connector
Metri-Pack series 150
3 pole

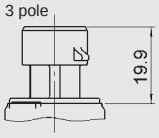

Jacketed cable

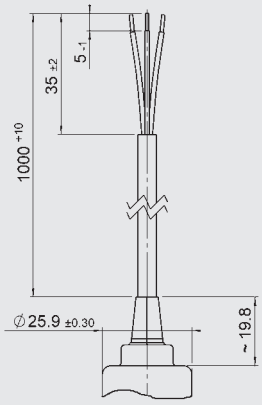

Male connector
Superseal series 1.5
3 pole

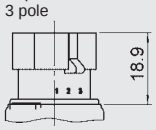

Male connector
Junior Power Timer
3 pole

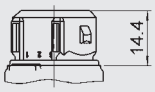

Male connector
Deutsch DT04
3 pole

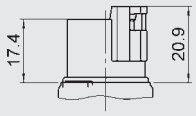

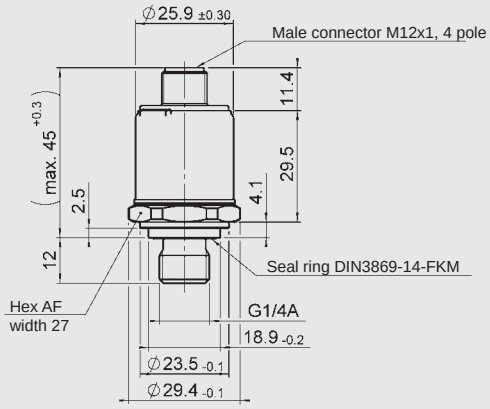

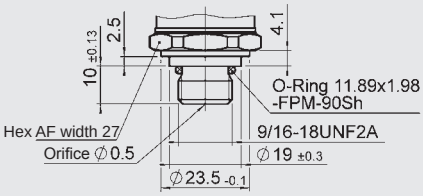

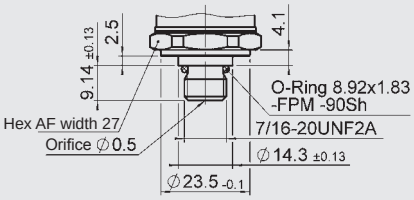

Note:

The information in this brochure relates to the operating conditions and applications described.

For applications or operating conditions not described, please contact the relevant technical department.

Subject to technical modifications.

Order details:

The electronic pressure transmitter HDA 8400 has been specially developed for OEM customers and is available for minimum order quantities of 500 units per type.

For precise specifications, please contact the Sales Department of HYDAC ELECTRONIC.

HYDAC ELECTRONIC GMBH
Hauptstraße 27, 66128 Saarbrücken
Germany
Telephone +49 (0)6897 509-01
Fax +49 (0)6897 509-1726
E-mail: electronic@hydac.com
Internet: www.hydac.com

Pressure Transmitter HDA 8700 for series applications

Relative pressure | **Accuracy 0.25 %**

Customised designs thanks to diverse electrical and mechanical connections and a large number of output signals

Description:

The pressure transmitter series HDA 8700 has been specifically developed for the OEM market, e.g. in mobile applications. Like most of our pressure transmitter series, the HDA 8700 is based on a robust and long-life thin-film sensor.

All of the parts in contact with the fluid (sensor and pressure port) are made of stainless steel and are welded together with one another. This means that there are no sealing points in the interior of the sensor. The possibility of leakage is excluded.

The pressure transmitters are available in various pressure ranges from 0 .. 40 bar up to 0 .. 600 bar. For integration into modern controls, standard analogue output signals are available, e.g. 4 .. 20 mA, 0 .. 5 V, 1 .. 6 V or 0 .. 10 V. Ratiometric output signals are also available.

A variety of connection plugs integrated in the device and diverse cable solutions are available for the electrical connection.

A basic accuracy of ≤ ± 0.25 % FS typical, combined with a small temperature drift, ensures a broad range of applications for the HDA 8700.

Technical data:

Input data								
Measuring ranges	bar	40	60	100	160	250	400	600
Overload pressures	bar	80	120	200	320	500	800	1000
Burst pressure	bar	200	300	500	800	1250	2000	2000
Mechanical connection				Various threads e.g.: G1/4 A ISO 1179-2 M14x1 5 SAE 6, 9/16-18 UNF 2A				
Parts in contact with fluid[1]				Mech. connection: Stainless steel Seal: FKM				
Output data								
Output signal				Various signals e.g.: 4 .. 20 mA, 0 .. 5 V, 1 .. 6 V, 0 .. 10 V, ratiometric: 0.5 .. 4.5 V for U_B = 5 V DC (10 .. 90 % U_B ± 5 %)				
Accuracy acc. to DIN 16086, terminal based				≤ ± 0.25 % FS typ. ≤ ± 0.5 % FS max.				
Accuracy, B.F.S.L.				≤ ± 0.15 % FS typ. ≤ ± 0.25 % FS max.				
Temperature compensation Zero point / span				≤ ± 0.01 % FS / °C typ. ≤ ± 0.02 % FS / °C max.				
Non-linearity acc. to DIN 16086, terminal based				≤ ± 0.3 % FS max.				
Hysteresis				≤ ± 0.1 % FS max.				
Repeatability				≤ ± 0.1 % FS				
Rise time				≤ 1.5 ms				
Long-term drift				≤ ± 0.3 % FS typ. / year				
Environmental conditions								
Compensated temperature range				-25 .. +85 °C				
Operating temperature range[2]				-40 .. +100 °C / -25 .. +100 °C				
Storage temperature range				-40 .. +100 °C				
Medium temperature range[2]				-40 .. +125 °C / -25 .. +125 °C				
CE mark				EN 61000-6-1 / 2 / 3 / 4				
c UL us mark[3]				Certificate no.: E318391				
E13 mark				E13*10R00*10R03*3969*01				
Vibration resistance acc. to DIN EN 60068-2-6 at 5 .. 2000 Hz				≤ 25 g				
Shock resistance acc. to DIN EN 60068-2-27				100 g / 6 ms / half-sine 500 g / 1 ms / half-sine				
Protection class acc. to DIN EN 60529 ISO 20653				IP 65, 67 or 69 (depending on electr. connection) IP 6K9K				
Other data								
Electrical connection				Various male connectors e.g.: M12x1, Packard Metri Pack, Deutsch DT 04, AMP Superseal, AMP Junior Power Timer, jacketed cable				
Supply voltage when applied acc. to UL specifications				8 .. 30 V DC 12 .. 30 V DC for output signal 0 .. 10 V 5 V ± 5 % for ratiometric output signal - limited energy - acc. to 9.3 UL 61010; Class 2; UL 1310/1585; LPS UL 60950				
Residual ripple of supply voltage				≤ 5 %				
Current consumption				max. 22 mA total				
Life expectancy				> 10 million cycles, 0 .. 100 % FS				
Weight				~ 55 g				

Note: Reverse polarity protection of the supply voltage, excess voltage, override and short circuit protection are provided.
FS (**F**ull **S**cale) = relative to complete measuring range,
B.F.S.L. = **B**est **F**it **S**traight **L**ine

[1] Other seal materials on request
[2] -25 °C with FKM seal, -40 °C on request
[3] Environmental conditions acc. to 1.4.2 UL 61010-1; C22.2 No 61010-1

Dimensions:

Male connector
Metri-Pack series 150
3 pole

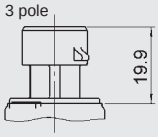

Jacketed cable

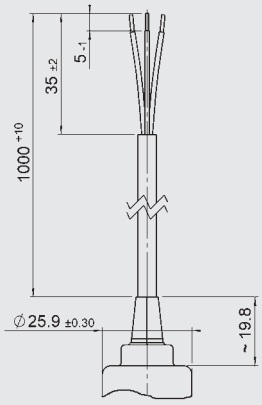

Male connector
Superseal series 1.5
3 pole

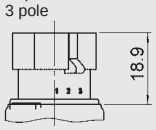

Male connector
Junior Power Timer
3 pole

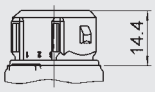

Male connector
Deutsch DT04
3 pole

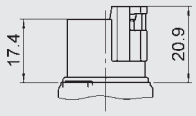

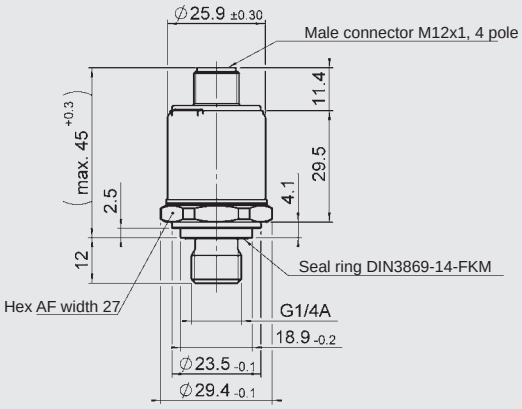

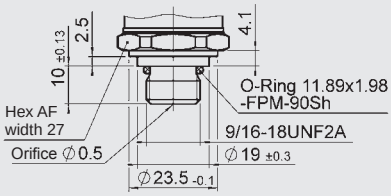

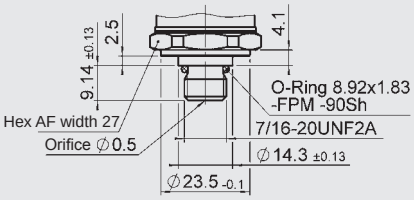

Note:

The information in this brochure relates to the operating conditions and applications described.

For applications or operating conditions not described, please contact the relevant technical department.

Subject to technical modifications.

Order details:

The electronic pressure transmitter HDA 8700 has been specially developed for OEM customers and is available for minimum order quantities of 500 units per type.

For precise specifications, please contact the Sales Department of HYDAC ELECTRONIC.

HYDAC ELECTRONIC GMBH
Hauptstraße 27, 66128 Saarbrücken
Germany
Telephone +49 (0)6897 509-01
Fax +49 (0)6897 509-1726
E-mail: electronic@hydac.com
Internet: www.hydac.com

Pressure Transmitter HDA 4400

Relative pressure | **Accuracy 0.5 %**

Flush membrane

Description:

Pressure Transmitter HDA 4400 with a flush membrane was designed specifically for applications in which a standard pressure port could become blocked, clogged or frozen by the particular medium used. Further applications include processes where the medium changes regularly and any residues could cause mixing or contamination of the media.

Like the standard model, the HDA 4400 with flush membrane has a pressure measurement cell with a thin-film strain gauge on a stainless steel membrane for relative pressure measurement in the high pressure range.

The pressure port is achieved with a fully-sealed stainless steel front membrane filled internally with a pressure transfer fluid. The process pressure is transmitted hydrostatically to the measurement cell via the pressure transfer fluid.

The 4 .. 20 mA or 0 .. 10 V output signals permit connection to all HYDAC measuring and control devices, as well as connection to standard evaluation systems (e.g. PLC controls).

Technical data:

Input data													
Measuring ranges	bar	2.5	4	6	10	16	25	40	100	250	400	600	-1 .. 3
Overload pressures	bar	8	8	12	20	32	50	80	200	500	800	1000	8
Burst pressure [1]	bar	20	20	30	50	80	125	200	500	1000	2000	2000	20
Mechanical connection					G1/2 A ISO 1179-2 G1/4 A ISO 1179-2 G1/2 with additional front O-ring seal G1/4 with additional front O-ring seal G1/2 with add. front O-ring seal and cooling body								
Pressure transfer fluid					Silicone-free oil								
Tightening torque, recommended					45 Nm for G1/2, G1/2 A 20 Nm for G1/4								
Parts in contact with fluid [2]					Mech. connection: Stainless steel Seal: FKM O-ring: FKM								
Output data													
Output signal, permitted load resistance					4 .. 20 mA, 2-conductor; $R_{Lmax.} = (U_B - 8\ V) / 20\ mA\ [k\Omega]$ 0 .. 10 V, 3-conductor; $R_{Lmin.} = 2\ k\Omega$								
Accuracy acc. to DIN 16086, terminal based					≤ ± 0.5 % FS typ. ≤ ± 1 % FS max.								
Accuracy, B.F.S.L.					≤ ± 0.25 % FS typ. ≤ ± 0.5 % FS max.								
Temperature compensation Zero point					≤ ± 0.015 % FS / °C typ. ≤ ± 0.025 % FS / °C max.								
Temperature compensation Span					≤ ± 0.015 % FS / °C typ. ≤ ± 0.025 % FS / °C max.								
Non-linearity acc. to DIN 16086, terminal based					≤ ± 0.3 % FS max.								
Hysteresis					≤ ± 0.4 % FS max.								
Repeatability					≤ ± 0.1 % FS max.								
Rise time					≤ 1 ms								
Long-term drift					≤ ± 0.3 % FS / year typ.								
Environmental conditions													
Compensated temperature range					-25 .. +85 °C								
Operating temperature range					-25 .. +85 °C								
Storage temperature range					-40 .. +100 °C								
Fluid temperature range [3]					-30 .. +100 °C / -25 .. +100 °C -30 .. +150 °C / -25 .. +150 °C for G1/2 with cooling section								
CE mark					EN 61000-6-1 / 2 / 3 / 4								
c UL us mark [4]					Certificate no.: E318391								
Vibration resistance acc. to DIN EN 60068-2-6 at 10 .. 500 Hz					≤ 20 g								
Protection class acc. to DIN EN 60529 [5]					IP 65 (male connector EN175301-803) IP 67 (M12x1 male connector)								
Other data													
Supply voltage					8 .. 30 V DC 2-conductor 12 .. 30 V DC 3-conductor								
when applied acc. to UL specifications					- limited energy - acc. to 9.3 UL 61010; Class 2; UL 1310/1585; LPS UL 60950								
Residual ripple of supply voltage					≤ 5 %								
Current consumption					≤ 25 mA								
Life expectancy					> 10 million cycles (0 .. 100 % FS)								
Weight					~ 150 g								

Note: Reverse polarity protection of the supply voltage, excess voltage, override and short circuit protection are provided.
FS (**F**ull **S**cale) = relative to complete measuring range, **B.F.S.L.** = **B**est **F**it **S**traight **L**ine

[1] For G1/2 with additional front O-ring seal max. 1500 bar
[2] Other seal materials on request
[3] -25 °C with FKM seal, -30 °C on request
[4] Environmental conditions acc. to 1.4.2 UL 61010-1; C22.2 No. 61010-1
[5] With mounted mating connector in corresponding protection class

Model code:

HDA 4 4 Z X – X – XXXX – XXX – 000

Mechanical process connection
Z = flush membrane

Electrical connection
5 = male, EN175301-803, 3 pole + PE
(mating connector supplied)
6 = male M12x1, 4 pole
(mating connector not supplied)

Output signal
A = 4 .. 20 mA, 2-conductor
B = 0 .. 10 V, 3 conductor

Measuring ranges in bar
02.5; 0004; 0006; 0010; 0016; 0025; 0040; 0100; 0250; 0400; 0600; -1 .. 3

Mechanical connection
G01 = G1/2 A, ISO 1179-2
G02 = G1/2 with additional front O-ring seal
G04 = G1/4 with additional front O-ring seal (only for measuring ranges ≥ 40 bar)
G05 = G1/4 A ISO 1179-2 (only for measuring ranges ≥ 40 bar)
G12 = G1/2 with additional front O-ring seal and cooling section

Modification number
000 = standard

Accessories:
Appropriate accessories, such as mating connectors, can be found in the Accessories brochure.

Dimensions:

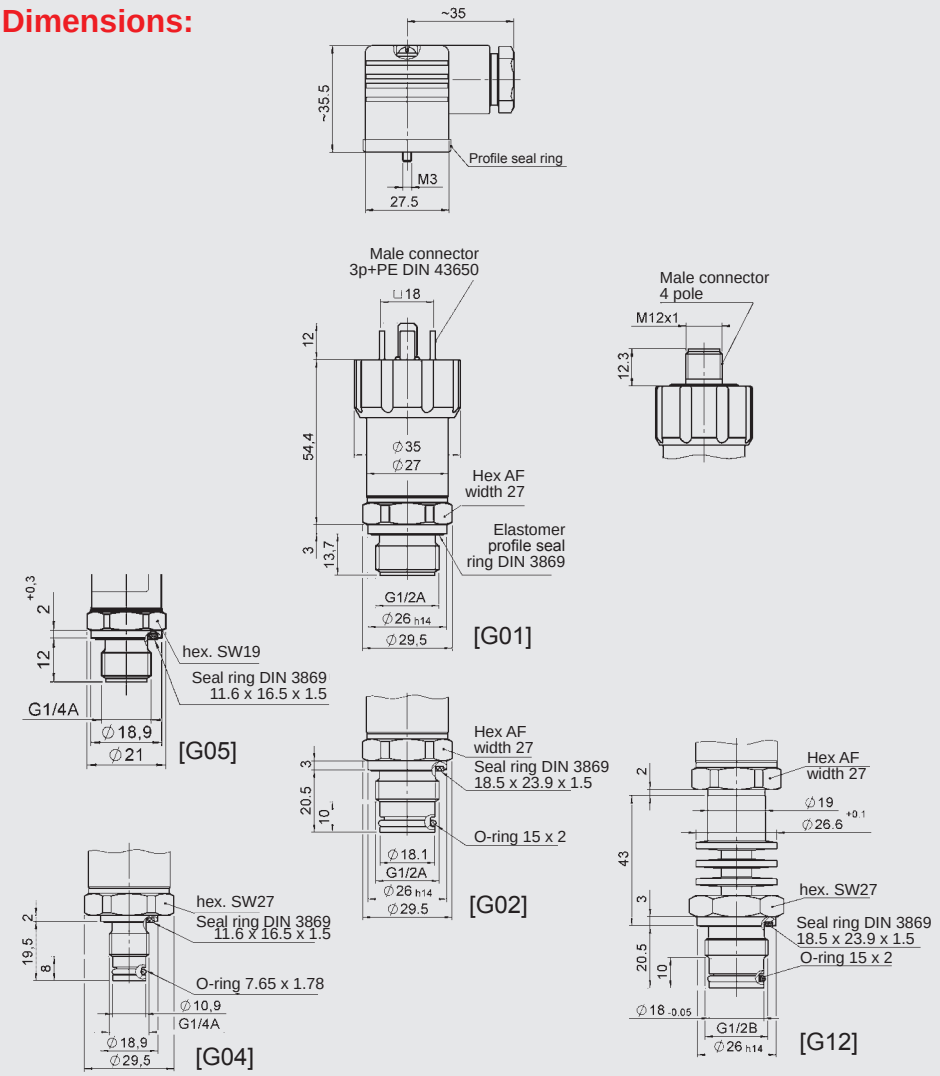

Pin connections:

EN175301-803

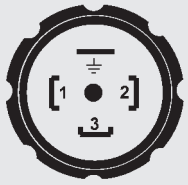

Pin	HDA 44Z5-A	HDA 44Z5-B
1	Signal +	$+U_B$
2	Signal -	0 V
3	n.c.	Signal
^	Housing	Housing

M12x1

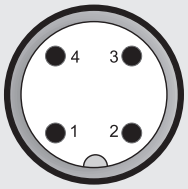

Pin	HDA 44Z6-A	HDA 44Z6-B
1	Signal +	+UB
2	n.c.	n.c.
3	Signal -	0 V
4	n.c.	Signal

Note:

The information in this brochure relates to the operating conditions and applications described.

For applications or operating conditions not described, please contact the relevant technical department.

Subject to technical modifications.

HYDAC ELECTRONIC GMBH
Hauptstr. 27, 66128 Saarbrücken
Germany
Phone +49 (0)6897 509-01
Fax +49 (0)6897 509-1726
e-mail: electronic@hydac.com
Internet: www.hydac.com

Pressure Transmitter HDA 7400

Relative pressure | **Accuracy 0.5 %**

Flush membrane

Description:

Pressure Transmitter HDA 7400 with a flush membrane was designed specifically for applications in which a standard pressure port could become blocked, clogged or frozen by the particular medium used. Further applications include processes where the medium changes regularly and any residues could cause mixing or contamination of the media.

Like the standard model, the HDA 7400 with flush membrane has a pressure measurement cell with a thin-film strain gauge on a stainless steel membrane for relative pressure measurement in the high pressure range.

The pressure port is achieved with a fully-sealed stainless steel front membrane filled internally with a pressure transfer fluid. The process pressure is transmitted hydrostatically to the measurement cell via the pressure transfer fluid.

The output signals 4 .. 20 mA or 0 .. 10 V permit connection to all HYDAC measuring and control devices, as well as connection to standard evaluation systems (e.g. PLC controls).

Technical data:

Input data						
Measuring ranges	bar	40	100	250	400	600
Overload pressure	bar	80	200	500	800	1000
Burst pressure	bar	200	500	1000	2000	2000
Mechanical connection			G1/4 A ISO 1179-2 G1/4 with additional front O-ring seal			
Pressure transfer fluid			Silicone-free oil			
Tightening torque, recommended			20 Nm			
Parts in contact with fluid [1]			Mech. connection: Stainless steel Seal: FKM O-ring: FKM			
Output data						
Output signals, permitted load resistance			4 .. 20 mA, 2-conductor $R_{Lmax} = (U_B – 8 V) / 20 mA [kΩ]$ 0 .. 10 V, 3-conductor $R_{Lmin} = 2 kΩ$			
Accuracy acc. to DIN 16086, terminal based			≤ ± 0.5 % FS typ. ≤ ± 1.0 % FS max.			
Accuracy, B.F.S.L.			≤ ± 0.25 % FS typ. ≤ ± 0.5 % FS max.			
Temperature compensation Zero point			≤ ± 0.015 % FS / °C typ. ≤ ± 0.025 % FS / °C max.			
Temperature compensation Span			≤ ± 0.015 % FS / °C typ. ≤ ± 0.025 % FS / °C max.			
Non-linearity acc. to DIN 16086, terminal based			≤ ± 0.3 % FS max.			
Hysteresis			≤ ± 0.4 % FS max.			
Repeatability			≤ ± 0.1 % FS max.			
Rise time			≤ 2 ms			
Long-term drift			≤ ± 0.3 % FS / year typ.			
Environmental conditions						
Compensated temperature range			-25 .. +85 °C			
Operating temperature range			-25 .. +85 °C			
Storage temperature range			-40 .. +100 °C			
Fluid temperature range [2]			-30 .. +100 °C / -25 .. +100 °C			
CE mark			EN 61000-6-1 / 2 / 3 / 4			
cULus mark [3]			Certificate-No.: E318391			
Vibration resistance acc. to DIN EN 60068-2-6 at 10 .. 500 Hz			≤ 20 g			
Protection class acc. to DIN EN 60529 [4]			IP 67			
Other data						
Supply voltage			8 .. 30 V DC 2-conductor 12 .. 30 V DC 3-conductor			
when applied acc. to UL specifications			– limited energy – acc. to 9.3 UL 61010; Class 2; UL 1310/1585; LPS UL 60950			
Residual ripple of supply voltage			≤ 5 %			
Current consumption			≤ 25 mA			
Life expectancy			> 10 million cycles (0 .. 100 % FS)			
Weight			~ 80 g			

Note: Reverse polarity protection of the supply voltage, excess voltage, override and short circuit protection are provided.
FS (**F**ull **S**cale) = relative to complete measuring range
B.F.S.L. = **B**est **F**it **S**traight **L**ine

[1] Other seal materials on request
[2] -25 °C with FKM seal, -30 °C on request
[3] Environmental conditions acc. to 1.4.2 UL 61010-1; C22.2 No. 61010-1
[4] With mounted mating connector in corresponding protection class

Model code:

HDA 7 4 Z 6 – X – XXXX – XXX – 000

Mechanical process connection
Z = flush membrane

Electrical connection
6 = male M12x1, 4 pole
(mating connector not supplied)

Output signal
A = 4 .. 20 mA, 2-conductor
B = 0 .. 10 V, 3-conductor

Measuring ranges in bar
0040; 0100; 0250; 0400; 0600

Mechanical connection
G04 = G1/4 with additional front O-ring seal
G05 = G1/4 A DIN 3852

Modification number
000 = standard

Accessories:
Appropriate accessories, such as mating connectors, can be found in the Accessories brochure.

Dimensions:

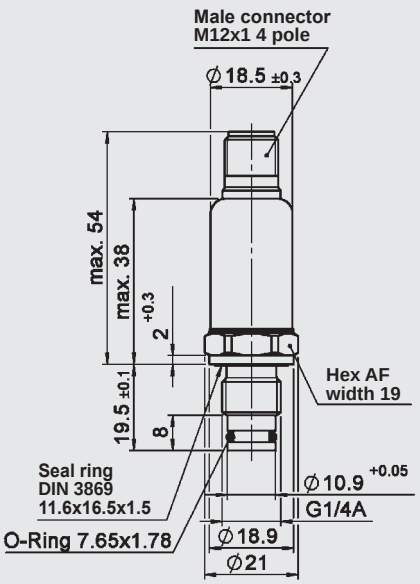

[G04]

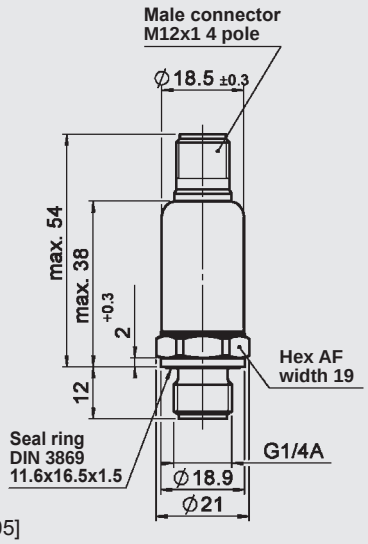

[G05]

Pin connections:

M12x1

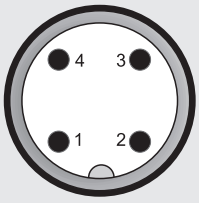

Pin	HDA 74Z6-A	HDA 74Z6-B
1	Signal +	$+U_B$
2	n.c.	n.c.
3	Signal -	0 V
4	n.c.	Signal

Note:

The information in this brochure relates to the operating conditions and applications described.

For applications or operating conditions not described, please contact the relevant technical department.

Subject to technical modifications.

HYDAC ELECTRONIC GMBH
Hauptstr. 27, 66128 Saarbrücken
Germany
Phone +49 (0)6897 509-01
Fax +49 (0)6897 509-1726
e-mail: electronic@hydac.com
Internet: www.hydac.com

Pressure Transmitter HDA 4700

Relative pressure | **Accuracy 0.25 %**

Functional Safety PL d, Cat 3

Increased Functional Safety

Description:

This version of the pressure transmitter series HDA 4700 has been specially developed for use in safety circuits / safety functions as part of the functional safety of machinery and equipment up to PL d - Cat 3 (in accordance with ISO 13849).

The pressure transmitters are designed with two channels. Each channel consists of a sensor element and evaluation electronics. As a result, the pressure transmitter develops two separate and independent output signals in proportion to the pressure.

The safety function is tested by evaluating and comparing the two analogue output signals in a higher-level system.

The main fields of application are as sensor elements in mobile, safety-oriented systems such as load torque displays, load torque limitation in truck-mounted cranes or working platforms and much more.

Technical data:

Input data									
Measuring ranges signal 1	bar	25	40	60	100	160	250	400	600
Measuring ranges signal 2	bar	25/40	40/60	60/100	100/160	160/250	250/400	400/600	600/1000
Overload pressures	bar	80	80	120	200	320	500	800	1200
Burst pressure	bar	200	200	300	500	800	1250	2000	2000

Mechanical connection	G¼ A ISO 1179-2 with 0.5 mm orifice
Tightening torque, recommended	20 Nm
Parts in contact with fluid [1]	Mech. connection: Stainless steel (2 x thin-film strain gauge) Seal: FKM
Output data	
Output signal 1 [2] Output signal 2 [2]	4 .. 20 mA, 3-conductor 4 .. 20 mA, 3-conductor
Accuracy acc. to DIN 16086, terminal based	≤ ± 0.25 % FS typ. ≤ ± 0.5 % FS max.
Accuracy, B.F.S.L.	≤ ± 0.15 % FS typ. ≤ ± 0.25 % FS max.
Temperature compensation Zero point	≤ ± 0.008 % FS / °C typ. ≤ ± 0.015 % FS / °C max.
Temperature compensation Span	≤ ± 0.008 % FS / °C typ. ≤ ± 0.015 % FS / °C max.
Non-linearity acc. to DIN 16086, terminal based	≤ ± 0.3 % FS max.
Hysteresis	≤ ± 0.1 % FS max.
Repeatability	≤ ± 0.05 % FS
Rise time	≤ 2 ms
Long-term stability	≤ ± 0.1 % FS typ. / year
Environmental conditions	
Compensated temperature range	-25 .. +85 °C
Operating temperature range (fail safe) [3]	-40 .. +85 °C / -25 .. +85 °C
Storage temperature range	-40 .. +85 °C
Medium temperature range[3]	-40 .. +85 °C / -25 .. +85 °C
CE- mark	EN 61000-6-1 / 2 / 3 / 4
Vibration resistance acc. to DIN EN 60068-2-6 at 5 .. 2000 Hz	≤ 20 g
Shock resistance acc. to DIN EN 60068-2-27	≤ 100 g / 6 ms
Protection class [4] acc. to DIN EN 60529 ISO 20653	IP 67 / IP 69 (with attached mating connector) IP 6K9K
Safety-related data	
Performance level	
Based on	DIN EN ISO 13849-1:2008
PL	d
Architecture	Category 3
Other data	
Supply voltage	7 .. 35 V DC (max. load resistance 250 Ω) 12 .. 35 V DC (max. load resistance 500 Ω)
Residual ripple of supply voltage	≤ 5 %
Current consumption	≤ 50 mA
Life expectancy	> 10 million cycles, 0 .. 100 % FS
Weight	~ 180 g

Note: Reverse polarity protection of the supply voltage, excess voltage, override and short circuit protection are provided.
FS (**F**ull **S**cale) = relative to complete measuring range
B.F.S.L. = **B**est **F**it **S**traight **L**ine

[1] Other seal materials on request
[2] Other output signals on request
[3] -25 °C with FKM seal, -40 °C on request
[4] With mounted mating connector in corresponding protection class

Dimensions:

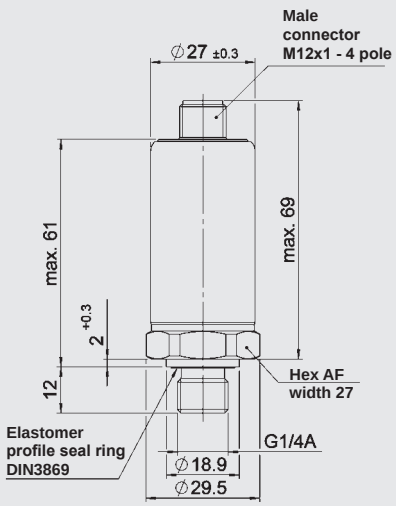

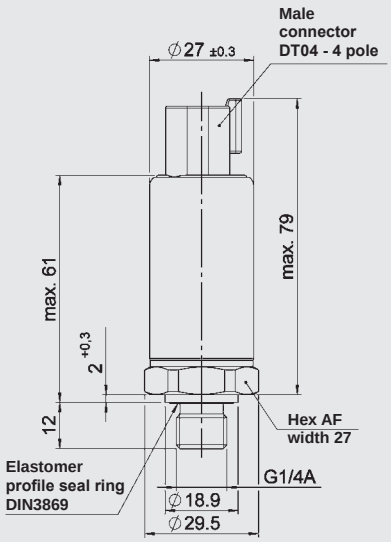

Pin connections:

M12x1

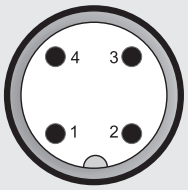

Pin	HDA 4746-CC
1	$+U_B$
2	Signal 2
3	0 V
4	Signal 1

DT04

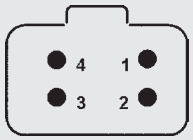

Pin	HDA 474V-CC
1	$+U_B$
2	0 V
3	Signal 2
4	Signal 1

Block circuit diagram:

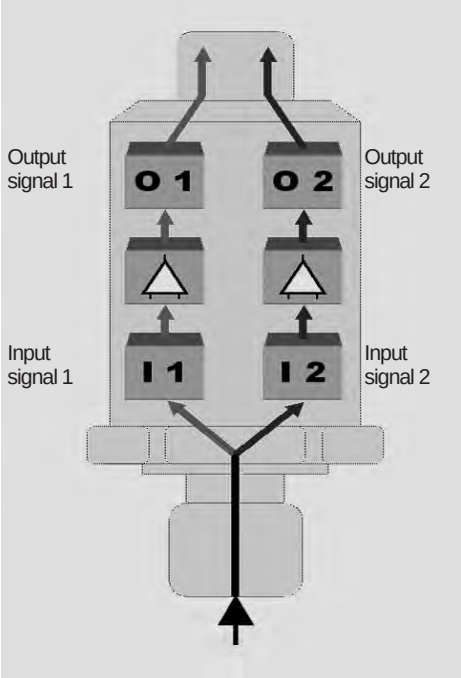

Model code:

HDA 4 7 4 X - C C - XXXX - XXXX - Pd- 000

Mechanical connection
4 = G1/4 A ISO 1179-2

Electrical connection
6 = male M12x1, 4 pole
(mating connector not supplied)
V = male Deutsch DT04, 4 pole
(mating connector not supplied)

Output signal 1
C = 4 .. 20 mA, 3-conductor

Output signal 2
C = 4 .. 20 mA, 3-conductor

Measuring ranges signal 1 in bar (max. operating pressure)
0025; 0040; 0060; 0100; 0160; 0250; 0400; 0600

Measuring ranges signal 2 in bar
0025; 0040; 0060; 0100; 0160; 0250; 0400; 0600; 1000

Measuring range signal 2 = Measuring range signal 1
or max. 1 pressure range higher

Functional safety
Pd = PL d – Cat 3 acc. to DIN EN 13849-1

Modification number
000 = standard

Accessories:
Appropriate accessories such as mating connectors can be found in the Accessories brochure.

Note:

The information in this brochure relates to the operating conditions and applications described.

For applications or operating conditions not described, please contact the relevant technical department.

Subject to technical modifications.

HYDAC ELECTRONIC GMBH
Hauptstr. 27, 66128 Saarbrücken
Germany
Phone +49 (0)6897 509-01
Fax +49 (0)6897 509-1726
e-mail: electronic@hydac.com
Internet: www.hydac.com

Pressure Transmitter HDA 8700 for series applications

Relative pressure | **Accuracy 0.25 %**

Increased Functional Safety

Functional Safety
PL d
SIL 2

Description:

This version of the pressure transmitter series HDA 8700 has been specially developed for use in safety circuits / safety functions as part of the functional safety of machinery and equipment up to SIL 2 (IEC 61508) or PL d (ISO 13849).

During normal operation the pressure transmitter HDA 8700 generates an output signal proportional to the pressure. In the background, the pressure transmitter performs cyclical diagnostic tests to detect internal errors.

If an instrument error is detected, the pressure transmitter HDA 8700 supplies an output signal < 3 mA which is recognised by the user as an unacceptable discrepancy.

This means that the pressure transmitter HDA 8700 achieves Performance Level d in the Safety category (based on a Category 2 of the architecture) and SIL 2. As a result, the pressure transmitter can be recommended for use in applications where safety is critical.

The main fields of application are in mobile and stationary safety-oriented systems such as load torque displays or load torque limitation in loading cranes or working platforms.

Technical data:

Input data								
Measuring ranges	bar	40	60	100	160	250	400	600
Overload pressures	bar	80	120	200	320	500	800	1000
Burst pressure	bar	200	300	500	800	1250	2000	2000
Mechanical connection (Tightening torque, recommended)				G1/4 A ISO 1179-2 (20 Nm) 7/16-20 UNF 2A (SAE 4) (15 Nm) 9/16-18 UNF 2A (SAE 6) (20 Nm)				
Parts in contact with fluid [1]				Mech. connection: Stainless steel Seal: FKM				
Output data								
Output signal, permitted load resistance				4 .. 20 mA $R_{Lmax} = (U_B – 12 V) / 20 mA [kΩ]$				
Output signal with error recognition				< 3 mA				
Accuracy acc. to DIN 16086, terminal based				≤ ± 0.25 % FS typ. ≤ ± 0.5 % FS max.				
Accuracy, B.F.S.L.				≤ ± 0.15 % FS typ. ≤ ± 0.25 % FS max				
Temperature compensation Zero point / span				≤ ± 0.01 % FS / °C typ. ≤ ± 0.02 % FS / °C max.				
Non-linearity acc. to DIN 16086, terminal based				≤ ± 0.3 % FS max.				
Hysteresis				≤ ± 0.1 % FS max.				
Repeatability				≤ ± 0.1 % FS				
Rise time				≤ 10 ms				
Long-term drift				≤ ± 0.3 % FS typ. / year				
Environmental conditions								
Compensated temperature range				-25 .. +85 °C				
Operating temperature range [2]				-40 .. +100 °C / -25 .. +100 °C				
Storage temperature range				-40 .. +100 °C				
Fluid temperature range [2]				-40 .. +125 °C / -25 .. +125 °C				
CE mark				EN 61000-6-1 / 2 / 3 / 4				
Vibration resistance acc. to DIN EN 60068-2-6 at 0 .. 500 Hz				≤ 25 g				
Shock resistance acc. to DIN EN 60068-2-27 (11 ms)				100 g / 6 ms / half-sine 500 g / 1 ms / half-sine				
Protection class acc. to DIN EN 60529 [3]				IP 67				
Safety-related data								
Performance level								
Based on				DIN EN ISO 13849-1:2008				
PL				d				
Architecture				Category 2				
Safety Integrity Level								
Based on				DIN EN 61508: 2010				
SIL				2				
Other data								
Electrical connection				M12x1, 4 pole AMP Junior Power Timer, 2 pole				
Supply voltage				12 .. 32 V DC				
Residual ripple of supply voltage				≤ 5 %				
Current consumption				≤ 25 mA				
Life expectancy				> 10 million cycles (0 .. 100 %)				
Weight				~ 75 g				

Note: Reverse polarity protection of the supply voltage, excess voltage, override and short circuit protection are provided.
FS (**F**ull **S**cale) = relative to complete measuring range
B.F.S.L. = **B**est **F**it **S**traight **L**ine

[1] Other seal materials on request
[2] -25 °C with FKM seal, -40 °C on request
[3] With mounted mating connector in corresponding protection class

Dimensions:

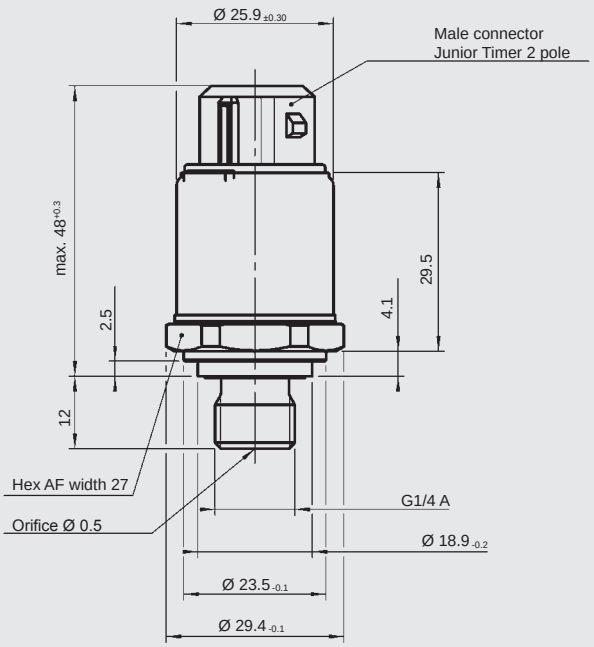

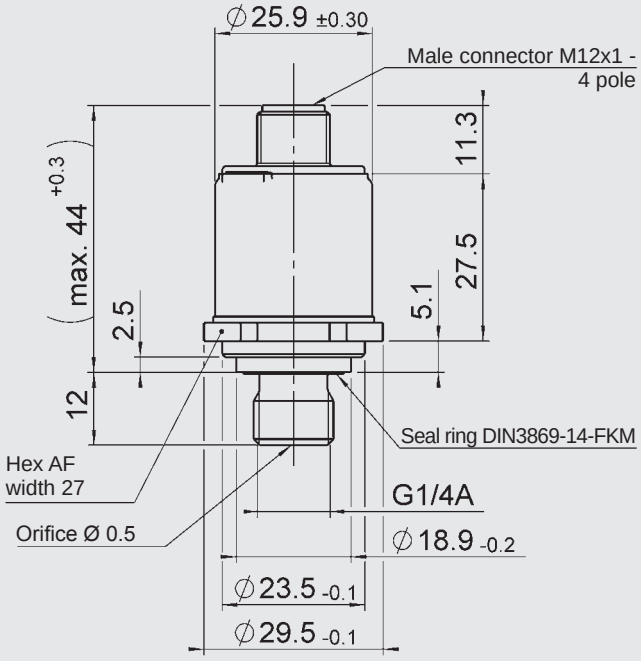

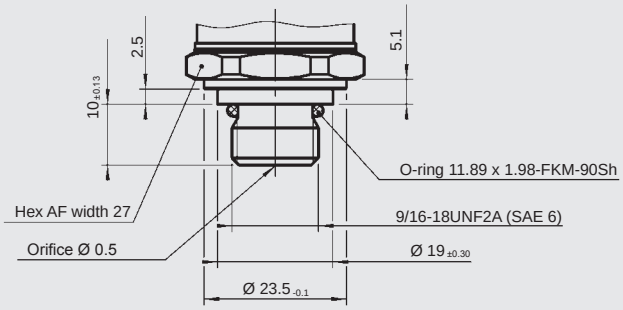

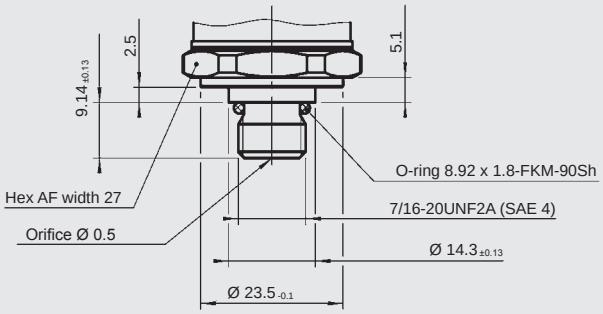

Order details:

This version of the electronic pressure transmitter HDA 8700 has been specially developed for OEM customers and is available for minimum order quantities of 500 pieces per type.

For exact specification, please contact the Sales Department of HYDAC ELECTRONIC.

Note:

The information in this brochure relates to the operating conditions and applications described.

For applications or operating conditions not described, please contact the relevant technical department.

Subject to technical modifications.

HYDAC ELECTRONIC GMBH
Hauptstr. 27, 66128 Saarbrücken
Germany
Phone +49 (0)6897 509-01
Fax +49 (0)6897 509-1726
e-mail: electronic@hydac.com
Internet: www.hydac.com

Pressure Transmitter HDA 4700

Relative pressure | **Accuracy 0.25 %**

CANopen SAE J1939

c UL us

CAN interface
Optional temperature measurement

Description:

HDA 4700 with CAN interface is a digital pressure transmitter which is used to measure relative pressures in hydraulics and pneumatics. The measured pressure value is digitised and made available to the CAN field bus system via the CANopen protocol or J1939 protocol. The instrument parameters can be viewed and configured by the user using standard CAN software.

This pressure transmitter, which is based on the HDA 4700 series, has a very accurate and robust sensor cell with a thin-film strain gauge on a stainless steel membrane.

Due to their outstanding temperature and EMC characteristics, together with their compact dimensions, these instruments can be used in a wide range of applications in the mobile and industrial sectors.

The device provides the option of an externally attached temperature probe that measures in the system fluid directly and can be thus be used for closed-loop control tasks. Adding the option of temperature measurement to the pressure transmitter functions saves one additional measuring point and eases the installation for the customer.

Technical data:

Input data							
Measuring ranges[1]	bar	40	100	250	400	600	1000
Overload pressures	bar	80	200	500	800	1000	1600
Burst pressure	bar	200	500	1000	2000	2000	3000
Mechanical connection				G1/4 A ISO 1179-2 G1/2 A ISO 1179-2			
Tightening torque, recommended				20 Nm (G1/4); 45 Nm (G1/2)			
Parts in contact with fluid				Mech. connection: Stainless steel Seal: FKM			
Output data							
Output signal				CANopen or J1939 protocol depending on version			
Accuracy acc. to DIN 16086, terminal based				≤ ± 0.25 % FS typ. ≤ ± 0.5 % FS max.			
Accuracy, B.F.S.L.				≤ ± 0.15 % FS typ. ≤ ± 0.25 % FS max.			
Temperature compensation Zero point				≤ ± 0.008 % FS / °C typ. ≤ ± 0.015 % FS / °C max.			
Temperature compensation Span				≤ ± 0.008 % FS / °C typ. ≤ ± 0.015 % FS / °C max.			
Non-linearity acc. to DIN 16086, terminal based				≤ ± 0.3 % FS max.			
Hysteresis				≤ ± 0.1 % FS max.			
Repeatability				≤ ± 0.08 % FS			
Rise time				≤ 1 ms			
Long-term drift				≤ ± 0.1 % FS typ. / year			
Environmental conditions							
Compensated temperature range				-25 .. +85 °C			
Operating temperature range[2]				-40 .. +85 °C / -25 .. +85 °C			
Storage temperature range				-40 .. +100 °C			
Medium temperature range[2]				-40 .. +100 °C / -25 .. +100 °C			
CE mark				EN 61000-6-1 / 2 / 3 / 4			
c UL us mark[3]				Certificate no.: E318391			
Vibration resistance acc. to DIN EN 60068-2-6 at 10 .. 500 Hz				≤ 20 g			
Protection class acc. to DIN EN 60529 [4]				IP 67			
Other data							
Supply voltage when applied acc. to UL specifications				9 .. 35 V DC - limited energy - acc. to 9.3 UL 61010; Class 2; UL 1310/1585; LPS UL 60950			
Residual ripple of supply voltage				≤ 5 %			
Current consumption				≤ 25 mA			
Life expectancy				> 10 million cycles (0 .. 100 % FS)			
Weight				~ 150 g			

Note: Reverse polarity protection of the supply voltage, excess voltage and short circuit protection are provided.
FS (**F**ull **S**cale) = relative to complete measuring range
B.F.S.L. = **B**est **F**it **S**traight **L**ine

[1] 1000 bar only with mech. connection G1/2 A ISO 1179-2 and vice versa
[2] -25 °C with FKM seal, -40 °C on request
[3] Environmental conditions acc. to 1.4.2 UL 61010-1; C22.2 No 61010-1
[4] With mounted mating connector in corresponding protection class

Protocol data for CANopen:

Communication profile	CiA DS 301 V4.2
Device profile	CiA DS 404 V1.3
Layer setting Services and Protocol	CiA DSP 305 V2.2
Automatic bit-rate detection	CiA AN 801
Baud rates	10 kbit .. 1 Mbit corresp. to DS305 V2.2
Transmission services - PDO - Transfer	 Measured value as 16/32 bit and float, status synchronous, asynchronous, cyclical, measured value change, exceeding boundaries
Node ID/baud rate	Can be set via Manufacturer Specific Profile

Protocol data for SAE J1939:

Data Link Layer	SAE J1939-21
Network Layer	SAE J1939-31
Network Management	SAE J1939-81

Dimensions:

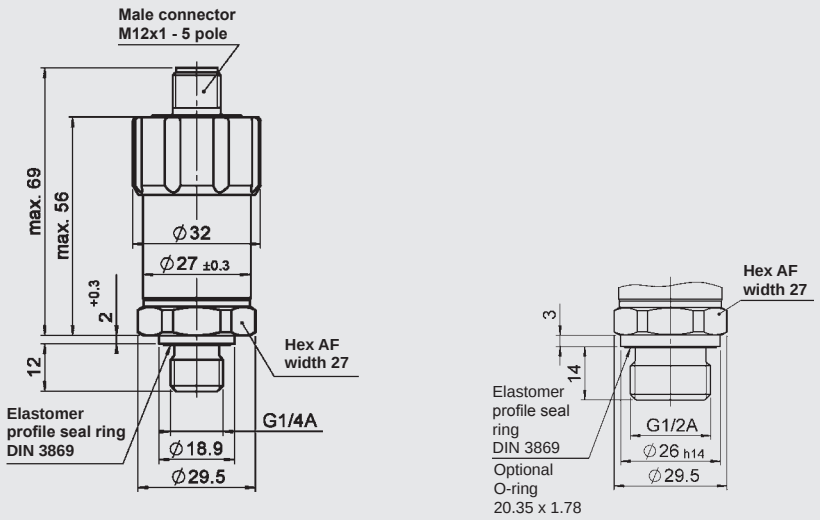

Model code:

HDA 4 7 X 8 – F1X – XXXX – 000

Mechanical connection
2 = G1/2 A ISO 1179-2
(only for measuring range ≥ 1000 bar)
4 = G1/4 A ISO 1179-2

Electrical connection
8 = male M12x1, 5 pole

Output signal
F11 = CANopen
F12 = CAN SAE J1939

Measuring ranges in bar
0040; 0100; 0250; 0400; 0600 (only with mech. connection code "4")
1000 (only with mech. connection code "2")

Modification number
000 = standard

Accessories:
Appropriate accessories, such as mating connectors, can be found in the Accessories brochure.

Pin connections:

M12x1

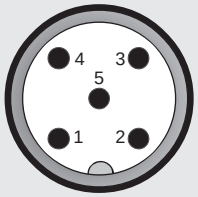

Pin	Signal	Description
1	Housing	shield/housing
2	$+U_B$	supply +
3	0 V	supply -
4	CAN_H	bus line dominant high
5	CAN_L	bus line dominant low

Additional technical data with temperature measurement option:

Input data					
Measuring range	-25 .. +100 °C				
Probe length	7 mm				
Mechanical connection	G1/2 A ISO 1179-2 with probe				
Tightening torque, recommended	45 Nm				
Measuring ranges pressure in bar	40	100	250	400	600
Output data					
Output signal Pressure	CAN protocol				
Output signal Temperature	The temperature signal is available via the CAN bus.				
Accuracy	≤ ± 1.0 % FS typ. ≤ ± 1.5 % FS max.				
Temperature drift (environment)	≤ ± 0.02 % FS / °C				
Rise time acc. to DIN EN 60751	t_{50}: ~ 4 s t_{90}: ~ 8 s				

Model code with temperature measurement option:

HDA 4 7 2 8 – F1X – XXXX – T – 007 – 000

Mechanical connection
2 = G1/2 A ISO 1179-2

Electrical connection
8 = male M12x1, 5 pole

Output signal
F11 = CANopen
F12 = CAN SAE J1939

Setting range in bar
0040; 0100; 0250; 0400; 0600; 1000

With temperature measurement

Probe length
007 = 7 mm

Modification number
000 = standard

Dimensions with temperature measurement option:

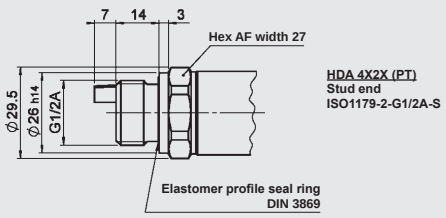

Note:

The information in this brochure relates to the operating conditions and applications described.

For applications or operating conditions not described, please contact the relevant technical department.

Subject to technical modifications.

HYDAC ELECTRONIC GMBH
Hauptstr. 27, 66128 Saarbrücken
Germany
Phone +49 (0)6897 509-01
Fax +49 (0)6897 509-1726
e-mail: electronic@hydac.com
Internet: www.hydac.com

EN 18.316.4/02.18

Pressure Transmitter HDA 7400

Relative pressure | **Accuracy 0.5 %**

CANopen SAE J1939

c UL us

CAN interface

Description:

HDA 7400 with CAN interface is a digital pressure transmitter which is used to measure relative pressures in hydraulics and pneumatics. The measured pressure value is digitised and made available to the CAN field bus system via the CANopen protocol or J1939 protocol. The instrument parameters can be viewed and configured by the user using standard CAN software.

This pressure transmitter, which is based on the HDA 7400 series, has a very accurate and robust sensor cell with a thin-film strain gauge on a stainless steel membrane.

Due to their outstanding temperature and EMC characteristics, together with their compact dimensions, these instruments can be used in a wide range of applications in the mobile and industrial sectors.

Technical data:

Input data						
Measuring ranges	bar	40	100	250	400	600
Overload pressure	bar	80	200	500	800	1000
Burst pressure	bar	200	500	1000	2000	2000
Mechanical connection			G1/4 A ISO 1179-2			
Tightening torque, recommended			20 Nm			
Parts in contact with fluid			Mech. connection: Stainless steel Seal: FKM			
Output data						
Output signals			CANopen protocol or J1939 protocol, depending on version			
Accuracy acc. to DIN 16086, terminal based			≤ ± 0.5 % FS typ. ≤ ± 1.0 % FS max.			
Accuracy, B.F.S.L.			≤ ± 0.25 % FS typ. ≤ ± 0.5 % FS max.			
Temperature compensation Zero point			≤ ± 0.015 % FS / °C typ. ≤ ± 0.025 % FS / °C max.			
Temperature compensation Span			≤ ± 0.015 % FS / °C typ. ≤ ± 0.025 % FS / °C max.			
Non-linearity acc. to DIN 16086, terminal based			≤ ± 0.3 % FS max.			
Hysteresis			≤ ± 0.4 % FS max.			
Repeatability			≤ ± 0.1 % FS max.			
Rise time			≤ 2 ms			
Long-term drift			≤ ± 0.3 % FS / year typ.			
Environmental conditions						
Compensated temperature range			-25 .. +85 °C			
Operating temperature range [1]			-40 .. +85 °C / -25 .. +85 °C			
Storage temperature range			-40 .. +100 °C			
Fluid temperature range [1]			-40 .. +100 °C / -25 .. +100 °C			
CE mark			EN 61000-6-1 / 2 / 3 / 4			
c UL us mark [2]			Certificate-No.: E318391			
Vibration resistance acc. to DIN EN 60068-2-6 at 10 .. 500 Hz			≤ 20 g			
Protection class acc. to DIN EN 60529			IP 67			
Other data						
Supply voltage when applied acc. to UL specifications			9 .. 35 V DC – limited energy – acc. to 9.3 UL 61010; Class 2; UL 1310/1585; LPS UL 60950			
Residual ripple of supply voltage			≤ 5 %			
Current consumption			≤ 25 mA			
Life expectancy			> 10 million cycles (0 .. 100 % FS)			
Weight			~ 60 g			

Note: Reverse polarity protection of the supply voltage, excess voltage, override and short circuit protection are provided.
FS (**F**ull **S**cale) = relative to complete measuring range
B.F.S.L. = **B**est **F**it **S**traight **L**ine

[1] -25 °C with FKM seal, -40 °C on request
[2] Environmental conditions acc. to 1.4.2 UL 61010-1; C22.2 No. 61010-1

Protocol data for CANopen:

Communication profile	CiA DS 301 V4.2
Device profile	CiA DS 404 V1.3
Layer setting Services and Protocol	CiA DSP 305 V2.2
Automatic bit-rate detection	CiA AN 801
Baud rates	10 kbit .. 1 Mbit corresp. to DS305 V2.2
Transmission services - PDO - Transfer	 Measured value as 16/32 bit and float, status synchronous, asynchronous, cyclical, measured value change, exceeding boundaries
Node ID/baud rate	Can be set via Manufacturer Specific Profile

Protocol data for SAE J1939:

Data Link Layer	SAE J1939-21
Network Layer	SAE J1939-31
Network Management	SAE J1939-81

Dimensions:

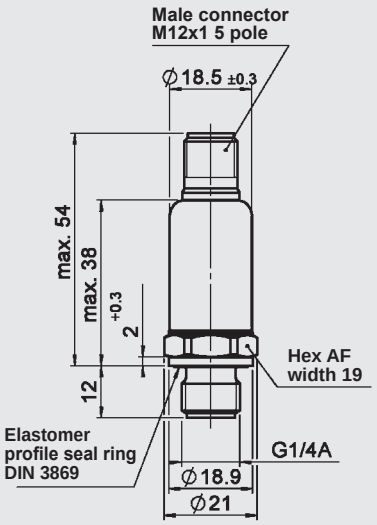

Model code:

HDA 7 4 4 8 – FXX – XXXX – 000

Mechanical connection
4 = G1/4 A ISO 1179-2

Electrical connection
8 = male M12x1, 5 pole

Signal
F11 = CANopen
F12 = CAN SAE J1939

Measuring ranges in bar
0040; 0100; 0250; 0400; 0600

Modification number
000 = standard

Accessories:
Appropriate accessories, such as mating connectors, can be found in the Accessories brochure.

Pin connections:

M12x1

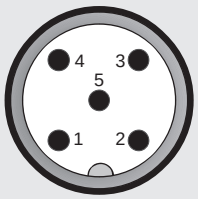

Pin	Signal	Description
1	Housing	shield/housing
2	+UB	supply +
3	0 V	supply -
4	CAN_H	bus line dominant high
5	CAN_L	bus line dominant low

Note:

The information in this brochure relates to the operating conditions and applications described.

For applications or operating conditions not described, please contact the relevant technical department.

Subject to technical modifications.

HYDAC ELECTRONIC GMBH
Hauptstr. 27, 66128 Saarbrücken
Germany
Phone +49 (0)6897 509-01
Fax +49 (0)6897 509-1726
e-mail: electronic@hydac.com
Internet: www.hydac.com

Pressure Transmitter HDA 4700

Relative pressure | **Accuracy 0.25 %**

HART interface
Optional temperature measurement

Description:

HDA 4700 with HART interface is a digital pressure transmitter which is used to measure relative pressures in hydraulics and pneumatics. In addition to the analogue output of the measured value, digital communication is possible by means of the HART protocol.

This pressure transmitter, which is based on the HDA 4700 series, has a very accurate and robust sensor cell with a thin-film strain gauge on a stainless steel membrane.

Due to their outstanding temperature and EMC characteristics, together with their compact dimensions, these instruments can be used in a wide range of applications.

The instrument provides the option of a temperature sensor. The temperature signal is given out as a digital signal via the HART protocol and the pressure signal is still available as an analogue signal (4 .. 20 mA).

Technical data:

Input data												
Measuring ranges	bar	6	16	40	60	100	250	400	600	1000	1600	2000
Overload pressures	bar	12	32	80	120	200	500	800	1000	1600	2400	3000
Burst pressure	bar	100	200	200	300	500	1000	2000	2000	3000	3000	4000

Mechanical connection	G1/4 A ISO 1179-2 G1/2 B DIN EN 837
Tightening torque, recommended	20 Nm (G1/4 A), 45 Nm (G1/2 B)
Parts in contact with fluid	Stainless steel, FKM
Output data	
Output signal, permitted load resistance	4 .. 20 mA, 2-conductor, with HART protocol $R_{Lmax.} = (U_B - 12\ V) / 20\ mA\ [k\Omega]$ for HART communication min. 250 Ω
HART Communication	Acc. to HART 7 specifications
HART Common Practice Commands i.e.	Altering of measuring range limits (see table)
	Zero point adjustment within max. 3 % of the span
Accuracy acc. to DIN 16086, terminal based	≤ ± 0.25 % FS typ. ≤ ± 0.5 % FS max.
Accuracy, B.F.S.L.	≤ ± 0.15 % FS typ. ≤ ± 0.25 % FS max.
Temperature compensation Zero point	≤ ± 0.008 % FS / °C typ. ≤ ± 0.015 % FS / °C max.
Temperature compensation Span	≤ ± 0.008 % FS / °C typ. ≤ ± 0.015 % FS / °C max.
Non-linearity acc. to DIN 16086, terminal based	≤ ± 0.3 % FS max.
Hysteresis	≤ ± 0.1 % FS max.
Repeatability	≤ ± 0.05 % FS
Rise time	≤ 25 ms
Long-term drift	≤ ± 0.1 % FS / typ. year
Environmental conditions	
Compensated temperature range	-25 .. +85 °C
Operating temperature range [1]	-40 .. +85 °C / -25 .. +85 °C
Storage temperature range	-40 .. +100 °C
Fluid temperature range [1]	-40 .. +100 °C / -25 .. +100 °C
CE mark	EN 61000-6-1 / 2 / 3 / 4
Vibration resistance acc. to DIN EN 60068-2-6 at 10 .. 500 Hz	≤ 20 g
Protection class acc. to DIN EN 60529 [2]	IP 65 male connector EN 175301-803 IP 67 male connector M12x1
Other data	
Supply voltage	12 .. 30 V DC
Residual ripple of supply voltage	46 .. 125 Hz: < 0.2 Vpp > 125 Hz: < 1.2 mV RMS
Life expectancy [3]	> 10 million cycles (0 .. 100 % FS)
Weight	150 g

Note: Reverse polarity protection of the supply voltage, excess voltage, override and short circuit protection are provided.
FS (**F**ull **S**cale) = relative to complete measuring range
B.F.S.L. = **B**est **F**it **S**traight **L**ine

[1] -25 °C with FKM seal, -40 °C on request
[2] With mounted mating connector in corresponding protection class
[3] Measuring ranges ≥ 1000 bar: > 1 million cycles (0 .. 100 % FS)

Measuring range limits:

By means of HART Common Practice Commands, you have the opportunity to adjust the following measuring range limits:
Measuring range limits of the primary variable, pressure:

Lower measuring range limit		Upper measuring range limit		Measuring span	
min	max	min	max	min	max
0 % FS	112.5 % FS	37.5 % FS	150 % FS	37.5 % FS	150% FS

Dimensions:

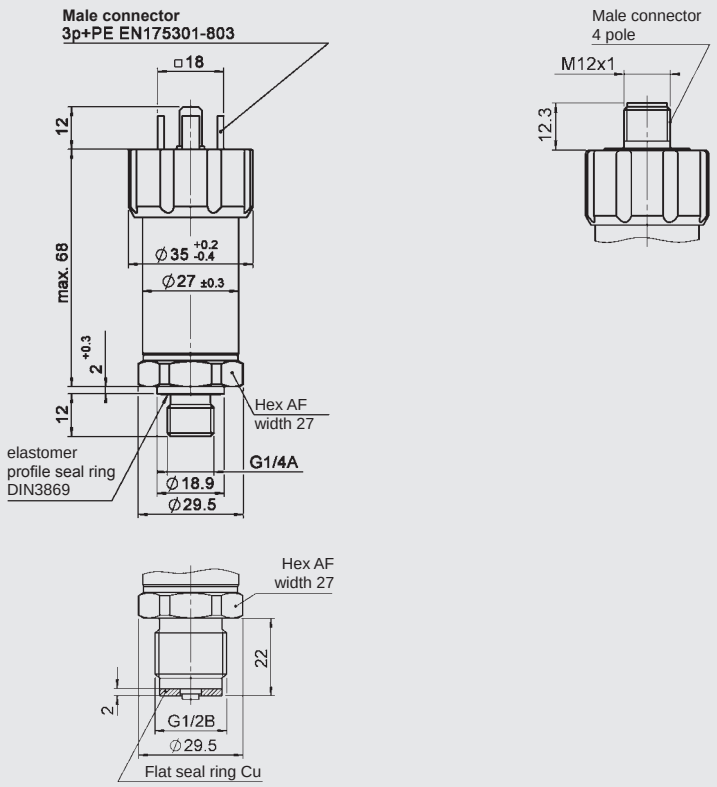

Model code:

HDA 4 7 X X – F21 – XXXX – 000

Mechanical connection
1 = G1/2 B DIN EN 837
(only for measuring ranges ≥ 1600 bar)
4 = G1/4 A ISO 1179-2

Electrical connection
5 = male, EN 175301-803, 3 pole+PE
(IP 67 mating connector supplied)
6 = male M12x1, 4 pole
(mating connector not supplied)

Output signal
F21 = 4 .. 20 mA, 2-conductor, with HART protocol

Measuring ranges in bar
0006; 0016; 0040; 0060; 0100; 0250; 0400; 0600; 1000 (only with mech. connection code "4")
1600; 2000 (only with mech. connection code "1")

Modification number
000 = standard

Accessories:
Appropriate accessories, such as mating connectors, can be found in the Accessories brochure.

Pin connections:

EN 175301-803

HDA	4xx5-F
1	Signal +
2	Signal -
3	n.c.
⊥	PE

M12x1

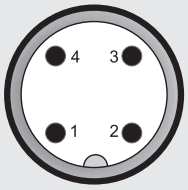

Pin	HDA 4xx6-F
1	Signal +
2	n.c.
3	Signal -
4	n.c.

Additional technical data with temperature measurement option:

Input data							
Measuring range	-25 .. +100 °C						
Probe length	7 mm						
Mechanical connection	G½ A ISO 1179-2 with probe (45 Nm)						
Measuring ranges pressure	16	40	60	100	250	400	600
Output data							
Output signal pressure	4 .. 20 mA with HART Protocol						
Output signal temperature	Available via HART protocol as a digital signal						
Accuracy at room temperature	≤ ± 0.4 % FS typ. ≤ ± 0.8 % FS max.						
Temperature drift (environment)	≤ ± 0.01 % FS / °C						
Reaction time acc. to DIN EN 60751	t_{50}: ~ 10 s t_{90}: ~ 15 s						

Dimensions with temperature measurement option:

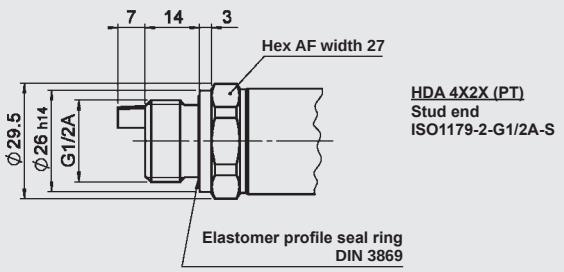

Measuring range limits:

Additional measuring range limits of the secondary variable, temperature:

Lower measuring range limit		Upper measuring range limit		Measuring span	
min	max	min	max	min	max
-25 °C	75 °C	0 °C	100 °C	25 °C	125 °C

Model code with temperature measurement option:

HDA 4 7 2 X – F21 –XXXX - T – 007 – 000

Mechanical connection
2 = G1/2 A ISO 1179-2

Electrical connection
5 = male, EN 175301-803, 3 pole +PE
(IP 67 mating connector supplied)
6 = male M12x1, 4 pole
(mating connector not supplied)

Output signal
F21 = 4 .. 20 mA, 2-conductor, with HART protocol

Measuring ranges in bar
0016; 0040; 0060; 0100; 0250; 0400; 0600

With temperature measurement

Probe length
007 = 7 mm

Modification number
000 = standard

Note:

The information in this brochure relates to the operating conditions and applications described.

For applications or operating conditions not described, please contact the relevant technical department.

Subject to technical modifications.

HYDAC ELECTRONIC GMBH
Hauptstraße 27, 66128 Saarbrücken
Germany
Telephone +49 (0)6897 509-01
Fax +49 (0)6897 509-1726
E-mail: electronic@hydac.com
Internet: www.hydac.com

Pressure Transmitter HDA 4800 for Iron and Steelworks

Relative pressure | **Accuracy 0.125 %**

Includes test certificate

Description:

This high-precision pressure transmitter was specially developed and adapted for the sophisticated measurement demands of steelworks technology.

The instrument has a very robust sensor cell with a thin-film strain gauge on a stainless steel membrane.

Its outstanding specifications in respect of temperature effect (temperature drift for zero point and span are in each case max. ≤ ± 0.01 % FS / °C) and accuracy (≤ ± 0.125 % FS typ.) make it ideally suited for use in the environmental conditions found in steelworks.

The excellent EMC characteristics guarantee signal stability during the harshest high-frequency, electromagnetic interference.

Additional protection against humidity and vibrations is achieved by encapsulation. A heat shrink sleeving is used to protect the sensor from bending.

Technical data:

Input data												
Measuring ranges [1]	bar	16	60	100	150	250	300	350	400	500	600	1000
Overload pressures	bar	32	120	200	500	800	900	900	900	1000	1000	1600
Burst pressure	bar	200	300	500	1000	2000	2000	2000	2000	2000	2000	3000
Mechanical connection [1]					G 1/4A ISO 1179-2 with 0.5 mm orifice G 1/2A ISO 1179-2 with 0.5 mm orifice							
Tightening torque, recommended					20 Nm (G1/4); 45 Nm (G1/2)							
Parts in contact with fluid					Mech. connection: Stainless steel Seal: FKM for G1/4, NBR for G1/2							
Output data												
Output signal, permitted load resistance					4 .. 20 mA, 2-conductor $R_{Lmax.} = (U_B - 10\ V) / 20\ mA\ [k\Omega]$ 0 .. 20 mA, 3-conductor source $R_{Lmax.} = (U_B - 4\ V) / 20\ mA\ [k\Omega]$							
Accuracy acc. to DIN 16086, terminal based					≤ ± 0.125 % FS typ. ≤ ± 0.25 % FS max.							
Accuracy, B.F.S.L.					≤ ± 0.06 % FS typ. ≤ ± 0.125 % FS max.							
Temperature compensation Zero point					≤ ± 0.005 % FS / °C typ. ≤ ± 0.01 % FS / °C max.							
Temperature compensation Span					≤ ± 0.005 % FS / °C typ. ≤ ± 0.01 % FS / °C max.							
Non-linearity acc. to DIN 16086, terminal based					≤ ± 0.15 % FS max. (below 100 bar ± 0.2 % FS max.)							
Hysteresis					≤ ± 0.1 % FS max.							
Repeatability					≤ ± 0.05 % FS							
Rise time					≤ 1.0 ms							
Long-term drift					≤ ± 0.1 % FS typ. / year							
Environmental conditions												
Compensated temperature range					-25 .. +85 °C							
Operating temperature range [2]					-25 .. +85 °C / -40 .. +85 °C							
Storage temperature range					-40 .. +100 °C							
Fluid temperature range [2]					-25 .. +100 °C / -40 .. +100 °C							
CE mark					EN 61000-6-1 / 2 / 3 / 4							
cULus mark [3]					Certificate-No.: E318391							
Vibration resistance acc. to DIN EN 60068-2-6 at 10 .. 500 Hz					≤ 25 g							
Protection class acc. to DIN EN 60529					IP 67 (M12x1 when an IP 67 mating connector is used) IP 68 (jacketed cable)							
Other data												
Supply voltage when applied acc. to UL specifications					10 .. 30 V DC 2-conductor / 3-conductor - limited energy - acc. to 9.3 UL 61010; Class 2; UL 1310/1585; LPS UL 60950							
Residual ripple of supply voltage					≤ 5 %							
Current consumption					≤ 25 mA							
Additional protection against water, humidity and vibration					Encapsulation of the device, cable outlet with strain relief, heat shrink sleeving							
Life expectancy					>10 million cycles (0 .. 100 % FS)							
Weight					~180 g plus 90 g/m cable							

Note: Reverse polarity protection of the supply voltage, excess voltage, override and short circuit protection are provided.
FS (**F**ull **S**cale) = relative to complete measuring range
B.F.S.L. = **B**est **F**it **S**traight **L**ine

[1] 1000 bar only with mech. connection G1/2 A ISO1179-2 and vice versa
[2] -25 °C with FKM seal, -40 °C on request
[3] Environmental conditions acc. to 1.4.2 UL 61010-1; C22.2 No. 61010-1

Dimensions:

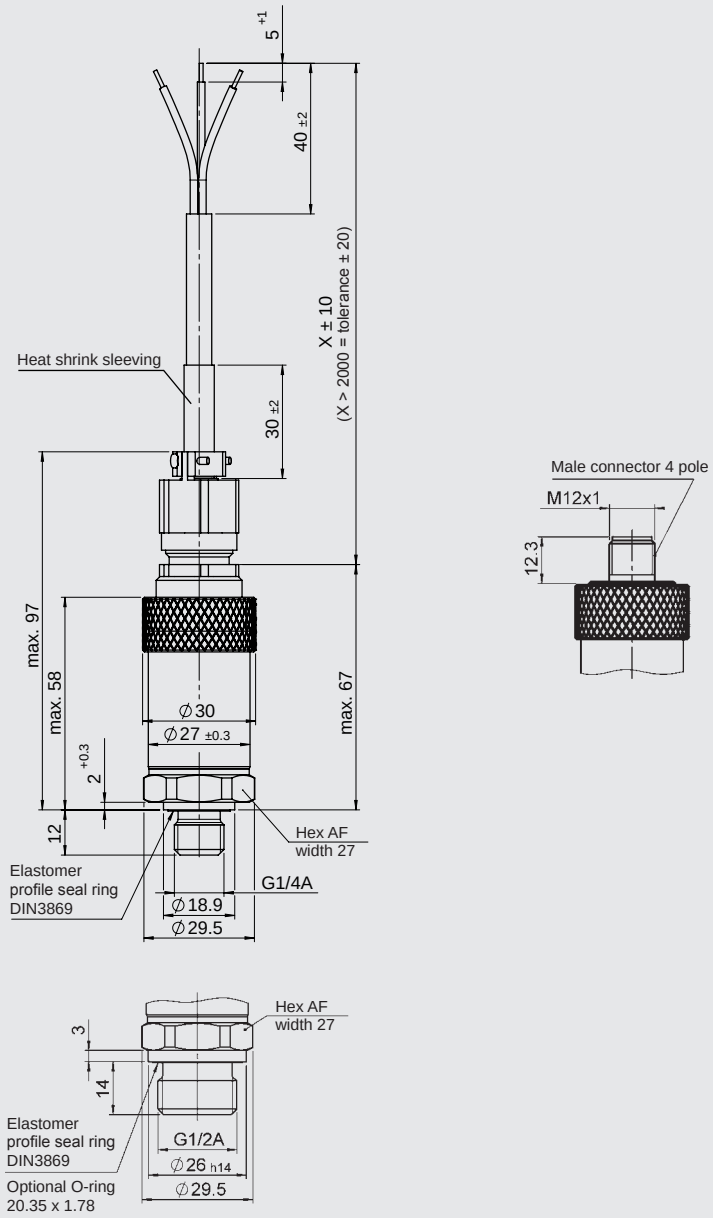

Cable assignment:

Lead	HDA 48X0-A	HDA 48X0-E
black	n.c.	$+U_B$
Brown	Signal +	Signal
Blue	Signal -	0 V

Cable type:

Ölflon cable 3 x 0.75 mm² shielded.
Outer sheath FEP black
Outer diameter 5.9 ±0.15 mm

Pin connections:

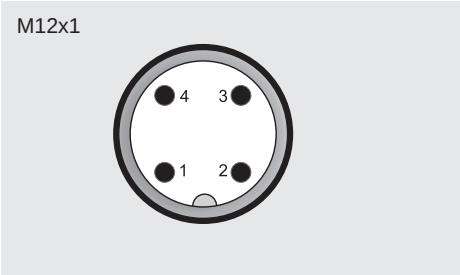

Pin	HDA 48X6-A	HDA 48X6-E
1	Signal +	$+U_B$
2	n.c.	n.c.
3	Signal -	0 V
4	n.c.	Signal

Model code:

HDA 4 8 X X – X – XXXX – 424 (XXM)

Mechanical connection
2 = G 1/2 A ISO 1179-2 (male)
4 = G 1/4 A DIN 3852 (male)

Electrical connection
0 = jacketed cable
6 = male M12x1, 4 pole
(mating connector not supplied)

Output signal
A = 4 .. 20 mA, 2-conductor
E = 0 .. 20 mA, 3-conductor

Measuring ranges in bar
0016; 0060; 0100; 0150; 0250; 0300; 0350; 0400; 0500; 0600;
1000 (only with mech. connection G1/2")

Modification number
424 = iron and steel works

Cable length in metres
06; 10; 15; 20; 25; 30

Note:
On instruments with a different modification number, please read the label or the technical amendment details supplied with the instrument.

Note:

The information in this brochure relates to the operating conditions and applications described.

For applications or operating conditions not described, please contact the relevant technical department.

Subject to technical modifications.

HYDAC ELECTRONIC GMBH
Hauptstraße 27, 66128 Saarbrücken
Germany
Telephone +49 (0)6897 509-01
Fax +49 (0)6897 509-1726
E-mail: electronic@hydac.com
Internet: www.hydac.com

Pressure Transmitter HDA 4100

Absolute pressure | **Accuracy 0.5 %**

Description:

The pressure transmitter series HDA 4100 has a ceramic pressure measurement cell with thick-layer strain gauge which has been specially developed for measuring absolute pressure in the low-pressure range.

The output signals 4 .. 20 mA or 0 .. 10 V allow connection of all HYDAC ELECTRONIC GMBH measurement and control devices as well as industry standard open- and closed-loop control instruments.

The main fields of application are low-pressure applications in hydraulics and pneumatics, particularly in refrigeration and air-conditioning technology and pharmaceutical industries.

Technical data:

Input data			
Measuring ranges	bar	1	2.5
Overload pressures	bar	3	8
Burst pressure	bar	5	12
Mechanical connection	G1/4 A ISO 1179-2 G1/2 B DIN EN 837		
Tightening torque, recommended	20 Nm (G1/4); 45 Nm (G1/2)		
Parts in contact with fluid	Mech. connection: Stainless steel Sensor cell: Ceramic Seal: Copper (G1/2) / FKM / EPDM (as per model code)		
Output data			
Output signal, permitted load resistance	4 .. 20 mA, 2-conductor $R_{Lmax} = (U_B - 8\ V) / 20\ mA\ [k\Omega]$ 0 .. 10 V, 3-conductor $R_{Lmin} = 2\ k\Omega$		
Accuracy acc. to DIN 16086, terminal based	≤ ± 0.5 % FS typ. ≤ ± 1.0 % FS max.		
Accuracy, B.F.S.L.	≤ ± 0.25 % FS typ. ≤ ± 0.5 % FS max.		
Temperature compensation Zero point	≤ ± 0.02 % FS / °C typ. ≤ ± 0.03 % FS / °C max.		
Temperature compensation Span	≤ ± 0.02 % FS / °C typ. ≤ ± 0.03 % FS / °C max.		
Non-linearity acc. to DIN 16086, terminal based	≤ ± 0.5 % FS max.		
Hysteresis	≤ ± 0.4 % FS max.		
Repeatability	≤ ± 0.1 % FS		
Rise time	≤ 1 ms		
Long-term drift	≤ ± 0.3 % FS typ. / year		
Environmental conditions			
Compensated temperature range	-25 .. +85 °C		
Operating temperature range [1]	-40 .. +85 °C / -25 .. +85 °C		
Storage temperature range	-40 .. +100 °C		
Fluid temperature range [1]	-40 .. +100 °C / -25 .. +100 °C		
CE mark	EN 61000-6-1 / 2 / 3 / 4		
cULus mark [2]	Certificate no.: E318391		
Vibration resistance acc. to DIN EN 60068-2-6 at 10 .. 500 Hz	≤ 20 g		
Shock resistance acc. to DIN EN 60068-2-27	≤ 100 g / 6 ms		
Protection class acc. to DIN EN 60529 [3]	IP 65 (Binder 714 M18) IP 67 - M12x1 male connector - Male connector EN175301-803		
Other data			
Supply voltage	8 .. 30 V DC 2-conductor 12 .. 30 V DC 3-conductor		
when applied acc. to UL specifications	- limited energy - acc. to 9.3 UL 61010; Class 2; UL 1310/1585; LPS UL 60950		
Residual ripple of supply voltage	≤ 5 %		
Current consumption	≤ 25 mA		
Life expectancy	> 10 million cycles (0 .. 100 % FS)		
Weight	~ 150 g		

Note: Reverse polarity protection of the supply voltage, excess voltage, override and short circuit protection are provided.
FS (**F**ull **S**cale) = relative to complete measuring range
B.F.S.L. = **B**est **F**it **S**traight **L**ine

[1] -25 °C with FKM or EPDM seal, -40 °C on request
[2] Environmental conditions acc. to 1.4.2 UL 61010-1; C22.2 No 61010-1
[3] With mounted mating connector in corresponding protection class

Dimensions:

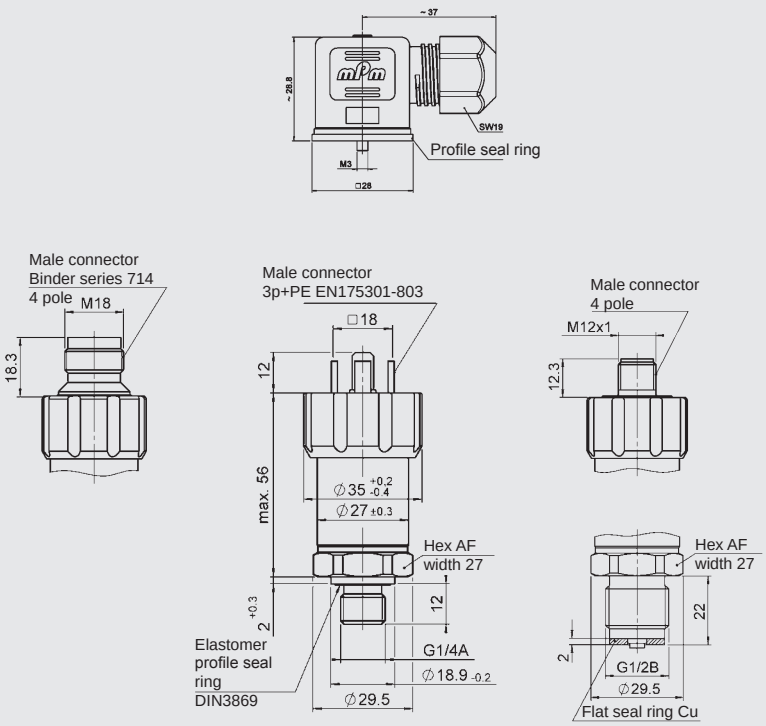

Model code:

HDA 4 1 X X – X – XXXX – 000 – X 1

Mechanical connection
1 = G1/2 B DIN EN 837
4 = G1/4 A ISO 1179-2

Electrical connection
4 = male, Binder series 714 M18, 4 pole (mating connector not supplied)
5 = male, EN175301-803, 3 pole +PE (IP 67 mating connector supplied)
6 = male M12x1, 4 pole (mating connector not supplied)

Output signal
A = 4 .. 20 mA, 2-conductor
B = 0 .. 10 V, 3-conductor

Measuring ranges in bar
01.0; 02.5

Modification number
000 = standard

Sealing material (in contact with fluid)
F = FKM seal (e.g. for hydraulic oils)
E = EPDM seal (e.g. for refrigerants)

Connection material (in contact with fluid)
1 = stainless steel

Accessories:
Appropriate accessories such as mating connectors can be found in the Accessories brochure.

Pin connections:

Binder series 714 M18

Pin	HDA 41X4-A	HDA 41X4-B
1	n.c.	$+U_B$
2	Signal +	Signal
3	Signal -	0 V
4	n.c.	n.c.

EN175301-803

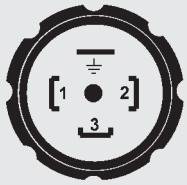

Pin	HDA 41X5-A	HDA 41X5-B
1	Signal +	$+U_B$
2	Signal -	0 V
3	n.c.	Signal
⊥	Housing	Housing

M12x1

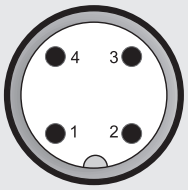

Pin	HDA 41X6-A	HDA 41X6-B
1	Signal +	$+U_B$
2	n.c.	n.c.
3	Signal -	0 V
4	n.c.	Signal

Note:

The information in this brochure relates to the operating conditions and applications described.

For applications or operating conditions not described, please contact the relevant technical department.

Subject to technical modifications.

HYDAC ELECTRONIC GMBH
Hauptstraße 27, 66128 Saarbrücken
Germany
Telephone +49 (0)6897 509-01
Fax +49 (0)6897 509-1726
E-mail: electronic@hydac.com
Internet: www.hydac.com

Differential Pressure Transmitter HPT 500

Differential pressure | **Accuracy 3 %** | **High pressure resistance**

Description:

The HPT differential pressure transmitter series was specially developed to provide an low-cost solution for differential pressure. Via an internal piston movement, the generated differential pressure is detected by means of a Hall sensor.

The sensor reacts to increasing contamination degree of the element by increasing the differential pressure signal.

The media compatibility includes hydraulic oils, lubrication oils, HFA, HFB and HFD as well as all further environment-friendly fluids [1].

The differential pressure transmitter is used in systems requiring a continuous, intelligent monitoring of the differential pressure. It is used both in mobile and in industrial applications.

Technical data:

Input data			
Measuring ranges	Differential pressure 2; 5; 8 bar		
		Aluminium	Stainless steel
Pressure resistance		160 bar	420 bar
Overload pressures		200 bar	600 bar
Burst pressure		350 bar	1600 bar
Mechanical connection	G ½ HN 28-22		
Tightening torque, recommended		33 Nm	100 Nm
Parts in contact with fluid [2]	Mech. connection:	Aluminium or stainless steel	
	Seals:		
	O-ring:	Standard NBR	
	Profile seal ring:	NBR (aluminium version) PTFE (stainless steel version)	
Output data			
Output signal	4 .. 20 mA, load resistance max. U_B-3 V / 0.02 A 0 .. 10 V 0.5 .. 4.5 x ratiometric		
Accuracy acc. to DIN 16086, terminal based	≤ ± 3 % FS typ. ≤ ± 5 % FS max. (in rel. to Δp)		
Temperature drift	≤ ± 0.05 % / °C max. zero point ≤ ± 0.05 % / °C max. span		
Long-term drift	≤ ± 0.5 % FS typ. / year		
Environmental conditions			
Compensated temperature range	+20 °C .. +70 °C		
Operating temperature range	-20 °C .. +85 °C		
Storage temperature range	-40 °C .. +100 °C		
Fluid temperature range	-20 °C .. +85 °C		
CE mark	EN 61000-1 / 2 / 3 / 4		
Vibration resistance acc. to DIN EN 60068-2-6 at 10 .. 500 Hz	≤ 20 g		
Shock resistance acc. to DIN EN 60068-2-27 (1 ms)	50 g		
Protection class [3] acc. to DIN EN 60529	IP 67 (M12x1), IP 69 (DT 04)		
ISO 20653	IP 6K9K (DT 04)		
Other data			
Supply voltage, 3-conductor	8 .. 30 V DC		
Supply voltage ratiometric	5 V DC ± 5 %		
Residual ripple of supply voltage	≤ 5 %		
Current consumption 3-conductor	approx. 25 mA		
Life expectancy	> 1 million cycles (max. diff. pressure resistance)		
Weight	~ 80 g (aluminium) ~ 170 g (stainless steel)		

Note: Reverse polarity protection of the supply voltage, excess voltage, override and short circuit protection are provided.
FS (**F**ull **S**cale) = relative to complete measuring range

[1] Medium compatibility with HFC on request
[2] Other sealing materials on request
[3] With mounted mating connector in corresponding protection class

Dimensions:

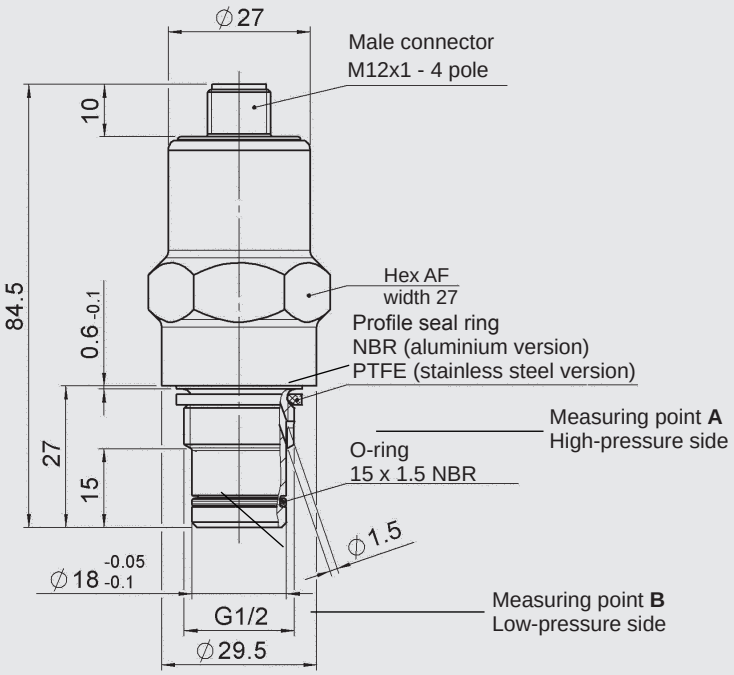

Pin connections:

M12x1

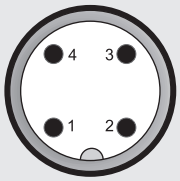

Pin	HPT 506
1	$+U_B$
2	n.c.
3	0 V
4	Signal

DT 04 3 pole

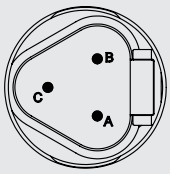

Pin	HPT 50K
A	$+U_B$
W	Signal
C	0 V

Function:

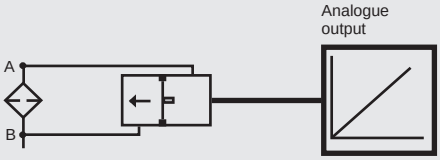

Characteristics:

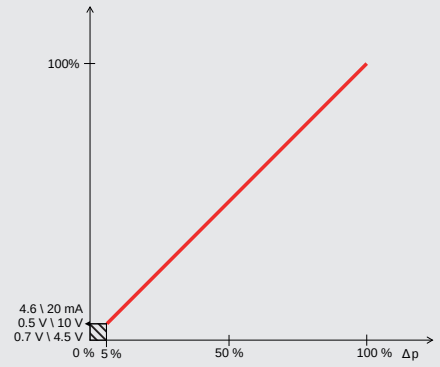

Model code:

HPT 5 0 X – X – XXXX - X – 000

Electrical connection
6 = male M12x1, 4 pole
K = male DT04, 3 pole

Output signal
B = 0 .. 10 V, 3-conductor
C = 4 .. 20 mA, 3-conductor
R = 0.5 .. 4.5 V ratiometric, 3-conductor

Differential pressure ranges in bar
02.0; 05.0; 08.0

Housing material
A = aluminium
S = stainless steel

Modification number
000 = standard

Accessories:
Appropriate accessories, such as connector blocks, available on request

Note:

The information in this brochure relates to the operating conditions and applications described.

For applications or operating conditions not described, please contact the relevant technical department.

Subject to technical modifications.

HYDAC ELECTRONIC GMBH
Hauptstr. 27, 66128 Saarbrücken
Germany
Phone +49 (0)6897 509-01
Fax +49 (0)6897 509-1726
e-mail: electronic@hydac.com
Internet: www.hydac.com

Pressure Transmitter HDA 4700 Ex applications

Relative pressure | **Accuracy 0.25 %**

Flameproof enclosure
ATEX, IECEx, CSA, triple approval

Description:

The HDA 4700 electronic pressure transmitter series with flameproof enclosure has triple approval acc. to ATEX, CSA and IECEx which ensures the instrument is universally suitable for use in potentially explosive atmospheres around the world.

Each instrument is certified by the three approvals organizations and is labelled acc. ly. Therefore there is no longer any need to stock multiple devices with separate individual approvals.

As with the industry model of the HDA 4700, those with triple approval have a proven, fully welded sensor cell with a thin-film strain gauge on a stainless stell membrane without internal seal.

The main fields of application are in mining and the oil & gas industry, e.g. in underground vehicles, hydraulic power units, blow-out preventers (BOPs), drill drives or valve actuation stations as well as in areas with high levels of dust contamination.

Protection types and applications:

$_{c}$CSA$_{US}$ Explosionproof - Seal not required
Class I Group A, B, C, D, T6, T5
Class II Group E, F, G
Class III
Type 4

ATEX Flameproof
I M2 Ex d I Mb
II 2G Ex d IIC T6, T5 Gb
II 2D Ex tb IIIC T110 .. 130 °C Db

IECEx Flameproof
Ex d I Mb
Ex d IIC T6, T5 Gb
Ex tb IIIC T110 .. 130 °C Db

Technical data:

Input data												
Measuring ranges	bar	6	16	40	60	100	250	400	600	1000	1600	2000
Overload pressures	bar	15	32	80	120	200	500	800	1000	1600	2400	3000
Burst pressure	bar	100	200	200	300	500	1000	2000	2000	3000	3000	4000

Mechanical connection	G1/4 A ISO 1179-2 G1/2 B DIN EN 837
Tightening torque, recommended	20 Nm (G 1/4); 45 Nm (G 1/2)
Parts in contact with fluid	Stainless steel: 1.4542; 1.4571; 1.4435; 1.4404; 1.4301; 1.4548 Seal: FKM
Conduit, housing material	1.4435; 1.4404
Output data	
Output signal, permitted load resistance	4 .. 20 mA, 2-conductor $R_{Lmax} = (U_B - 8\ V) / 20\ mA\ [k\Omega]$
Accuracy acc. to DIN 16086, terminal based	≤ ± 0.25 % FS typ. ≤ ± 0.5 % FS max.
Accuracy, B.F.S.L.	≤ ± 0.15 % FS typ. ≤ ± 0.25 % FS max.
Temperature compensation Zero point	≤ ± 0.008 % FS / °C typ. ≤ ± 0.015 % FS / °C max.
Temperature compensation Span	≤ ± 0.008 % FS / °C typ. ≤ ± 0.015 % FS / °C max.
Non-linearity acc. to DIN 16086, terminal based	≤ ± 0.3 % FS max.
Hysteresis	≤ ± 0.1 % FS max.
Repeatability	≤ ± 0.05 % FS
Rise time	≤ 1.5 ms
Long-term drift	≤ ± 0.1 % FS typ. / year
Environmental conditions	
Compensated temperature range	-25 .. +85 °C
Operating/ambient temperature range [2)3)]	T6, T110 °C T_a = -40 .. +60 °C / -20 .. +60 °C T5: T_a = -40 .. +80 °C / -20 .. +80 °C
Storage temperature range	-40 .. +100 °C
Fluid temperature range [2)3)]	T6, T110 °C T_a = -40 .. +60 °C / -20 .. +60 °C T5: T_a = -40 .. +80 °C / -20 .. +80 °C
CE mark	EN 61000-6-1 / 2 / 3 / 4 EN 60079-0 / 1 / 31
Vibration resistance acc. to DIN EN 60068-2-6 at 10 .. 500 Hz	≤ 10 g
Protection class acc. to DIN EN 60529 ISO 20653	IP 65 (Vented Gauge), IP 69 (Sealed Gauge) IP 6K9K (Sealed Gauge)
Other data	
Supply voltage	8 .. 30 V DC
Residual ripple of supply voltage	≤ 5 %
Current consumption	≤ 25 mA
Life expectancy [4)]	> 10 million cycles 0 .. 100 % FS
Weight	~ 300 g

Note: Reverse polarity protection of the supply voltage, excess voltage, override and short circuit protection are provided.
FS (**F**ull **S**cale) = relative to complete measuring range
B.F.S.L. = **B**est **F**it **S**traight **L**ine

1) Other output signals on request
2) T130 °C with Ta = -40 .. +80 °C/ -20 .. +80 °C with electr. connection single lead possible
3) -20 °C with FKM seal, -40 °C on request
4) Measuring ranges ≥ 1000 bar: > 1 million cycles (0 .. 100 % FS)

Fields of application:

	Single leads Electrical connection "9"	Jacketed cable Electrical connection "G"
CSA	Explosionproof (seal not required)	
ATEX	Flameproof	
IECEx	Flameproof	
$_{c}CSA_{us}$	Class I Group A, B, C, D, T6, T5 Class II Group E, F, G Class III Type 4	
ATEX	I M2 Ex d I Mb II 2G Ex d IIC T6, T5 Gb	
	II 2D Ex tb IIIC T110 .. 130 °C Db	II 2D Ex tb IIIC T110 °C Db
IECEx	Ex d I Mb Ex d IIC T6, T5 Gb	
	Ex tb IIIC T110 .. 130 °C Db	Ex tb IIIC T110 °C Db

Model code:

HDA 4 7 X X – A – XXXX – D X – 000 (2m)

Mechanical connection
1 = G1/2 B DIN EN 837
(only for measuring ranges ≥ 1600 bar)
4 = G1/4 A ISO 1179-2

Electrical connection
9 = 1/2-14 NPT Conduit (male thread), single leads

G = 1/2-14 NPT Conduit (male thread), jacketed cable

Output signal
A = 4 .. 20 mA, 2-conductor

Measuring ranges in bar
0006; 0016; 0040; 0060; 0100; 0250; 0400; 0600; 1000
(only with mechanical connection code "4")
1600; 2000
(only with mechanical connection code "1")

Approval
D = CSA Explosionproof - Seal not required
ATEX Flameproof
IECEx Flameproof

Type of measurement cell
S = Sealed Gauge (sealed to atmosphere) ≥ 40 bar
V = Vented Gauge (vented to atmosphere) < 40 bar

Modification number
000 = standard

Cable length in m
Standard = 2 m

Dimensions:

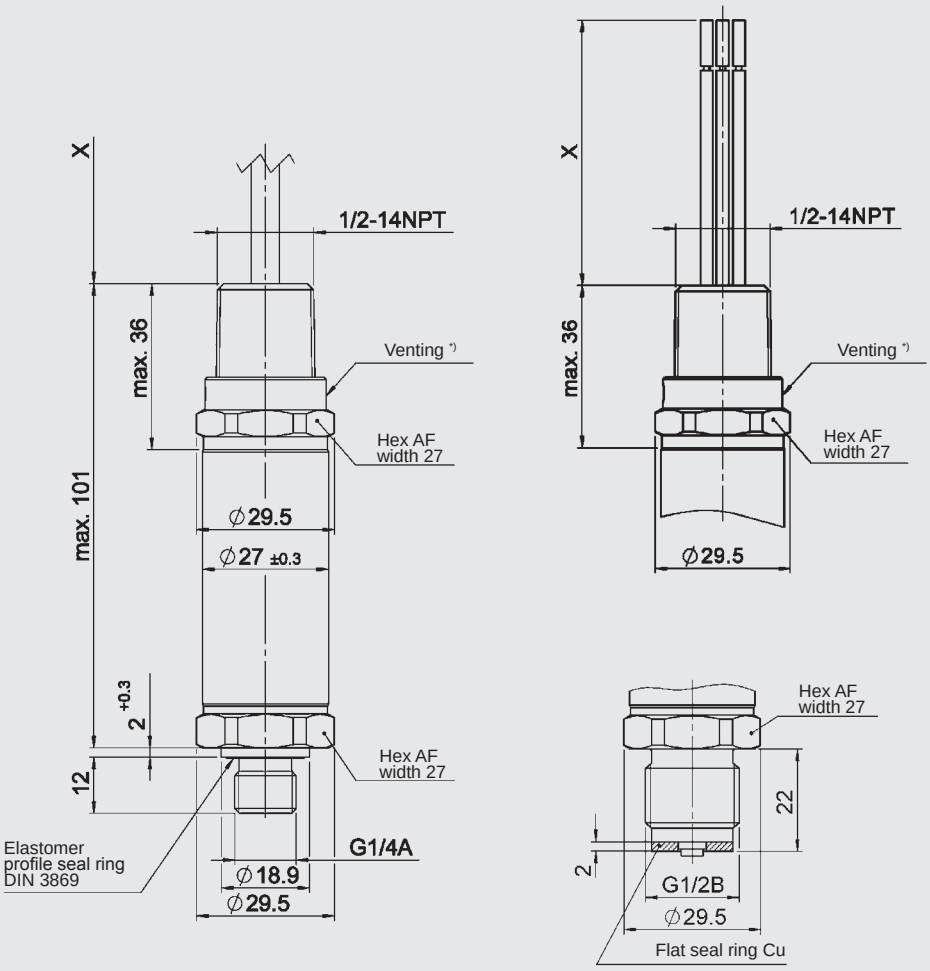

*) optional depending on type "Sealed Gauge" / "Vented Gauge"

Pin connections:

Conduit (single leads)

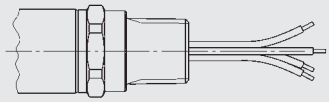

Lead	HDA 47X9-A
red	Signal +
black	Signal -
green-yellow	Housing

Conduit (jacketed cable)

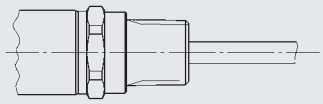

Lead	HDA 47XG-A
white	Signal -
brown	Signal +
green	n.c.
yellow	n.c.

Note:

The information in this brochure relates to the operating conditions and applications described.

For applications or operating conditions not described, please contact the relevant technical department.

Subject to technical modifications.

HYDAC ELECTRONIC GMBH
Hauptstraße 27, 66128 Saarbrücken
Germany
Telephone +49 (0)6897 509-01
Fax +49 (0)6897 509-1726
E-mail: electronic@hydac.com
Internet: www.hydac.com

Pressure Transmitter HDA 4300 Ex applications

Relative pressure | **Accuracy 0.5 %**

Intrinsically Safe
Non-Incendive
CSA approval

Description:

The pressure transmitter HDA 4300 in **CSA** version has been specially developed for the North American market for use in potentially explosive atmospheres and is based on the HDA 4000 series.

As with the industry model, the HDA 4300 in **CSA** version has a ceramic measurement cell with thick-layer strain gauge for measuring relative pressure in the low pressure range.

Intended fields of application are, for example, the oil and gas industry, on gas turbines or in locations with high levels of dust contamination, e.g. in mills.

Protection types and applications:

Intrinsically safe:

- Class I Div. 1 Group A, B, C, D T6 [C, US]
- Class I Zone 0 AEx ia IIC T6 [US]
- Ex ia IIC T6 [C]

- Class I, II, III Div. 1 Group A, B, C, D, E, F, G T6 [C, US]

Non-incendive:

- Class I Div. 2 Group A, B, C, D T4A [C, US]
- Class I Zone 2 AEx nL IIC T4 [US]
- Class I Zone 2 Ex nL IIC T4 [C]

- Class I, II, III Div. 2 Group A, B, C, D, F, G T4A [C, US]
- Class I Zone 2 AEx nA II T4 [US]
- Class I Zone 2 Ex nA II T4 [C]

Technical data:

Input data										
Measuring ranges [1]	bar	1	2.5	4	6	10	16	25	40	-1 .. 1
Overload pressures	bar	3	8	12	20	32	50	80	120	3
Burst pressure	bar	5	12	18	30	48	75	120	180	5
Mechanical connection					G1/4 A ISO 1179-2					
Tightening torque, recommended					20 Nm					
Parts in contact with fluid					Sensor: Ceramic Al203 Mech. connection: 1.4301 Seal: FKM/EPDM					
Output data										
Output signal, permitted load resistance					4 .. 20 mA, 2-conductor $R_{Lmax} = (U_B - 12\ V) / 20\ mA\ [k\Omega]$					
Accuracy acc. to DIN 16086, terminal based					≤ ± 0.5 % FS typ. ≤ ± 1.0 % FS max.					
Accuracy, B.F.S.L.					≤ ± 0.25 % FS typ. ≤ ± 0.5 % FS max.					
Temperature compensation Zero point					≤ ± 0.02 % FS / °C typ. ≤ ± 0.03 % FS / °C max.					
Temperature compensation Span					≤ ± 0.02 % FS / °C typ. ≤ ± 0.03 % FS / °C max.					
Non-linearity acc. to DIN 16086, terminal based					≤ ± 0.5 % FS max.					
Hysteresis					≤ ± 0.4 % FS max.					
Repeatability					≤ ± 0.1 % FS					
Rise time					≤ 1.5 ms					
Long-term drift					≤ ± 0.3 % FS typ. / year					
Environmental conditions										
Compensated temperature range					-25 .. +85 °C					
Operating/ambient temperature range					Intrinsically safe: T_a = -20 .. +60 °C Non-incendive: T_a = -20 .. +85 °C					
Storage temperature range					-40 .. +100 °C					
Fluid temperature range [2]					Intrinsically safe: T_a = -40 .. +60 °C / -20 .. +60 °C Non-incendive: T_a = -40 .. +85 °C / -20 .. +85 °C					
Vibration resistance acc. to DIN EN 60068-2-6 at 10 .. 500 Hz					≤ 10 g (1/2-14NPT Conduit) ≤ 20 g (male connector)					
Protection class acc. to DIN EN 60529 / NEMA [3] ISO 20653					IP 65; NEMA4 (male connector) IP6K9K (1/2-14NPT Conduit)					
Relevant data for Ex applications										
Supply voltage					12 .. 28 V DC					
Max. input current					Ii = 100 mA					
Max. input power					up to 28 V: Pi = 1 W					
Connection capacitance of the sensor					Ci ≤ 22 nF					
Inductance of the sensor					Li = 0 mH					
Insulation voltage [4]					50 V AC, with integrated overvoltage protection acc. to EN 61000-6-2					
Other data										
Residual ripple of supply voltage					≤ 5 %					
Current consumption					≤ 25 mA					
Life expectancy					> 10 million cycles, 0 .. 100 % FS					
Weight					~ 180 g; ~ 300 g (1/2-14NPT Conduit)					

Note: Reverse polarity protection of the supply voltage, excess voltage, override and short circuit protection are provided.
FS (**F**ull **S**cale) = relative to complete measuring range; **B.F.S.L.** = **B**est **F**it **S**traight **L**ine

[1] psi measuring ranges on request
[2] -20 °C with FKM or EPDM seal, -40 °C on request
[3] With mounted mating connector in corresponding protection class
[4] 500 V AC on request

Fields of application:

Group	1	2	3	4
Protection type	Intrinsically safe Gases and dusts	Intrinsically safe Gases	Non-incendive (with field wiring) Gases	Non-incendive Gases and dusts
Certificate	CSA 1760344			
Application fields	Intrinsically safe - Class I, II, III Division 1 Group A, B, C, D, E, F, G T6	Intrinsically safe - Class I Division 1 Group A, B, C, D T6 - Class I Zone 0 AEx ia IIC T6 - Ex ia IIC T6	Non-incendive - Class I Division 2 Group A, B, C, D T4A - Class I Zone 2 AEx nL IIC T4 - Class I Zone 2 Ex nL IIC T4	Non-incendive - Class I, II, III Division 2 Group A, B, C, D, F, G T4A - Class I Zone 2 Ex nA II T4 - Class I Zone 2 AEx nA II T4 IP 6x
Electrical connection	9	5, 9, A	5, 9, A	9
Code for model code	A	B		C

Model code:

HDA 4 3 4 X – A – XXXX – C N X – 000 – X 1 (2m)

Mechanical connection
4 = G1/4 A ISO 1179-2

Electrical connection
5 = male EN175301-803, 3 pole + PE
(IP67 mating connector supplied)
9 = 1/2-14 NPT Conduit (male thread),
single leads
A = male EN175301-803
3 pole + PE
(1/2" Conduit female thread)

Output signal
A = 4 .. 20 mA, 2-conductor

Measuring ranges in bar
01.0; 02.5; 04.0; 06.0; 0010; 0016; 0025; 0040;
0001(-1 .. 1)

Approval
C = CSA

Insulation voltage
N = 50 V AC to housing

Protection types and applications (code)
A = Group 1
B = Group 2 and 3
C = Group 4

Modification number
000 = standard

Sealing material (in contact with fluid)
F = FKM seal (e.g. for hydraulic oils)
E = EPDM seal (e.g. for refrigerants)

Connection material (in contact with fluid)
1 = stainless steel

Cable length in m (only for electr. connection code "9")
Standard = 2 m

Dimensions:

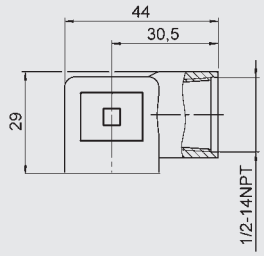

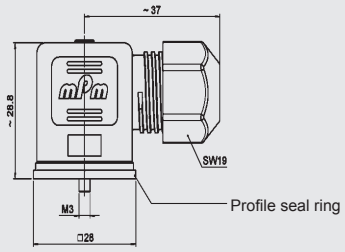

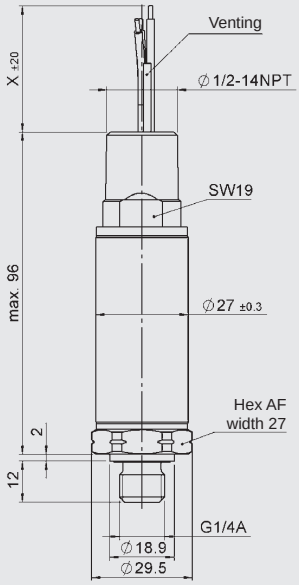

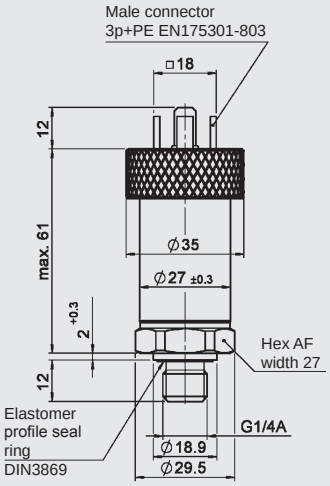

Pin connections:

Conduit (single leads)

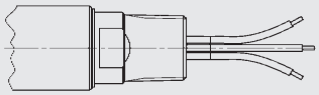

Lead	HDA 43X9-A
green	Signal +
white	Signal -
green-yellow	Housing

EN175301-803

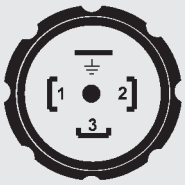

Pin	HDA 43X5-A	HDA 43XA-A
1	Signal +	Signal +
2	Signal -	Signal -
3	n.c.	n.c.
⊥	Housing	Housing

Note:

The information in this brochure relates to the operating conditions and applications described.

For applications or operating conditions not described, please contact the relevant technical department.

Subject to technical modifications.

HYDAC ELECTRONIC GMBH
Hauptstraße 27, 66128 Saarbrücken
Germany
Telephone +49 (0)6897 509-01
Fax +49 (0)6897 509-1726
E-mail: electronic@hydac.com
Internet: www.hydac.com

Pressure Transmitter HDA 4700 Ex applications

Relative pressure | **Accuracy 0.25 %**

Intrinsically Safe
Non-Incendive
CSA approval

Description:

The pressure transmitter HDA 4700 in **CSA** version has been specially developed for the North American market for use in potentially explosive atmospheres and is based on the HDA 4000 series.

As with the industry model, the HDA 4700 in **CSA** version has a very accurate and robust sensor cell with a thin-film strain gauge on a stainless steel membrane.

Intended fields of application are, for example, the oil and gas industry, on gas turbines or in locations with high levels of dust contamination, e.g. in mills.

Protection types and applications:

Intrinsically safe:

- Class I Div. 1 Group A, B, C, D T6 [C, US]
- Class I Zone 0 AEx ia IIC T6 [US]
- Ex ia IIC T6 [C]

- Class I, II, III Div. 1 Group A, B, C, D, E, F, G T6 [C, US]

Non-incendive:

- Class I Div. 2 Group A, B, C, D T4A [C, US]
- Class I Zone 2 AEx nL IIC T4 [US]
- Class I Zone 2 Ex nL IIC T4 [C]

- Class I, II, III Div. 2 Group A, B, C, D, F, G T4A [C, US]
- Class I Zone 2 AEx nA II T4 [US]
- Class I Zone 2 Ex nA II T4 [C]

Technical data:

Input data										
Measuring ranges [1]	bar	6	16	40	60	100	250	400	600	1000
Overload pressures	bar	15	32	80	120	200	500	800	1000	1600
Burst pressure	bar	100	200	200	300	500	1000	2000	2000	3000
Mechanical connection				G1/4 A ISO 1179-2						
Tightening torque, recommended				20 Nm						
Parts in contact with fluid				Stainless steel: 1.4542; 1.4571; 1.4548; 1.4435; 1.4404; 1.4301 Seal: FKM						
Output data										
Output signal, permitted load resistance				4 .. 20 mA, 2-conductor $R_{Lmax} = (U_B - 12\ V) / 20\ mA\ [k\Omega]$						
Accuracy acc. to DIN 16086, terminal based				≤ ± 0.25 % FS typ. ≤ ± 0.5 % FS max.						
Accuracy, B.F.S.L.				≤ ± 0.15 % FS typ. ≤ ± 0.25 % FS max.						
Temperature compensation Zero point				≤ ± 0.008 % FS / °C typ. ≤ ± 0.015 % FS / °C max.						
Temperature compensation Span				≤ ± 0.008 % FS / °C typ. ≤ ± 0.015 % FS / °C max.						
Non-linearity acc. to DIN 16086, terminal based				≤ ± 0.3 % FS max.						
Hysteresis				≤ ± 0.1 % FS max.						
Repeatability				≤ ± 0.05 % FS						
Rise time				≤ 1.5 ms						
Long-term drift				≤ ± 0.1 % FS typ. / year						
Environmental conditions										
Compensated temperature range				-25 .. +85 °C						
Operating/ambient temperature range [2]				Intrinsically safe: T_a = -40 .. +60 °C / -20 .. +60 °C Non-incendive: T_a = -40 .. +85 °C / -20 .. +85 °C						
Storage temperature range				-40 .. +100 °C						
Fluid temperature range [2]				Intrinsically safe: T_a = -40 .. +60 °C / -20 .. +60 °C Non-incendive: T_a = -40 .. +85 °C / -20 .. +85 °C						
Vibration resistance acc. to DIN EN 60068-2-6 at 10 .. 500 Hz				≤ 10 g (1/2-14 NPT Conduit) ≤ 20 g (male connector)						
Protection class acc. to DIN EN 60529 / NEMA[3] ISO 20653				IP 65, NEMA 4 (male connector) IP6K9K (1/2-14 NPT Conduit)						
Relevant data for Ex applications										
Supply voltage				12 .. 28 V DC						
Max. input current				Ii = 100 mA						
Max. input power				up to 28 V: Pi = 1 W						
Connection capacitance of the sensor				Ci ≤ 22 nF						
Inductance of the sensor				Li = 0 mH						
Insulation voltage [4]				50 V AC, with integrated overvoltage protection acc. to EN 61000-6-2						
Other data										
Residual ripple of supply voltage				≤ 5 %						
Current consumption				≤ 25 mA						
Life expectancy[5]				> 10 million cycles, 0 .. 100 % FS						
Weight				~ 150 g; ~ 300 g (1/2-14 NPT Conduit)						

Note: Reverse polarity protection of the supply voltage, excess voltage, override and short circuit protection are provided.
FS (**F**ull **S**cale) = relative to complete measuring range; **B.F.S.L.** = **B**est **F**it **S**traight **L**ine

[1] psi measuring ranges on request
[2] -20 °C with FKM seal, -40 °C on request
[3] With mounted mating connector in corresponding protection class
[4] 500 V AC on request
[5] Measuring range 1000 bar: > 1 million cycles (0 .. 100 % FS)

Fields of application:

Group	1	2	3	4
Protection type	Intrinsically safe Gases and dusts	Intrinsically safe Gases	Non-incendive (with field wiring) Gases	Non-incendive Gases and dusts
Certificate	CSA 1760344			
Application fields	Intrinsically safe - Class I, II, III Division 1 Group A, B, C, D, E, F, G T6	Intrinsically safe - Class I Division 1 Group A, B, C, D T6 - Class I Zone 0 AEx ia IIC T6 - Ex ia IIC T6	Non-incendive - Class I Division 2 Group A, B, C, D T4A - Class I Zone 2 AEx nL IIC T4 - Class I Zone 2 Ex nL IIC T4	Non-incendive - Class I, II, III Division 2 Group A, B, C, D, F, G T4A - Class I Zone 2 Ex nA II T4 - Class I Zone 2 AEx nA II T4 IP 6x
Electrical connection	9	5, 9, A	5, 9, A	9
Code for model code	A	B		C

Model code:

HDA 4 7 4 X – A – XXXX – C N X – 000 (2m)

Mechanical connection
4 = G1/4 A ISO 1179-2

Electrical connection
5 = male EN175301-803
3 pole + PE
(IP67 mating connector supplied)
9 = 1/2-14 NPT Conduit (male thread),
single leads
A = male EN175301-803
3 pole + PE
(1/2" Conduit female thread)

Output signal
A = 4 .. 20 mA, 2-conductor

Measuring ranges in bar
0006, 0016; 0040; 0060; 0100; 0250; 0400; 0600; 1000

Approval
C = CSA

Isolation voltage
N = 50 V AC to housing

Protection types and applications (code)
A = Group 1
B = Group 2 and 3
C = Group 4

Modification number
000 = standard

Cable length in m (only for electr. connection code "9")
Standard = 2 m

Dimensions:

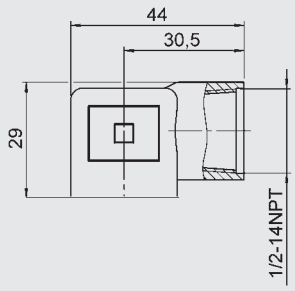

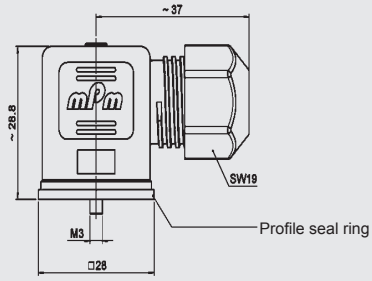

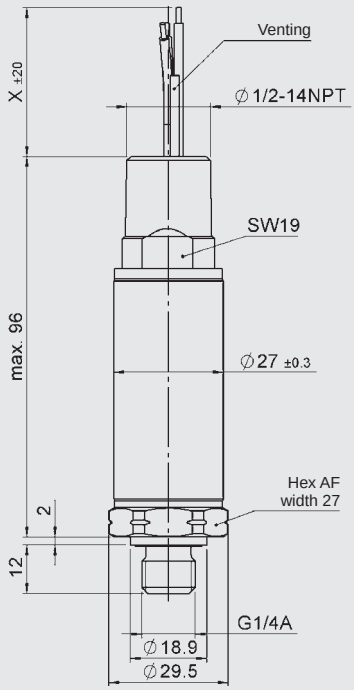

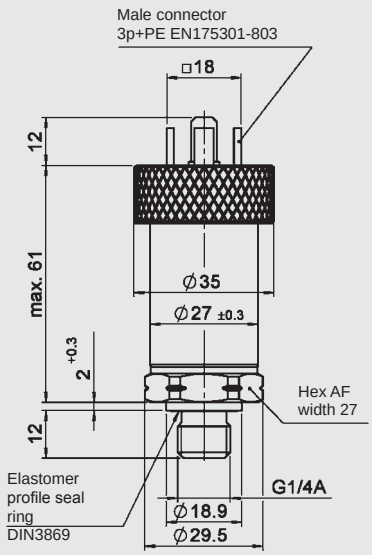

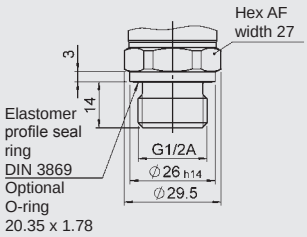

Pin connections:

Conduit (single leads)

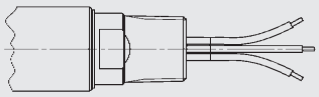

Lead	HDA 47X9-A
green	Signal +
white	Signal -
green-yellow	Housing

EN175301-803

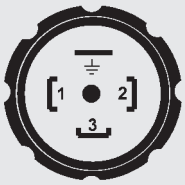

Pin	HDA 47X5-A	HDA 47XA-A
1	Signal +	Signal +
2	Signal -	Signal -
3	n.c.	n.c.
⏚	Housing	Housing

Note:

The information in this brochure relates to the operating conditions and applications described.

For applications or operating conditions not described, please contact the relevant technical department.

Subject to technical modifications.

HYDAC ELECTRONIC GMBH
Hauptstr. 27, 66128 Saarbrücken
Germany
Phone +49 (0)6897 509-01
Fax +49 (0)6897 509-1726
e-mail: electronic@hydac.com
Internet: www.hydac.com

Pressure Transmitter HDA 4300 Ex applications

Relative pressure | **Accuracy 0.5 %**

Intrinsically Safe
IECEx Australia approval

Description:

The pressure transmitter HDA 4300 IECEx intrinsically safe version has been especially developed for use in potentially explosive atmospheres and is based on the HDA 4000 series.

As with the industrial version, the HDA 4300 with IECEx intrinsically safe approval has the field-proven ceramic measurement cell with thick-layer strain gauge.

Intended fields of application are, for example, in the oil and gas industry, in mining, on gas turbines or in locations with high dust contamination, e.g. in mills.

Protection types and applications:

Ex ia I Ma

Ex ia IIC T6 Ga
Ex ia IIC T6 Ga/Gb
Ex ia IIC T6 Gb

Technical data:

Input data										
Measuring ranges	bar	1	2.5	4	6	10	16	25	40	-1 .. 1
Overload pressures	bar	3	8	12	20	32	50	80	120	3
Burst pressure	bar	5	12	18	30	48	75	120	180	5
Mechanical connection					G1/4 A ISO 1179-2					
Tightening torque, recommended					20 Nm					
Parts in contact with fluid					Sensor:			Ceramic		
					Mech. connection:			1.4301		
					Seal:			FKM/EPDM		
Output data										
Output signal, permitted load resistance					4 .. 20 mA, 2-conductor $R_{Lmax} = (U_B - 12\ V) / 20\ mA\ [k\Omega]$					
Accuracy acc. to DIN 16086, terminal based					≤ ± 0.5 % FS typ. ≤ ± 1.0 % FS max.					
Accuracy, B.F.S.L.					≤ ± 0.25 % FS typ. ≤ ± 0.5 % FS max.					
Temperature compensation Zero point					≤ ± 0.02 % FS / °C typ. ≤ ± 0.03 % FS / °C max.					
Temperature compensation Span					≤ ± 0.02 % FS / °C typ. ≤ ± 0.03 % FS / °C max.					
Non-linearity acc. to DIN 16086, terminal based					≤ ± 0.5 % FS max.					
Hysteresis					≤ ± 0.4 % FS max.					
Repeatability					≤ ± 0.1 % FS					
Rise time					≤ 1.5 ms					
Long-term drift					≤ ± 0.3 % FS typ. / year					
Environmental conditions										
Compensated temperature range					-25 .. +85 °C					
Operating/ambient temperature range					T_a = -20 .. +60 °C					
Storage temperature range					-40 .. +100 °C					
Fluid temperature range [1)2)]					T_a = -40 .. +60 °C / -20 .. +60 °C					
Vibration resistance acc. to DIN EN 60068-2-6 at 10 .. 500 Hz					≤ 20 g					
Protection class acc. to DIN EN 60529 [3)]					IP 67					
Relevant data for Ex applications										
Supply voltage					12 .. 28 V DC					
Max. input current					Ii = 100 mA					
Max. input power					Pi = 1 W					
Connection capacitance of the sensor					Ci ≤ 22 nF					
Inductance of the sensor					Li = 0 mH					
Insulation voltage [4)]					50 V AC, with integrated overvoltage protection acc. to EN 61000-6-2					
Other data										
Residual ripple of supply voltage					≤ 5 %					
Current consumption					≤ 25 mA					
Life expectancy					> 10 million cycles, 0 .. 100 % FS					
Weight					~ 180 g					

Note: Reverse polarity protection of the supply voltage, excess voltage, override and short circuit protection are provided.
FS (**F**ull **S**cale) = relative to complete measuring range
B.F.S.L. = **B**est **F**it **S**traight **L**ine

[1)] -20 °C with FKM or EPDM seal, -40 °C on request
[2)] With M12x1 male connector, only up to -25 °C
[3)] With mounted mating connector in corresponding protection class
[4)] 500 V AC on request

Fields of application:

Certificate	IECEx TSA 09.0041X		
Protection types	Ex ia I Ma	Ex ia IIC T6 Ga Ex ia IIC T6 Ga/Gb	Ex ia IIC T6 Gb
	Mining	Gases	Gases
	Protection type: intrinsically safe ia with barrier	Protection type: intrinsically safe ia with barrier	Protection type: intrinsically safe ia with barrier

Model code:

HDA 4 3 4 X – A – XXXX – I N 1 – 000 – X 1

Mechanical connection
4 = G1/4 A ISO 1179-2

Electrical connection
5 = male, EN 175301-803, 3 pole + PE (IP 67 mating connector supplied)
6 = male M12x1, 4 pole (mating connector not supplied)

Output signal
A = 4 .. 20 mA, 2-conductor

Measuring ranges in bar
01.0; 02.5; 04.0; 06.0; 0010; 0016; 0025; 0040
0001 (-1 .. 1)

Approval
I = IECEx Australia

Insulation voltage
N = 50 V AC to housing

Protection types and applications (code)
1 = Ex ia I Ma
Ex ia IIC T6 Ga
Ex ia IIC T6 Ga/Gb
Ex ia IIC T6 Gb

Modification number
000 = standard

Seal material (in contact with fluid)
F = FKM seal (e.g. for hydraulic oils)
E = EPDM seal (e.g. for refrigerants)

Connection material (in contact with fluid)
1 = stainless steel

Dimensions:

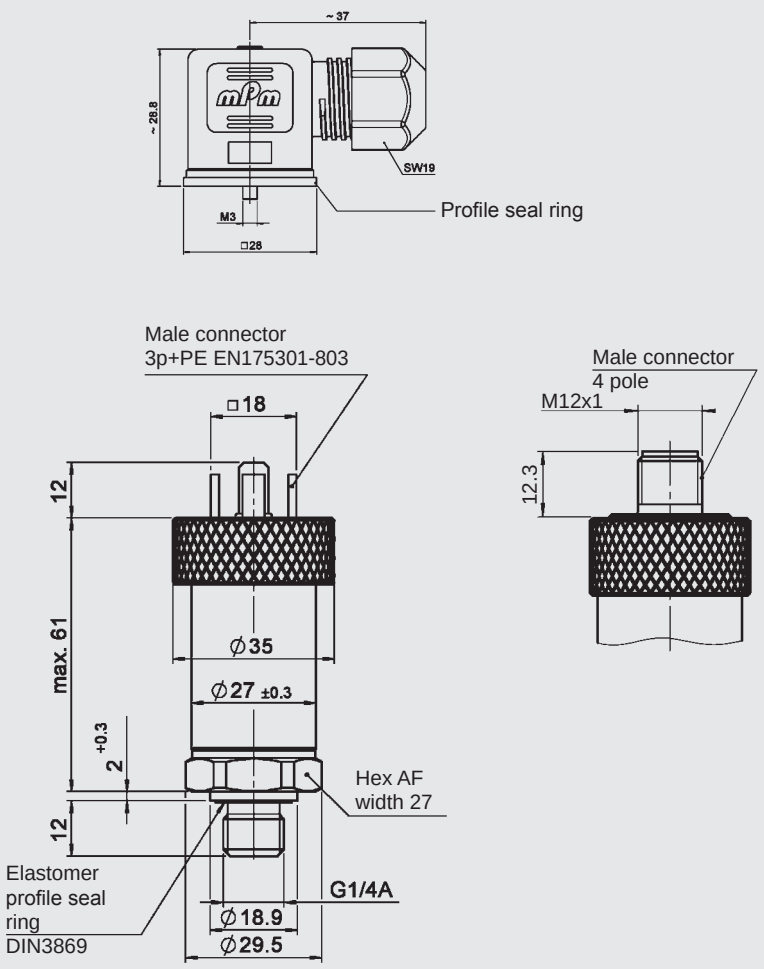

EN 175301-803

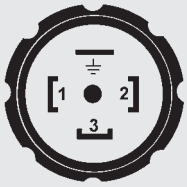

Pin	HDA 4345-A
1	Signal +
2	Signal -
3	n.c.
⊥	Housing

M12x1

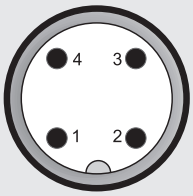

Pin	HDA 4346-A
1	Signal +
2	n.c.
3	Signal -
4	n.c.

Note:

The information in this brochure relates to the operating conditions and applications described.

For applications or operating conditions not described, please contact the relevant technical department.

Subject to technical modifications.

HYDAC ELECTRONIC GMBH
Hauptstraße 27, 66128 Saarbrücken
Germany
Telephone +49 (0)6897 509-01
Fax +49 (0)6897 509-1726
E-mail: electronic@hydac.com
Internet: www.hydac.com

Pressure Transmitter HDA 4700 Ex applications

Relative pressure | **Accuracy 0.25 %**

Intrinsically Safe
IECEx Australia approval

Description:

The pressure transmitter HDA 4700 IECEx intrinsically safe version has been especially developed for use in potentially explosive atmospheres and is based on the HDA 4000 series.

As with the industry model of the HDA 4700, devices with IECEx intrinsically safe approval have a proven, fully welded sensor cell with a thin-film strain gauge on a stainless steel membrane without internal seal.

Intended fields of application are, for example, in the oil and gas industry, in mining, on gas turbines or in locations with high dust contamination, e.g. in mills.

Protection types and applications:

Ex ia I Ma

Ex ia IIC T6 Ga
Ex ia IIC T6 Ga/Gb
Ex ia IIC T6 Gb

Technical data:

Input data										
Measuring ranges[1]	bar	6	16	40	60	100	250	400	600	1000
Overload pressures	bar	15	32	80	120	200	500	800	1000	1600
Burst pressure	bar	100	200	200	300	500	1000	2000	2000	3000
Mechanical connection				G1/4 A ISO 1179-2						
Tightening torque, recommended				20 Nm						
Parts in contact with fluid				Stainless steel:		1.4542; 1.4571; 1.4435; 1.4404; 1.4301; 1.4548				
				Seal:		FKM				
Output data										
Output signal, permitted load resistance				4 .. 20 mA, 2-conductor $R_{Lmax} = (U_B - 12\ V) / 20\ mA\ [k\Omega]$						
Accuracy acc. to DIN 16086, terminal based				≤ ± 0.25 % FS typ. ≤ ± 0.5 % FS max.						
Accuracy, B.F.S.L.				≤ ± 0.15 % FS typ. ≤ ± 0.3 % FS max.						
Temperature compensation Zero point				≤ ± 0.008 % FS / °C typ. ≤ ± 0.015 % FS / °C max.						
Temperature compensation Span				≤ ± 0.008 % FS / °C typ. ≤ ± 0.015 % FS / °C max.						
Non-linearity acc. to DIN 16086, terminal based				≤ ± 0.3 % FS max.						
Hysteresis				≤ ± 0.1 % FS max.						
Repeatability				≤ ± 0.05 % FS						
Rise time				≤ 1.5 ms						
Long-term drift				≤ ± 0.1 % FS typ. / year						
Environmental conditions										
Compensated temperature range				-25 .. +85 °C						
Operating/ambient temperature range[1)2)]				T_a = -40 .. +60 °C / -20 .. +60 °C						
Storage temperature range				-40 .. +100 °C						
Fluid temperature range [1)2)]				T_a = -40 .. +60 °C / -20 .. +60 °C						
Vibration resistance acc. to DIN EN 60068-2-6 at 10 .. 500 Hz				≤ 20 g						
Protection class acc. to DIN EN 60529[3)]				IP 67						
Relevant data for Ex applications										
Supply voltage				12 .. 28 V DC						
Max. input current				Ii = 100 mA						
Max. input power				Pi = 1 W						
Connection capacitance of the sensor				Ci ≤ 22 nF						
Inductance of the sensor				Li = 0 mH						
Insulation voltage[4)]				50 V AC, with integrated overvoltage protection acc. to EN 61000-6-2						
Other data										
Residual ripple of supply voltage				≤ 5 %						
Current consumption				≤ 25 mA						
Life expectancy[5)]				> 10 million cycles (0 .. 100 % FS)						
Weight				~ 150 g						

Note: Reverse polarity protection of the supply voltage, excess voltage, override and short circuit protection are provided.
FS (**F**ull **S**cale) = relative to complete measuring range
B.F.S.L. = **B**est **F**it **S**traight **L**ine

[1)] -20 °C with FKM seal, -40 °C on request
[2)] With M12x1 male connector, only up to -25 °C
[3)] With mounted mating connector in corresponding protection class
[4)] 500 V AC on request
[5)] Measuring range 1000 bar: > 1 million cycles (0 .. 100 % FS)

Fields of application:

Certificate	IECEx TSA 09.0041X		
Protection types	Ex ia I Ma	Ex ia IIC T6 Ga Ex ia IIC T6 Ga/Gb	Ex ia IIC T6 Gb
	Mining	Gases	Gases
	Protection type: intrinsically safe ia with barrier	Protection type: intrinsically safe ia with barrier	Protection type: intrinsically safe ia with barrier

Model code:

HDA 4 7 4 X – A – XXXX – I N 1 – 000

Mechanical connection
4 = G1/4 A ISO 1179-2

Electrical connection
5 = male, EN175301-803, 3 pole + PE (IP 67 mating connector supplied)
6 = male M12x1, 4 pole (mating connector not supplied)

Output signal
A = 4 .. 20 mA, 2-conductor

Measuring ranges in bar
0006; 0016; 0040; 0060; 0100; 0250; 0400; 0600; 1000

Approval
I = IECEx Australia

Insulation voltage
N = 50 V AC to housing

Protection types and applications (code)
1 = Ex ia I Ma
Ex ia IIC T6 Ga
Ex ia IIC T6 Ga/Gb
Ex ia IIC T6 Gb

Modification number
000 = standard

Dimensions:

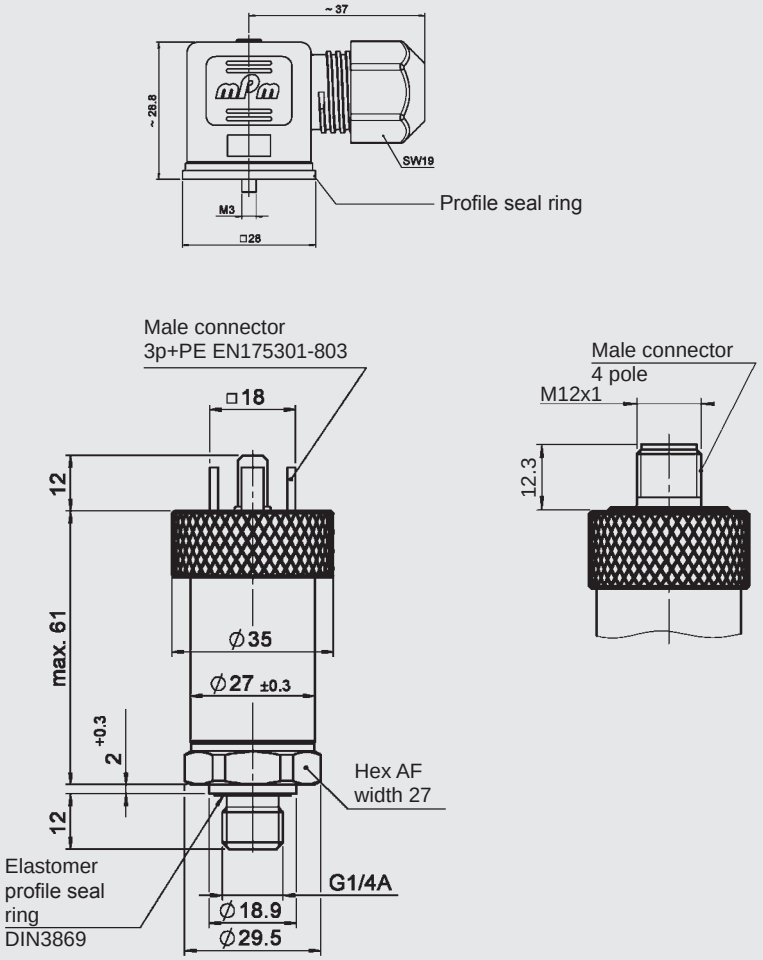

EN175301-803

Pin	HDA 4745-A
1	Signal +
2	Signal -
3	n.c.
⊥	Housing

M12x1

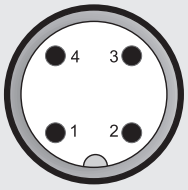

Pin	HDA 4746-A
1	Signal +
2	n.c.
3	Signal -
4	n.c.

Note:

The information in this brochure relates to the operating conditions and applications described.

For applications or operating conditions not described, please contact the relevant technical department.

Subject to technical modifications.

HYDAC ELECTRONIC GMBH
Hauptstraße 27, 66128 Saarbrücken
Germany
Telephone +49 (0)6897 509-01
Fax +49 (0)6897 509-1726
E-mail: electronic@hydac.com
Internet: www.hydac.com

Pressure Transmitter HDA 4300 Ex applications

Relative pressure | **Accuracy 0.5 %**

Intrinsically Safe, Dustproof enclosure
Non-Sparking
ATEX, IECEx, double approval

Description:

The pressure transmitter HDA 4300 is a compact pressure transmitter (intrinsically safe version) which is used to measure relative pressures in hydraulics and pneumatics. The double approval in accordance with ATEX and IECEx enables universal, almost worldwide utilisation of the devices in potentially explosive atmospheres.

As with the industry model, the ATEX/IECEx version HDA 4300 has a ceramic measurement cell with thick-layer strain gauge.

Intended fields of application are, for example, in the oil and gas industry, in mining, on gas turbines or in locations with high dust contamination, e.g. in mills.

Protection types and applications:

ATEX

I M1	Ex ia	I	Ma
II 1G	Ex ia	IIC	T6 Ga
II 1/2G	Ex ia	IIC	T6 Ga/Gb
II 2G	Ex ia	IIC	T6 Gb
II 3G	Ex nA	IIC	T6, T5, T4 Gc
II 3G	Ex ic	IIC	T6, T5, T4 Gc
II 1D	Ex ia	IIIC	T85 °C Da
II 1D	Ex ta	IIIC	T80/90/100 °C T_{500}90/ T_{500}100/T_{500}110 °C Da
II 2D	Ex tb	IIIC	T80/T90/T100 °C Db
II 3D	Ex tc	IIIC	T80/T90/T100 °C Dc
II 3D	Ex ic	IIIC	T80/T90/T100 °C Dc

IECEx

Ex ia	I	Ma
Ex ia	IIC	T6 Ga
Ex ia	IIC	T6 Ga/Gb
Ex ia	IIC	T6 Gb
Ex nA	IIC	T6,T5,T4 Gc
Ex ic	IIC	T6,T5,T4 Gc
Ex ia	IIIC	T85 °C Da
Ex ta	IIIC	T80/T90/T100 °C Da T_{500}90/ T_{500}100/T_{500}110 °C Da
Ex tb	IIIC	T80/T90/T100 °C Db
Ex tc	IIIC	T80/T90/T100 °C Dc
Ex ic	IIIC	T80/T90/T100 °C Dc

Technical data:

Input data											
Measuring ranges	bar	1	2.5	4	6	10	16	25	40	-1 .. 1	
Overload pressures	bar	3	8	12	20	32	50	80	120	3	
Burst pressure	bar	5	12	18	30	48	75	120	180	5	
Mechanical connection				G1/4 A ISO 1179-2							
Tightening torque, recommended				20 Nm							
Parts in contact with fluid				Sensor:		Ceramic					
				Mech. connection:		1.4301					
				Seal:		FKM/EPDM					
Output data											
Output signal, permitted load resistance				4 .. 20 mA, 2-conductor $R_{Lmax} = (U_B - 12\ V) / 20\ mA\ [k\Omega]$							
Accuracy acc. to DIN 16086, terminal based				≤ ± 0.5 % FS typ. ≤ ± 1 % FS max.							
Accuracy, B.F.S.L.				≤ ± 0.25 % FS typ. ≤ ± 0.5 % FS max.							
Temperature compensation Zero point				≤ ± 0.02 % FS / °C typ. ≤ ± 0.03 % FS / °C max.							
Temperature compensation Span				≤ ± 0.02 % FS / °C typ. ≤ ± 0.03 % FS / °C max.							
Non-linearity acc. to DIN 16086, terminal based				≤ ± 0.5 % FS max.							
Hysteresis				≤ ± 0.4 % FS max.							
Repeatability				≤ ± 0.1 % FS							
Rise time				≤ 1.5 ms							
Long-term drift				≤ ± 0.3 % FS typ. / year							
Environmental conditions											
Compensated temperature range				-25 .. +85 °C							
Operating/ambient temperature range				T6, T80/T85 °C, T_{500}90 °C T5, T90 °C,T_{500}100 °C T100 °C, T_{500}110 °C T4			Ta = -20 .. +60 °C Ta = -20 .. +70 °C Ta = -20 .. +80 °C Ta = -20 .. +85 °C				
Storage temperature range				-40 .. +100 °C							
Fluid temperature range [1)2)]				-40 °C .. +60 °C / -20 °C .. +60 °C							
CE mark				EN 61000-6-1 / 2 / 3 / 4; EN 60079-0 / 11 / 15 / 26 / 31 EN 50303							
Vibration resistance acc. to DIN EN 60068-2-6 at 10 .. 500 Hz				≤ 20 g							
Protection class acc. to DIN EN 60529 [3)]				IP 67							
Relevant data for Ex applications				**Ex ia, ic**		**Ex nA, ta, tb, tc**					
Supply voltage				12 .. 28 V DC		12 .. 28 V DC					
Max. input current				Ii = 100 mA							
Max. input power				Pi = 1 W		Max. power consumption ≤ 1 W					
Connection capacitance of the sensor				Ci ≤ 22 nF							
Inductance of the sensor				Li = 0 mH							
Insulation voltage[4)]				50 V AC, with integrated overvoltage protection acc. to EN 61000-6-2							
Other data											
Residual ripple of supply voltage				≤ 5 %							
Current consumption				≤ 25 mA							
Life expectancy				> 10 million cycles (0 .. 100 % FS)							
Weight				~ 150 g							

Note: Reverse polarity protection of the supply voltage, excess voltage, override and short circuit protection are provided.
FS (**F**ull **S**cale) = relative to complete measuring range
B.F.S.L. = **B**est **F**it **S**traight **L**ine

1) -20 °C with FKM seal or EPDM seal, -40 °C on request
2) With M12x1 male connector, only up to -25 °C
3) With mounted mating connector in corresponding protection class
4) 500 V AC on request

Fields of application:

Code no. for use in model code	1			9	A	C
ATEX KEMA 05 ATEX 1016X	I M1 Ex ia I Ma	II 1G Ex ia IIC T6 Ga II 1/2G Ex ia IIC T6 Ga/Gb II 1D Ex ia IIIC T85 °C Da	II 2G Ex ia IIC T6 Gb	II 3G Ex nA IIC T6, T5 Gc	II 1D Ex ta IIIC T80/T90 °C T_{500}90 °C, T_{500}100 °C Da II 2D Ex tb IIIC T80/T90 °C Db	II 3G Ex ic IIC T6, T5 Gc II 3D Ex ic IIIC T80/T90 °C Dc
IECEx KEM 08.0014X	Ex ia I Ma	Ex ia IIC T6 Ga Ex ia IIC T6 Ga/Gb Ex ia IIIC T85 °C Da	Ex ia IIC T6 Gb	Ex nA IIC T6, T5 Gc	Ex ta IIIC T80/T90 °C T_{500}90 °C, T_{500}100 °C Da Ex tb IIIC T80/T90 °C Db	Ex ic IIC T6, T5 Gc Ex ic IIIC T80/T90 °C Dc
Application fields	Mining Protection type: intrinsically safe ia with barrier	Gases/conductive dust Protection type: intrinsically safe ia with barrier	Gases Protection type: intrinsically safe ia with barrier	Gases Protection type: non-sparking nA	Conductive dust Protection type: dustproof enclosure	Gases/conductive dust Protection type: intrinsically safe ic with barrier
Electrical connection (see model code)	5, 6	5, 6	5, 6	6	6	5, 6

Instruments for other protection types and zones (see cover) are available upon request.

Model code:

HDA 4 3 4 X – A – XXXX – E N X – 000 –X 1

Mechanical connection
4 = G1/4 A ISO 1179-2

Electrical connection
5 = male, EN175301-803 , 3 pole + PE
(IP 67 mating connector supplied)
6 = male M12x1, 4 pole
(mating connector not supplied)

Output signal
A = 4 .. 20 mA, 2-conductor

Measuring ranges in bar
01.0; 02.5; 04.0; 06.0; 0010; 0016; 0025; 0040; 0001 (-1 .. 1)

Approval
E = ATEX
IECEx

Insulation voltage
N = 50 V AC to housing

Protection types and applications (code)

	ATEX	IECEx
1 =	I M1 Ex ia I Ma II 1G Ex ia IIC T6 Ga II 1/2 G Ex ia IIC T6 Ga/Gb II 2 G Ex ia IIC T6 Gb II 1D Ex ia IIIC T85 °C Da	Ex ia I Ma Ex ia IIC T6 Ga Ex ia IIC T6 Ga/Gb Ex ia IIC T6 Gb Ex ia IIIC T85 °C Da
9 =	II 3G Ex nA IIC T6, T5 Gc Only in conjunction with electr. connection "6" and the impact protection metal safety sleeve (see dimensions)	Ex nA IIC T6, T5 Gc
A =	II 1D Ex ta IIIC T80/T90 °C T_{500}90 °C, T_{500}100 °C Da II 2D Ex tb IIIC T80/T90 °C Db Only in conjunction with electr. connection "6" and the impact protection metal safety sleeve (see dimensions)	Ex ta IIIC T80/T90 °C Da T_{500}90 °C, T_{500}100 °C Da Ex tb IIIC T80/T90 °C Db
C =	II 3G Ex ic IIC T6, T5 Gc II 3D Ex ic IIIC T80/T90 °C Dc	Ex ic IIC T6, T5 Gc Ex ic IIIC T80/T90 °C Dc

Modification number
000 = standard

Sealing material (in contact with fluid)
F = FKM seal (e.g. for hydraulic oils)
E = EPDM seal (e.g. for refrigerants)

Connection material (in contact with fluid)
1 = stainless steel

Dimensions:

Protection types and applications (code): 1, C

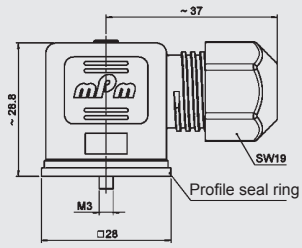

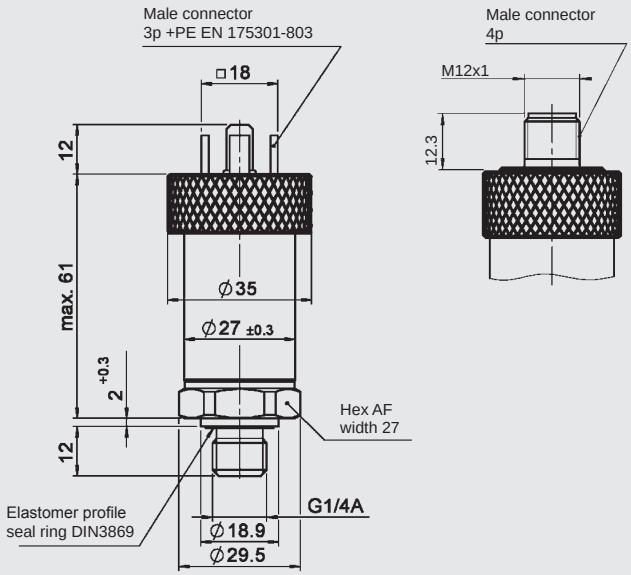

With impact protection metal safety sleeve:

Protection types and applications (code): 9, A

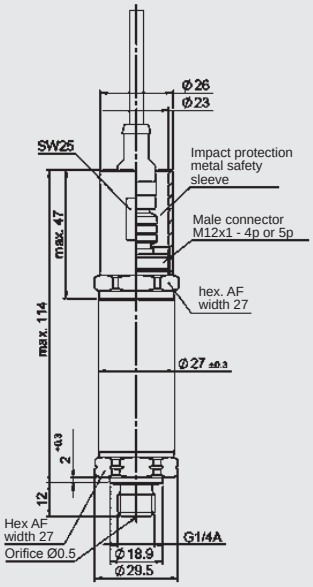

The impact protection metal safety sleeve is included. A straight mating connector is required for electrical connection. E.g. mating connector M12x1, 4 pole, straight, with 3 m shielded cable: ZBE 06S-03, part no. 6098243

Pin connections:

EN175301-803

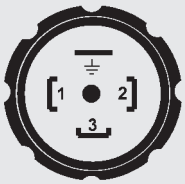

Pin	HDA 4345-A
1	Signal +
2	Signal -
3	n.c.
⊥	Housing

M12x1

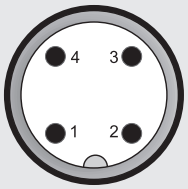

Pin	HDA 4346-A
1	Signal +
2	n.c.
3	Signal -
4	n.c.

Note:

The information in this brochure relates to the operating conditions and applications described.

For applications or operating conditions not described, please contact the relevant technical department.

Subject to technical modifications.

HYDAC ELECTRONIC GMBH
Hauptstr. 27, 66128 Saarbrücken
Germany
Phone +49 (0)6897 509-01
Fax +49 (0)6897 509-1726
e-mail: electronic@hydac.com
Internet: www.hydac.com

Pressure Transmitter HDA 4700 Ex applications

Relative pressure | **Accuracy 0.25 %**

Intrinsically Safe, Dustproof enclosure Non-Sparking
ATEX, IECEx, double approval

Description:

The HDA 4700 is a compact pressure transmitter (intrinsically safe version) which is used to measure relative pressures in hydraulics and pneumatics. The double approval in accordance with ATEX and IECEx enables universal, almost worldwide utilisation of the devices in potentially explosive atmospheres.

The pressure is measured by means of a very accurate and robust sensor with a thin-film strain gauge on a stainless steel membrane.

The main fields of application are in the oil & gas industry, gas turbines. The device is also used in mining applications as well as in locations with high dust contamination.

Protection types and applications:

ATEX

I M1	Ex ia	I	Ma
II 1G	Ex ia	IIC	T6 Ga
II 1/2G	Ex ia	IIC	T6 Ga/Gb
II 2G	Ex ia	IIC	T6 Gb
II 3G	Ex nA	IIC	T6, T5, T4 Gc
II 3G	Ex ic	IIC	T6, T5, T4 Gc
II 1D	Ex ia	IIIC	T85 °C Da
II 1D	Ex ta	IIIC	T80/90/100 °C T_{500}90/ T_{500}100/T_{500}110 °C Da
II 2D	Ex tb	IIIC	T80/T90/T100 °C Db
II 3D	Ex tc	IIIC	T80/T90/T100 °C Dc
II 3D	Ex ic	IIIC	T80/T90/T100 °C Dc

IECEx

Ex ia	I	Ma
Ex ia	IIC	T6 Ga
Ex ia	IIC	T6 Ga/Gb
Ex ia	IIC	T6 Gb
Ex nA	IIC	T6,T5,T4 Gc
Ex ic	IIC	T6,T5,T4 Gc
Ex ia	IIIC	T85 °C Da
Ex ta	IIIC	T80/T90/T100 °C Da T_{500}90/ T_{500}100/T_{500}110 °C Da
Ex tb	IIIC	T80/T90/T100 °C Db
Ex tc	IIIC	T80/T90/T100 °C Dc
Ex ic	IIIC	T80/T90/T100 °C Dc

Technical data:

Input data												
Measuring ranges	bar	6	16	40	60	100	250	400	600	1000	1600	2000
Overload pressures	bar	15	32	80	120	200	500	800	1000	1600	2400	3000
Burst pressure	bar	100	200	200	300	500	1000	2000	2000	3000	3000	4000

Mechanical connection	G1/4 A ISO 1179-2 G1/2 B DIN EN 837
Tightening torque, recommended	20 Nm (G1/4); 45 Nm (G1/2)
Parts in contact with fluid	Stainless steel: 1.4542; 1.4571; 1.4435; 1.4404; 1.4301; 1.4548 Seal: FKM
Output data	
Output signal, permitted load resistance	4 .. 20 mA, 2-conductor $R_{Lmax.} = (U_B - 12\ V) / 20\ mA\ [k\Omega]$
Accuracy acc. to DIN 16086, terminal based	≤ ± 0.25 % FS typ. ≤ ± 0.5 % FS max.
Accuracy, B.F.S.L.	≤ ± 0.15 % FS typ. ≤ ± 0.25 % FS max.
Temperature compensation Zero point	≤ ± 0.008 % FS / °C typ. ≤ ± 0.015 % FS / °C max.
Temperature compensation Span	≤ ± 0.008 % FS / °C typ. ≤ ± 0.015 % FS / °C max.
Non-linearity acc. to DIN 16086, terminal based	≤ ± 0.3 % FS max.
Hysteresis	≤ ± 0.1 % FS max.
Repeatability	≤ ± 0.05 % FS
Rise time	≤ 1.5 ms
Long-term drift	≤ ± 0.1 % FS / typ. year
Environmental conditions	
Compensated temperature range	-25 .. +85 °C
Operating/ambient temperature range [1) 2)]	T6, T80/T85 °C, T_{500}90 °C: Ta = -40 .. +60 °C/-20 .. +60 °C T5, T90 °C,T_{500}100 °C: Ta = -40 .. +70 °C/-20 .. +70 °C T100 °C, T_{500}110 °C: Ta = -40 .. +80 °C/-20 .. +80 °C T4: Ta = -40 .. +85 °C/-20 .. +85 °C
Storage temperature range	-40 .. +100 °C
Fluid temperature range [1) 2)]	Ta = -40 .. +60 °C / -20 .. +60 °C
CE mark	EN 61000-6-1/2/3/4; EN 60079-0/11/15/26/31; EN 50303
Vibration resistance acc. to DIN EN 60068-2-6 at 10 .. 500 Hz	≤ 20 g
Protection class acc. to DIN EN 60529 [3)]	IP 67

Relevant data for Ex applications	**Ex ia, ic**	**Ex nA, ta, tb, tc**
Supply voltage	12 .. 28 V DC	12 .. 28 V DC
Max. input current	Ii = 100 mA	
Max. input power	Pi = 1 W	Max. power consumption ≤ 1 W
Connection capacitance of the sensor	Ci ≤ 22 nF	
Inductance of the sensor	Li = 0 mH	
Insulation voltage [4)]	50 V AC, with integrated overvoltage protection acc. to EN 61000-6-2	

Other data	
Residual ripple of supply voltage	≤ 5 %
Current consumption	≤ 25 mA
Life expectancy [5)]	> 10 million cycles (0 .. 100 % FS)
Weight	150 g

Note: Reverse polarity protection of the supply voltage, excess voltage, override and short circuit protection are provided.
FS (**F**ull **S**cale) = relative to complete measuring range
B.F.S.L. = **B**est **F**it **S**traight **L**ine

[1)] -20 °C with FKM seal, -40 °C on request
[2)] With M12x1 male connector, only up to -25 °C
[3)] With mounted mating connector in corresponding protection class
[4)] 500 V AC on request
[5)] Measuring ranges ≥ 1000 bar: > 1 million cycles (0 .. 100 % FS)

Fields of application:

Code no. for use in model code	1			9	A	C
ATEX KEMA 05 ATEX 1016X	I M1 Ex ia I Ma	II 1G Ex ia IIC T6 Ga II 1/2G Ex ia IIC T6 Ga/Gb II 1D Ex ia IIIC T85 °C Da	II 2G Ex ia IIC T6 Gb	II 3G Ex nA IIC T6, T5 Gc	II 1D Ex ta IIIC T80/T90 °C T_{500}90 °C, T_{500}100 °C Da II 2D Ex tb IIIC T80/T90 °C Db	II 3G Ex ic IIC T6, T5 Gc II 3D Ex ic IIIC T80/T90 °C Dc
IECEx KEM 08.0014X	Ex ia I Ma	Ex ia IIC T6 Ga Ex ia IIC T6 Ga/Gb Ex ia IIIC T85 °C Da	Ex ia IIC T6 Gb	Ex nA IIC T6, T5 Gc	Ex ta IIIC T80/T90 °C T_{500}90 °C, T_{500}100 °C Da Ex tb IIIC T80/T90 °C Db	Ex ic IIC T6, T5 Gc Ex ic IIIC T80/T90 °C Dc
Application fields	Mining Protection type: intrinsically safe ia with barrier	Gases/conductive dust Protection type: intrinsically safe ia with barrier	Gases Protection type: intrinsically safe ia with barrier	Gases Protection type: non-sparking nA	Conductive dust Protection type: dustproof enclosure	Gases/conductive dust Protection type: intrinsically safe ic with barrier
Electrical connection (see model code)	5, 6	5, 6	5, 6	6	6	5, 6

Instruments for other protection types and zones (see cover) are available upon request.

Model code:

HDA 4 7 X X – A – XXXX – E N X – 000

Mechanical connection
1 = G1/2 B DIN EN 837
(only for measuring ranges ≥ 1600 bar)
4 = G1/4 A ISO 1179-2

Electrical connection
5 = male, EN 175301-803, 3 pole + PE (IP 67 mating connector supplied)
6 = male M12x1, 4 pole (mating connector not supplied)

Output signal
A = 4 .. 20 mA, 2-conductor

Measuring ranges in bar
0006; 0016; 0040; 0060; 0100;0250; 0400; 0600; 1000 (only with mechanical connection code "4")
1600; 2000 (only with mechanical connection code "1")

Approval
E = ATEX
IECEx

Insulation voltage
N = 50 V AC to housing

Protection types and applications (code)

	ATEX		IECEx	
1 =	I M1	Ex ia I Ma	Ex ia I Ma	
	II 1G	Ex ia IIC T6 Ga	Ex ia IIC T6 Ga	
	II 1/2 G	Ex ia IIC T6 Ga/Gb	Ex ia IIC T6 Ga/Gb	
	II 2 G	Ex ia IIC T6 Gb	Ex ia IIC T6 Gb	
	II 1D	Ex ia IIIC T85 °C Da	Ex ia IIIC T85 °C Da	
9 =	II 3G	Ex nA IIC T6, T5 Gc	Ex nA IIC T6, T5 Gc	
	Only in conjunction with electr. connection "6" and the impact protection metal safety sleeve (see dimensions)			
A =	II 1D	Ex ta IIIC T80/T90 °C T_{500}90 °C, T_{500}100 °C Da	Ex ta IIIC T80/T90 °C Da T_{500}90 °C, T_{500}100 °C Da	
	II 2D	Ex tb IIIC T80/T90 °C Db	Ex tb IIIC T80/T90 °C Db	
	Only in conjunction with electr. connection "6" and the impact protection metal safety sleeve (see dimensions)			
C =	II 3G	Ex ic IIC T6, T5 Gc	Ex ic IIC T6, T5 Gc	
	II 3D	Ex ic IIIC T80/T90 °C Dc	Ex ic IIIC T80/T90 °C Dc	

Modification number
000 = standard

Dimensions:

Protection types and applications (code): 1,C

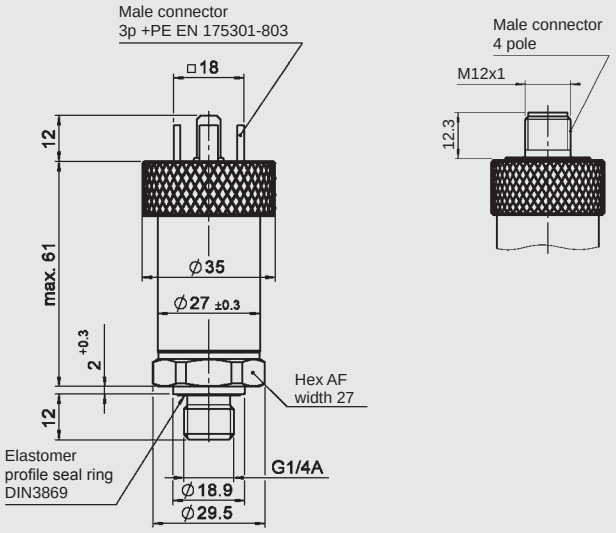

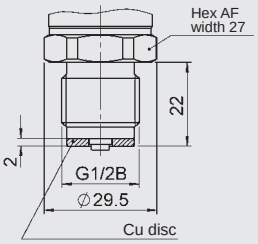

With impact protection metal safety sleeve:

Protection types and applications (code): 9, A

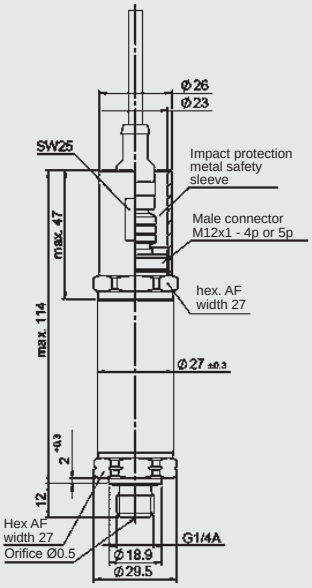

The impact protection metal safety sleeve is included. A straight mating connector is required for electrical connection. E.g. mating connector M12x1, 4 pole, straight, with 3 m shielded cable: ZBE 06S-03, part no. 6098243

Pin connections:

EN 175301-803

Pin	HDA 47x5-A
1	Signal +
2	Signal -
3	n. c.
⊥	Housing

M12x1

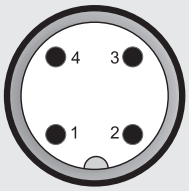

Pin	HDA 47x6-A
1	Signal +
2	n. c.
3	Signal -
4	n. c.

Note:

The information in this brochure relates to the operating conditions and applications described.

For applications or operating conditions not described, please contact the relevant technical department.

Subject to technical modifications.

HYDAC ELECTRONIC GMBH
Hauptstraße 27, 66128 Saarbrücken
Germany
Telephone +49 (0)6897 509-01
Fax +49 (0)6897 509-1726
E-mail: electronic@hydac.com
Internet: www.hydac.com

Pressure Transmitter HDA 4700 Ex applications

Relative pressure | **Accuracy 0.25 %**

Intrinsically Safe, Dustproof enclosure
Non-Sparking
ATEX, IECEx, double approval
redundant

Description:

This version of the pressure transmitter HDA 4700 has been specially developed to increase availability in units and systems in potentially explosive atmospheres.

Thanks to the use of two highly accurate and robust sensor cells with thin-film strain gauge on a stainless steel membrane in combination with redundant electronics, the device has a fully redundant architecture.

The two output signals are output in inverted form (signal 1: 4 .. 20 mA, signal 2: 20 .. 4 mA). This means that the energy in the intrinsically safe current circuit is kept low as the total current of the output signals at any pressure is 24 mA.
Connection is via a two-channel barrier.

The double approval in accordance with ATEX and IECEx enables universal, almost worldwide utilisation of the devices in potentially explosive atmospheres.

Thanks to the redundant structure, the sensor is also suitable for safety circuits/safety functions in the oil and gas industry. The device is also used in mining applications as well as in locations with high dust contamination.

Protection types and applications:

ATEX

I M1 Ex ia I Ma
II 1G Ex ia IIC T6,T5 Ga
II 1/2 G Ex ia IIC T6,T5 Ga/Gb
II 2 G Ex ia IIC T6,T5 Gb
II 1D Ex ia IIIC T85 °C/T95 °C Da
II 1D Ex ta IIIC T85/95/105 °C
T_{500}T120/ T_{500}T130/ T_{500}T140 °C Da
II 2D Ex tb IIIC T85/T95/T105 °C Db
II 3G Ex nA IIC T6, T5, T4 Gc
II 3G Ex ic IIC T6, T5, T4 Gc
II 3D Ex tc IIIC T85/T95/T105 °C Dc
II 3D Ex ic IIIC T85/T95/T105 °C Dc

IECEx

Ex ia I Ma
Ex ia IIC T6,T5 Ga
Ex ia IIC T6,T5 Ga/Gb
Ex ia IIC T6,T5 Gb
Ex ia IIIC T85/T95 °C Da
Ex ta IIIC T85/T95/T105 °C Da
T_{500}T120/ T_{500}T130/T_{500}T140 °C Da
Ex tb IIIC T85/T95/T105 °C Db
Ex nA IIC T6,T5,T4 Gc
Ex ic IIC T6,T5,T4 Gc
Ex tc IIIC T85/T95/T105 °C Dc
Ex ic IIIC T85/T95/T105 °C Dc

Technical data:

Input data								
Measuring range Signal 1	bar	40	60	100	160	250	400	600
Measuring range Signal 2	bar	40/60	60/100	100/160	160/250	250/400	400/600	600/1000
Overload pressures	bar	80	120	200	320	500	800	1200
Burst pressure	bar	200	300	500	800	1250	2000	2000

Mechanical connection	G1/4 A ISO 1179-2
Tightening torque, recommended	20 Nm
Parts in contact with fluid	Stainless steel: 1.4542; 1.4571; 1.4435; 1.4404; 1.4301; 1.4548 Seal: FKM
Housing material	1.4404
Output data	
Output signal 1 Output signal 2 Permitted load resistance, each	4 .. 20 mA, 2-conductor 20 .. 4 mA, 2-conductor R_{Lmax} = (U_B - 12 V) / 20 mA [kΩ]
Accuracy acc. to DIN 16086, terminal based	≤ ± 0.25 % FS typ. ≤ ± 0.5 % FS max.
Accuracy, B.F.S.L.	≤ ± 0.15 % FS typ. ≤ ± 0.25 % FS max.
Temperature compensation Zero point	≤ ± 0.008 % FS / °C typ. ≤ ± 0.015 % FS / °C max.
Temperature compensation Span	≤ ± 0.008 % FS / °C typ. ≤ ± 0.015 % FS / °C max.
Non-linearity acc. to DIN 16086 terminal based	≤ ± 0.3 % FS max.
Hysteresis	≤ ± 0.1 % FS max.
Repeatability	≤ ± 0.05 % FS
Rise time	≤ 2 ms
Long-term drift	≤ ± 0.1 % FS typ. / year
Environmental conditions	
Compensated temperature range	-25 .. +85 °C
Operating/ambient temperature range [1) 2)]	T6, T85 °C, T_{500}T120 °C — Ta = -25 .. 60 °C / -20 .. 60 °C T5, T95 °C, T_{500}T130 °C — Ta = -25 .. 70 °C / -20 .. 70 °C T105 °C, T_{500}T140 °C — Ta = -25 .. 80 °C / -20 .. 80 °C T4 — Ta = -25 .. 85 °C / -20 .. 85 °C
Storage temperature range	-40 .. +100 °C
Fluid temperature range [1) 2)]	T6, T85 °C, T_{500}T120 °C — Ta = -25 .. 60 °C / -20 .. 60 °C T5, T95 °C,T_{500}T130 °C — Ta = -25 .. 70 °C / -20 .. 70 °C T105 °C, T_{500}T140 °C — Ta = -25 .. 80 °C / -20 .. 80 °C T4 — Ta = -25 .. 85 °C / -20 .. 85 °C
CE mark	EN 61000-6-1/2/3/4; EN 60079-0/11/15/26/31; EN 50303
Vibration resistance acc. to DIN EN 60068-2-6 at 10 .. 500 Hz	≤ 20 g
Protection class acc. to DIN EN 60529 [3)]	IP 67

Relevant data for Ex applications	**Ex ia, ic**	**Ex nA, ta, tb, tc**
Supply voltage	12 .. 28 V DC	12 .. 28 V DC
Max. input current	Ii = 100 mA	
Max. input power	Pi = 0.7 W	Max. power consuption ≤ 1 W
Connection capacitance of the sensor	Ci ≤ 22 nF	
Inductance of the sensor	Li = 0 mH	
Intrinsic safety barrier	2-channel, R_{min} = 280 Ω (e.g. Pepperl & Fuchs Z789)	
Insulation voltage [4)]	50 V AC, with integrated overvoltage protection acc. to EN 61000-6-2	

Other data	
Residual ripple of supply voltage	≤ 5 %
Current consumption	≤ 25 mA
Life expectancy	> 10 million cycles (0 .. 100 % FS)
Weight	~ 300 g

Note: Reverse polarity protection of the supply voltage, excess voltage, override and short circuit protection are provided.
FS (**F**ull **S**cale) = relative to complete measuring range; **B.F.S.L.** = **B**est **F**it **S**traight **L**ine

1) -20 °C with FKM seal, -25 °C on request
2) With M12x1 male connector, only up to -25 °C
3) With mounted mating connector in corresponding protection class
4) 500 V AC on request

Fields of application:

Code no. for use in model code	1			9	A	C
ATEX KEMA 05 ATEX 1016X	I M1 Ex ia I Ma	II 1G Ex ia IIC T6, T5 Ga II 1/2G Ex ia IIC T6, T5 Ga/Gb II 1D Ex ia IIIC T85/T95 °C Da	II 2G Ex ia IIC T6, T5 Gb	II 3G Ex nA IIC T6, T5 Gc	II 1D Ex ta IIIC T85/T95 °C II 2D Ex tb IIIC T85/T95 °C Db	II 3G Ex ic IIC T6, T5 Gc II 3D Ex ic IIIC T85/T95 °C Dc
IECEx KEM 08.0014X	Ex ia I Ma	Ex ia IIC T6, T5 Ga Ex ia IIC T6, T5 Ga/Gb Ex ia IIIC T85/T95 °C Da	Ex ia IIC T6, T5 Gb	Ex nA IIC T6, T5 Gc	Ex ta IIIC T85/T95 °C Ex tb IIIC T85/T95 °C Db	Ex ic IIC T6, T5 Gc Ex ic IIIC T85/T95 °C Dc
Application fields	Mining Protection type: intrinsically safe ia with barrier	Gases/conductive dust Protection type: intrinsically safe ia with barrier	Gases Protection type: intrinsically safe ia with barrier	Gases Protection type: non-sparking nA	Conductive dust Protection type: dustproof enclosure	Gases/conductive dust Protection type: intrinsically safe ic with barrier

Instruments for other protection types and zones (see cover) are available upon request.

Model code:

HDA 4 7 X 6 – AA – XXXX – XXXX – E X X – 000

Mechanical connection
4 = G1/4 A ISO 1179-2

Electrical connection
6 = male M12x1, 4 pole

Output signal
AA = signal 1: 4 .. 20 mA, 2-conductor
signal 2: 20 .. 4 mA, 2-conductor

Measuring ranges signal 1 in bar (max. operating pressure)
0040; 0060; 0100; 0160; 0250; 0400; 0600

Measuring ranges signal 2 in bar
0040; 0060; 0100; 0160; 0250; 0400; 0600; 1000

Approval
E = ATEX / IECEx

Isolation voltage
N = 50 V AC to housing

Protection types and applications (code)

	ATEX	IECEx
1 =	I M1 Ex ia I Ma II 1G Ex ia IIC T6, T5 Ga II 1/2 G Ex ia IIC T6, T5 Ga/Gb II 2 G Ex ia IIC T6, T5 Gb II 1D Ex ia IIIC T85/T95 °C Da	Ex ia I Ma Ex ia IIC T6, T5 Ga Ex ia IIC T6, T5 Ga/Gb Ex ia IIC T6, T5 Gb Ex ia IIC T85/T95 °C Da
9 =	II 3G Ex nA IIC T6, T5 Gc Only in conjunction with electrical connection "6" and the impact protection metal safety sleeve (see dimensions)	Ex nA IIC T6, T5 Gc
A =	II 1D Ex ta IIIC T85/T95 °C II 2D Ex tb IIIC T85/T95 °C Db Only in conjunction with electrical connection "6" and the impact protection metal safety sleeve (see dimensions)	Ex ta IIIC T85/T95 °C Ex tb IIIC T85/T95 °C Db
C =	II 3G Ex ic IIC T6, T5 Gc II 3D Ex ic IIIC T85/T95 °C Dc	Ex ic IIC T6, T5 Gc Ex ic IIIC T85/T95 °C Dc

Modification number
000 = standard

Dimensions:

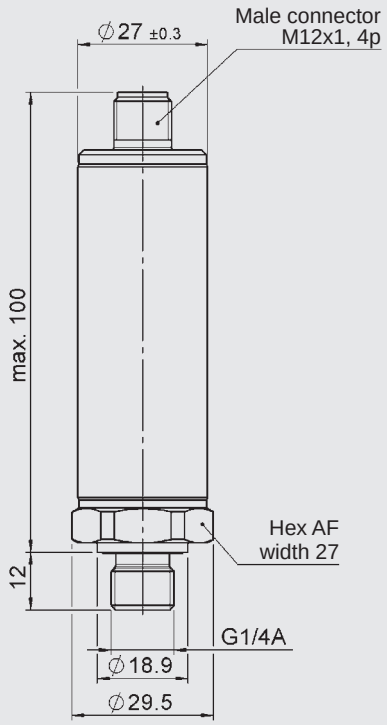

With impact protection metal safety sleeve:

Protection types and applications (code): 9, A

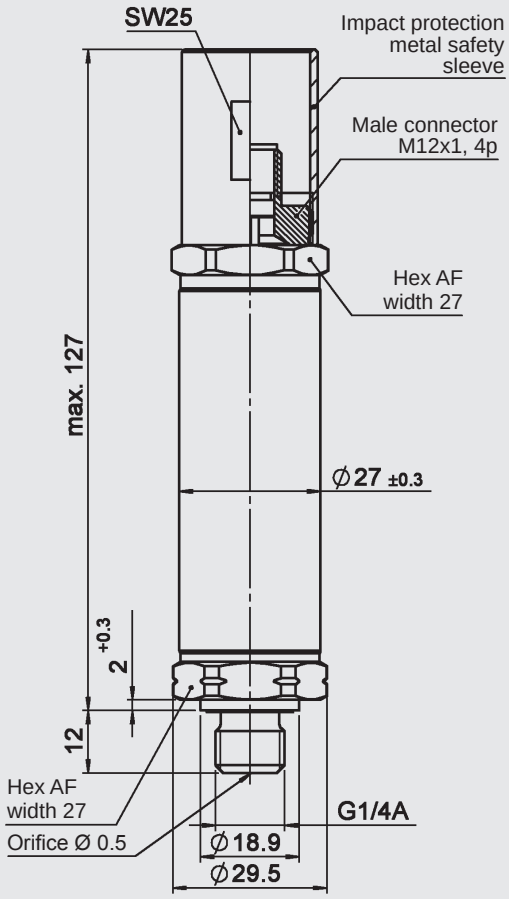

The impact protection metal safety sleeve is included. A straight mating connector is required for electrical connection. E.g. mating connector M12x1, 4 pole, straight, with 3 m shielded cable: ZBE 06S-03, part no. 6098243

Pin connections:

M12x1

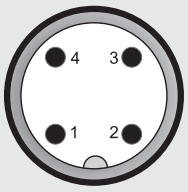

Pin	HDA 4746-AA
1	+ signal 1 (for output signal 1)
2	- signal 1 (for output signal 1)
3	+ signal 2 (for output signal 2)
4	- signal 2 (for output signal 2)

Note:

The information in this brochure relates to the operating conditions and applications described.

For applications or operating conditions not described, please contact the relevant technical department.

Subject to technical modifications.

HYDAC ELECTRONIC GMBH
Hauptstr. 27, 66128 Saarbrücken
Germany
Phone +49 (0)6897 509-01
Fax +49 (0)6897 509-1726
e-mail: electronic@hydac.com
Internet: www.hydac.com

Pressure Transmitter HDA 4400 Ex applications

Relative pressure | **Accuracy 0.5 %**

Flameproof enclosure
ATEX, IECEx, CSA, triple approval
Flush membrane

Description:

The pressure transmitter series HDA 4400 with flush membrane is certified in the ignition protection type flameproof enclosure to ATEX, IECEx and CSA. The devices have triple approval, ensuring that they are universally suitable for use in potentially explosive atmospheres around the world. Therefore it is no longer necessary to stock multiple devices with separate individual approvals.

The pressure port is achieved with a fully-sealed stainless steel front membrane filled internally with a pressure transfer fluid. The process pressure is transmitted hydrostatically to the measurement cell via the pressure transfer fluid.

This device is used for applications in which a standard pressure port could become blocked, clogged or frozen by the particular medium used. Further applications include processes where the medium changes regularly and any residues could cause mixing or contamination of the media, or in highly viscous media.

The main fields of application are in the oil & gas industry, e.g. in hydraulic power units, drill drives or valve actuation stations. The device is also used in mining applications as well as in locations with high dust contamination.

Protection types and applications:

$_{c}$CSA$_{US}$ Explosionproof - Seal not required
Class I Group A, B, C, D, T6, T5
Class II Group E, F, G
Class III
Type 4

ATEX Flameproof
I M2 Ex d I Mb
II 2G Ex d IIC T6, T5 Gb
II 2D Ex tb IIIC T110 .. 130 °C Db

IECEx Flameproof
Ex d I Mb
Ex d IIC T6, T5 Gb
Ex tb IIIC T110 .. 130 °C Db

Technical data:

Input data												
Measuring ranges	bar	4	6	10	16	25	40	100	250	400	600	-1..3
Overload pressures	bar	8	12	20	32	50	80	200	500	800	1000	8
Burst pressure	bar	20	30	50	80	125	200	500	1000	2000	2000	20
Mechanical connection [1]				G1/2 A ISO 1179-2 G1/2 with additional front O-ring seal G1/4 with additional front O-ring seal								
Tightening torque, recommended				20 Nm (G 1/4); 45 Nm (G 1/2)								
Parts in contact with fluid				Stainless steel: 1.4435; 1.4301 Seal: FKM O-ring: FKM								
Conduit, housing material				1.4435; 1.4404								
Pressure transfer fluid				Silicon-free oil								
Output data												
Output signal, permitted load resistance [2]				4 .. 20 mA, 2-conductor R_{Lmax} = (U_B - 8 V) / 20 mA [kΩ]								
Accuracy acc. to DIN 16086, terminal based				≤ ± 0.5 % FS typ. ≤ ± 1.0 % FS max.								
Accuracy, B.F.S.L.				≤ ± 0.25 % FS typ. ≤ ± 0.5 % FS max.								
Temperature compensation Zero point				≤ ± 0.015 % FS / °C typ. ≤ ± 0.025 % FS / °C max.								
Temperature compensation Span				≤ ± 0.015 % FS / °C typ. ≤ ± 0.025 % FS / °C max.								
Non-linearity acc. to DIN 16086, terminal based				≤ ± 0.3 % FS max.								
Hysteresis				≤ ± 0.4 % FS max.								
Repeatability				≤ ± 0.1 % FS								
Rise time				≤ 1.5 ms								
Long-term drift				≤ ± 0.3 % FS typ. / year								
Environmental conditions												
Compensated temperature range				-25 .. +85 °C								
Operating/ambient temperature range [3][4]				T6, T110 °C Ta = -30 .. +60 °C / -20 .. +60 °C T5 Ta = -30 .. +80 °C / -20 .. +80 °C								
Storage temperature range				-40 .. +100 °C								
Fluid temperature range [3][4]				T6, T110 °C Ta = -30 .. +60 °C / -20 .. +60 °C T5 Ta = -30 .. +80 °C / -20 .. +80 °C								
CE mark				EN 61000-6-1 / 2 / 3 / 4 EN 60079-0 / 1 / 31								
Vibration resistance acc. to DIN EN 60068-2-6 at 10 .. 500 Hz				≤ 10 g								
Protection class acc. to DIN EN 60529 ISO 20653				IP 65 (Vented Gauge), IP 69 (Sealed Gauge) IP 6K9K (Sealed Gauge)								
Other data												
Voltage supply				8 .. 30 V DC								
Residual ripple of supply voltage				≤ 5 %								
Life expectancy				> 10 million cycles, 0 .. 100 % FS								
Weight				~ 300 g								

Note: Reverse polarity protection of the supply voltage, excess voltage, override and short circuit protection are provided.
FS (**F**ull **S**cale) = relative to complete measuring range
B.F.S.L. = **B**est **F**it **S**traight **L**ine

[1] Other mechanical connections on request
[2] Other output signals on request
[3] -20 °C with FKM seal, -30 °C on request
[4] T130 °C with Ta = -30 .. +80 °C/ -20 .. +80 °C with electr. connection single lead possible

Fields of application:

	Single leads Electrical connection "9"	Jacketed cable Electrical connection "G"
CSA	Explosionproof (seal not required)	
ATEX	Flameproof	
IECEx	Flameproof	
$_{c}$CSA$_{us}$	Class I Group A, B, C, D, T6, T5 Class II Group E, F, G Class III Type 4	
ATEX	I M2 Ex d I Mb II 2G Ex d IIC T6, T5 Gb	
	II 2D Ex tb IIIC T110 .. 130 °C Db	II 2D Ex tb IIIC T110 °C Db
IECEx	Ex d I Mb Ex d IIC T6, T5 Gb	
	Ex tb IIIC T110 .. 130 °C Db	Ex tb IIIC T110 °C Db

Model code:

HDA 4 4 Z X – A – XXXX – XXX – D X – 000 (2m)

Mechanical process connection
Z = flush membrane

Electrical connection
9 = 1/2-14 NPT Conduit (male thread), single leads

G = 1/2-14 NPT Conduit (male thread), jacketed cable

Output signal
A = 4 .. 20 mA, 2-conductor

Measuring ranges in bar
04.0; 06.0; 0010; 0016; 0025; 0040; 0060; 0100; 0250; 0400; 0600
0003 (-1 .. 3)

Mechanical connection
G01 = G1/2 A ISO 1179-2
G02 = G1/2 with additional front O-ring seal
G04 = G1/4 with additional front O-ring seal (only measuring ranges 0040; 0100; 0250; 0400 and 0600)

Approval
D = CSA Explosionproof – Seal not required
ATEX Flameproof
IECEx Flameproof

Type of measurement cell
S = Sealed Gauge (sealed to atmosphere) ≥ 40 bar
V = Vented Gauge (vented to atmosphere) < 40 bar

Modification number
000 = standard

Cable length in m
Standard = 2 m

Dimensions:

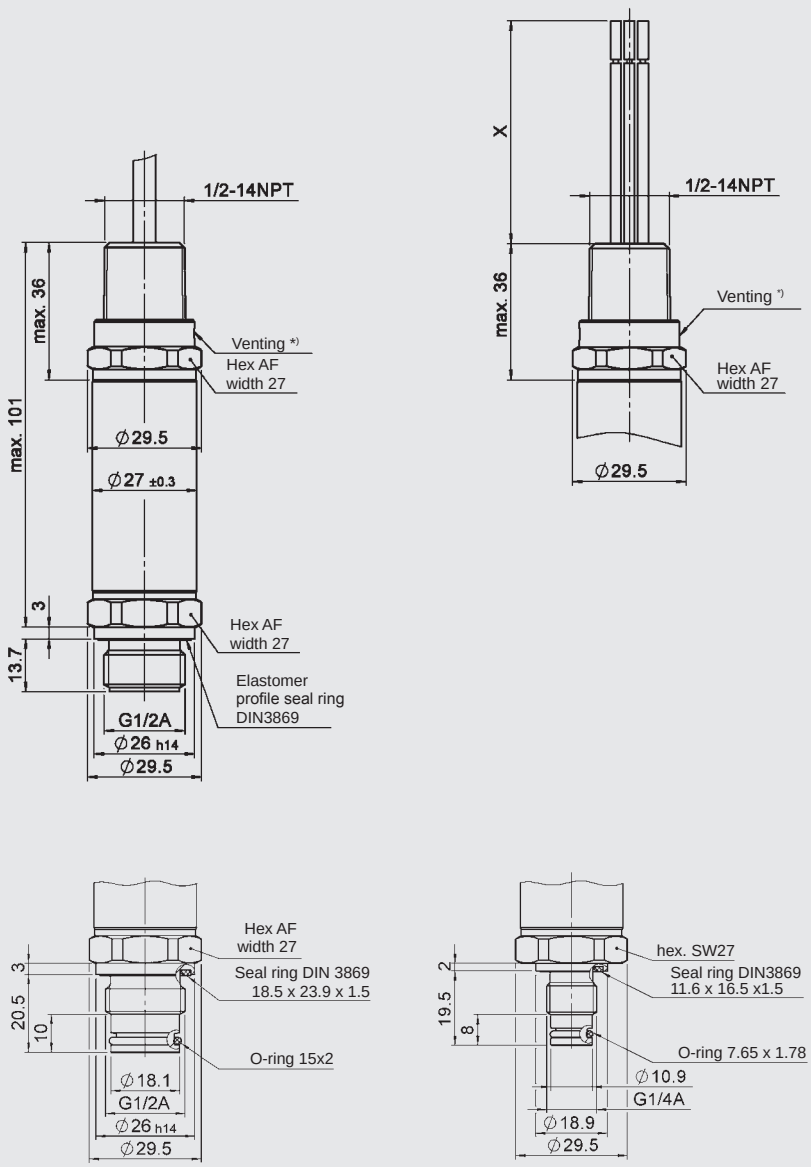

*) optional depending on type "Sealed Gauge" / "Vented Gauge"

Pin connections:

Conduit (single leads)

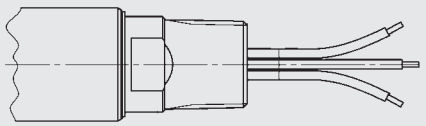

Lead	HDA 44Z9-A
red	Signal +
black	Signal -
green-yellow	Housing

Conduit (jacketed cable)

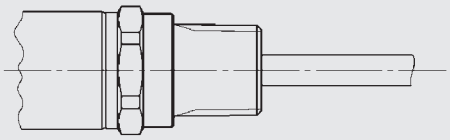

Lead	HDA 44ZG-A
white	Signal -
brown	Signal +
green	n.c.
yellow	n.c.

Note:

The information in this brochure relates to the operating conditions and applications described.

For applications or operating conditions not described, please contact the relevant technical department.

Subject to technical modifications.

HYDAC ELECTRONIC GMBH
Hauptstr. 27, 66128 Saarbrücken
Germany
Telephone +49 (0)6897 509-01
Fax +49 (0)6897 509-1726
e-mail: electronic@hydac.com
Internet: www.hydac.com

Pressure Transmitter HDA 4400 Ex applications

Relative pressure | **Accuracy 0.5 %**

Intrinsically Safe, Dustproof enclosure
Non-Sparking
ATEX, IECEx, double approval
Flush membrane

Description:

The pressure transmitter HDA 4400 in intrinsically safe version has been specially developed for use in potentially explosive atmospheres and is based on the HDA 4000 series. The double approval in accordance with ATEX and IECEx enables universal, almost worldwide utilisation of the devices.

The pressure port is achieved with a fully-sealed stainless steel front membrane filled internally with a pressure transfer fluid. The process pressure is transmitted hydrostatically to the measurement cell via the pressure transfer fluid.

This device is used for applications in which a standard pressure port could become blocked, clogged or frozen by the particular medium used or in processes where the medium changes regularly and any residues could cause mixing or contamination of the media.

Intended fields of application are, for example, in the oil and gas industry, in mining or in locations with high dust contamination, e.g. in mills.

Protection types and applications:

ATEX

I M1	Ex ia	I Ma
II 1G	Ex ia	IIC T6 Ga
II 1/2G	Ex ia	IIC T6 Ga/Gb
II 2 G	Ex ia	IIC T6 Gb
II 1D	Ex ia	IIIC T85 °C Da
II 1D	Ex ta	IIIC T80/90/100 °C T_{500}90/ T_{500}100/ T_{500}110 °C Da
II 2D	Ex tb	IIIC T80/T90/T100 °C Db
II 3G	Ex nA	IIC T6, T5, T4 Gc
II 3G	Ex ic	IIC T6, T5, T4 Gc
II 3D	Ex tc	IIIC T80/T90/T100 °C Dc
II 3D	Ex ic	IIIC T80/T90/T100 °C Dc

IECEx

Ex ia	I Ma
Ex ia	IIC T6 Ga
Ex ia	IIC T6 Ga/Gb
Ex ia	IIC T6 Gb
Ex ia	IIIC T85 °C Da
Ex ta	IIIC T80/T90/T100 °C T_{500}90/T_{500}100/T_{500}110 °C Da
Ex tb	IIIC T80/T90/T100 °C Db
Ex nA	IIC T6,T5,T4 Gc
Ex ic	IIC T6,T5,T4 Gc
Ex tc	IIIC T80/T90/T100 °C Dc
Ex ic	IIIC T80/T90/T100 °C Dc

Technical data:

Input data												
Measuring ranges	bar	4	6	10	16	25	40	100	250	400	600	-1..3
Overload pressures	bar	8	12	20	32	50	80	200	500	800	1000	8
Burst pressure	bar	20	30	50	80	125	200	500	1000	2000	2000	20

Mechanical connection	G1/2 A ISO 1179-2 G1/2 with additional front O-ring seal G1/4 with additional front O-ring seal	
Tightening torque, recommended	20 Nm (G1/4); 45 Nm (G1/2)	
Parts in contact with fluid	Stainless steel:1.4435; 1.4301 Seal: FKM, O-ring: FKM	
Pressure transfer fluid	Silicone-free oil	
Output data		
Output signal, permitted load resistance	4 .. 20 mA, 2-conductor $R_{Lmax.} = (U_B - 12\ V) / 20\ mA\ [k\Omega]$	
Accuracy acc. to DIN 16086, terminal based	≤ ± 0.5 % FS typ. ≤ ± 1.0 % FS max.	
Accuracy, B.F.S.L.	≤ ± 0.25 % FS typ. ≤ ± 0.5 % FS max.	
Temperature compensation Zero point	≤ ± 0.015 % FS / °C typ. ≤ ± 0.025 % FS / °C max.	
Temperature compensation Span	≤ ± 0.015 % FS / °C typ. ≤ ± 0.025 % FS / °C max.	
Non-linearity acc. to DIN 16086, terminal based	≤ ± 0.3 % FS max.	
Hysteresis	≤ ± 0.4 % FS max.	
Repeatability	≤ ± 0.1 % FS	
Rise time	≤ 1.5 ms	
Long-term drift	≤ ± 0.3 % FS typ. / year	
Environmental conditions		
Compensated temperature range	-25 .. +85 °C	
Operating/ambient temperature range	T6, T80/T85 °C, T_{500}90 °C T5, T90 °C,T_{500}100 °C T100 °C, T_{500}110 °C T4	Ta = -30 .. +60 °C/-20 .. +60 °C Ta = -30 .. +70 °C/-20 .. +70 °C Ta = -30 .. +80 °C/-20 .. +80 °C Ta = -30 .. +85 °C/-20 .. +85 °C
Storage temperature range	-40 .. +100 °C	
Fluid temperature range [1) 2)]	Ta = - 30 .. +60 °C / -20 .. +60 °C	
CE mark	EN 61000-6-1/2/3/4; EN 60079-0/11/15/26/31; EN 50303	
Vibration resistance acc. to DIN EN 60068-2-6 at 10 .. 500 Hz	≤ 20 g	
Protection class acc. to DIN EN 60529 [3)]	IP 67	
Relevant data for Ex applications	**Ex ia, ic**	**Ex nA, ta, tb, tc**
Supply voltage	12 .. 28 V DC	12 .. 28 V DC
Max. input current	Ii = 100 mA	
Maximum input power	Pi = 1 W	Max. power consumption ≤1W
Connection capacitance of the sensor	Ci ≤ 22 nF	
Inductance of the sensor	Li = 0 mH	
Insulation voltage [4)]	50 V AC, with integrated overvoltage protection acc. to EN 61000-6-2	
Other data		
Residual ripple of supply voltage	≤ 5 %	
Current consumption	≤ 25 mA	
Life expectancy	> 10 million cycles (0 .. 100 % FS)	
Weight	150 g	

Note: Reverse polarity protection of the supply voltage, excess voltage and short circuit protection are provided.
FS (**F**ull **S**cale) = relative to complete measuring range
B.F.S.L. = **B**est **F**it **S**traight **L**ine

[1)] -20 °C with FKM seal, -30 °C on request
[2)] With M12x1 male connector, only up to -25 °C
[3)] With mounted mating connector in corresponding protection class
[4)] 500 V AC on request

Fields of application:

Code no. for use in model code	1			9	A	C
ATEX KEMA 05 ATEX 1016X	I M1 Ex ia I Ma	II 1G Ex ia IIC T6 Ga II 1/2G Ex ia IIC T6 Ga/Gb II 1D Ex ia IIIC T85 °C Da	II 2G Ex ia IIC T6 Gb	II 3G Ex nA IIC T6, T5 Gc	II 1D Ex ta IIIC T80/T90 °C T_{500}90 °C, T_{500}100 °C Da II 2D Ex tb IIIC T80/T90 °C Db	II 3G Ex ic IIC T6, T5 Gc II 3D Ex ic IIIC T80/T90 °C Dc
IECEx KEM 08.0014X	Ex ia I Ma	Ex ia IIC T6 Ga Ex ia IIC T6 Ga/Gb Ex ia IIIC T85 °C Da	Ex ia IIC T6 Gb	Ex nA IIC T6, T5 Gc	Ex ta IIIC T80/T90 °C T_{500}90 °C, T_{500}100 °C Da Ex tb IIIC T80/T90 °C Db	Ex ic IIC T6, T5 Gc Ex ic IIIC T80/T90 °C Dc
Application fields	Mining Protection type: intrinsically safe ia with barrier	Gases/conductive dust Protection type: intrinsically safe ia with barrier	Gases Protection type: intrinsically safe ia with barrier	Gases Protection type: non-sparking nA	Conductive dust Protection type: dustproof enclosure	Gases/conductive dust Protection type: intrinsically safe ic with barrier
Electrical connection (see model code)	5, 6	5, 6	5, 6	6	6	5, 6

Instruments for other protection types and zones (see cover) are available upon request.

Model code:

HDA 4 4 Z X – A – XXXX – GXX – E N X – 000

Mechanical process connection

Z = flush membrane

Electrical connection

5 = male, EN 175301-803, 3 pole + PE (IP 67 mating connector supplied)
6 = male M12x1, 4 pole (mating connector not supplied)

Output signal

A = 4 .. 20 mA, 2-conductor

Measuring ranges in bar

04.0; 06.0; 0010; 0016; 0025; 0040; 0060; 0100; 0250; 0400; 0600
0003 (-1 .. 3)

Mechanical connection

G01 = G1/2 A ISO 1179-2
G02 = G1/2 with additional front O-ring seal
G04 = G1/4 with additional front O-ring seal (only measuring ranges 0040; 0100; 0250; 0400 and 0600)

Approval

E = ATEX
IECEx

Insulation voltage

N = 50 V AC to housing

Protection types and applications (code)

	ATEX		IECEx
1 =	I M1	Ex ia I Ma	Ex ia I Ma
	II 1G	Ex ia IIC T6 Ga	Ex ia IIC T6 Ga
	II 1/2 G	Ex ia IIC T6 Ga/Gb	Ex ia IIC T6 Ga/Gb
	II 2 G	Ex ia IIC T6 Gb	Ex ia IIC T6 Gb
	II 1D	Ex ia IIIC T85 °C Da	Ex ia IIIC T85 °C Da
9 =	II 3G	Ex nA IIC T6, T5 Gc	Ex nA IIC T6, T5 Gc
	Only in conjunction with electr. connection "6" and the impact protection metal safety sleeve (see dimensions)		
A =	II 1D	Ex ta IIIC T80/T90 °C T_{500}90 °C, T_{500}100 °C Da	Ex ta IIIC T80/T90 °C Da T_{500}90 °C, T_{500}100 °C Da
	II 2D	Ex tb IIIC T80/T90 °C Db	Ex tb IIIC T80/T90 °C Db
	Only in conjunction with electr. connection "6" and the impact protection metal safety sleeve (see dimensions)		
C =	II 3G	Ex ic IIC T6, T5 Gc	Ex ic IIC T6, T5 Gc
	II 3D	Ex ic IIIC T80/T90 °C Dc	Ex ic IIIC T80/T90 °C Dc

Modification number

000 = standard

Dimensions:

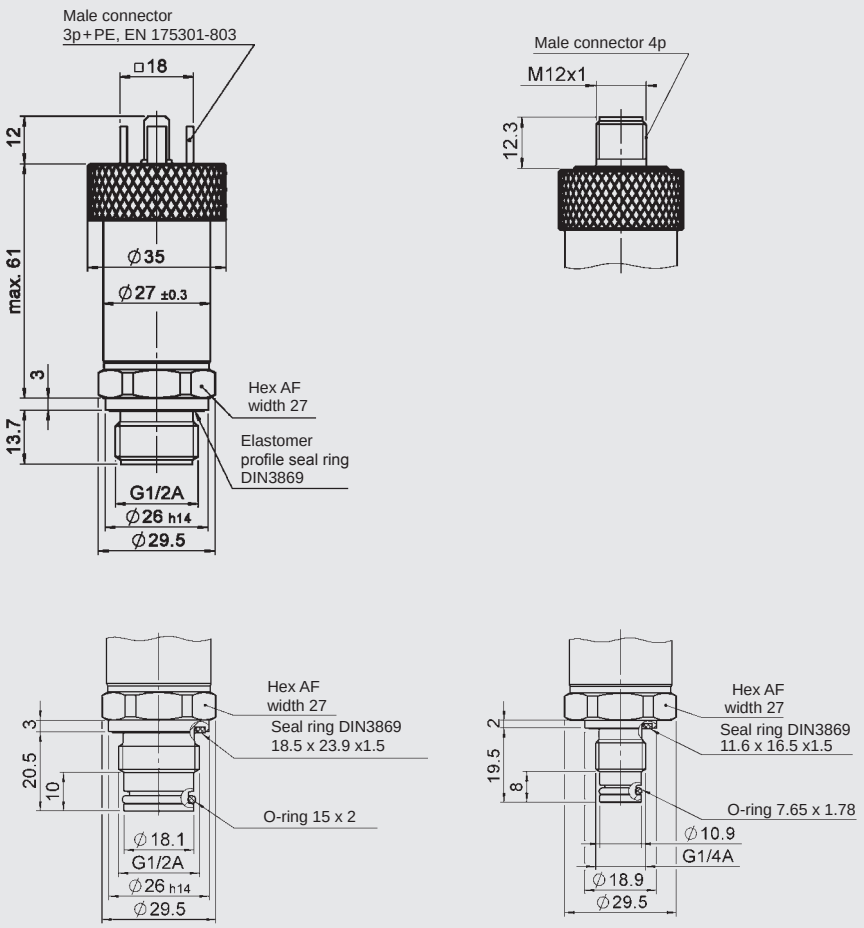

With impact protection metal safety sleeve:

Protection types and applications (code): 9, A

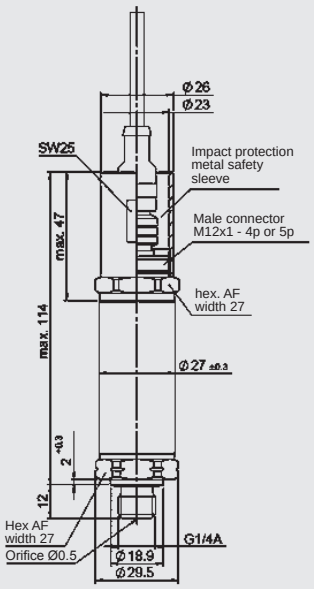

The impact protection metal safety sleeve is included. A straight mating connector is required for electrical connection. E.g. mating connector M12x1, 4 pole, straight, with 3 m shielded cable: ZBE 06S-03, part no. 6098243

Pin connections:

EN 175301-803

Pin	HDA 44Z5-A
1	Signal +
2	Signal -
3	n. c.
⊥	PE

M12x1

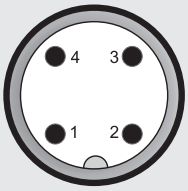

Pin	HDA 44Z6-A
1	Signal +
2	n. c.
3	Signal -
4	n. c.

Note:

The information in this brochure relates to the operating conditions and applications described.

For applications or operating conditions not described, please contact the relevant technical department.

Subject to technical modifications.

HYDAC ELECTRONIC GMBH
Hauptstr. 27, 66128 Saarbrücken
Germany
Phone +49 (0)6897 509-01
Fax +49 (0)6897 509-1726
e-mail: electronic@hydac.com
Internet: www.hydac.com

Pressure Transmitter HDA 4700 Ex applications

Relative pressure | **Accuracy 0.25 %**

Flameproof enclosure
ATEX, IECEx, CSA, triple approval
HART interface
Optional temperature measurement

Description:

HDA 4700 with HART interface is a compact pressure transmitter with flameproof enclosure which is used to measure relative pressures in hydraulics and pneumatics. The triple approval in accordance with ATEX, IECEx and CSA enables universal, worldwide utilisation of the devices in potentially explosive atmospheres.

The pressure is measured by means of a very accurate and robust sensor cell with a thin-film strain gauge on a stainless steel membrane. In addition to the analogue 4 .. 20 mA output of the measured value, digital communication is possible by means of the HART protocol.

The instrument provides the option of a temperature sensor. The temperature signal is given out as a digital signal via the HART protocol and the pressure signal is still available as an analogue signal (4 .. 20 mA).

The main fields of application are in the oil & gas industry, e.g. in hydraulic power units, drill drives or valve actuation stations. The device is also used in mining applications as well as in locations with high dust contamination.

Protection types and applications:

$_{c}$CSA$_{US}$ Explosionproof - Seal not required
Class I Group A, B, C, D, T6, T5
Class II Group E, F, G
Class III
Type 4

ATEX Flameproof
I M2 Ex d I Mb
II 2G Ex d IIC T6, T5 Gb
II 2D Ex tb IIIC T110 .. 120 °C Db

IECEx Flameproof
Ex d I Mb
Ex d IIC T6, T5 Gb
Ex tb IIIC T110 .. 120 °C Db

Technical data:

Input data												
Measuring ranges	bar	6	16	40	60	100	250	400	600	1000	1600	2000
Overload pressures	bar	12	32	80	120	200	500	800	1000	1600	2400	3000
Burst pressure	bar	100	100	200	300	500	1000	2000	2000	3000	3000	4000

Mechanical connection	G1/4 A ISO 1179-2 G1/2 B DIN EN 837
Tightening torque, recommended	20 Nm (G1/4 A), 45 Nm (G1/2 B)
Parts in contact with fluid	Stainless steel: 1.4542;1.4571; 1.4435; 1.4404; 1.4301; 1.4548 Seal: FKM
Conduit, housing material	1.4435; 1.4404
Output data	
Output signal, permitted load resistance	4 .. 20 mA, 2-conductor, with HART protocol $R_{Lmax.} = (U_B - 12\ V) / 20\ mA\ [k\Omega]$ for HART communication min. 250 Ω
HART Communication	Acc. to HART 7 specifications
HART Common Practice Commands i.e.	Altering of measuring range limits (see table) Zero point adjustment within max. 3 % of the span
Accuracy acc. to DIN 16086, terminal based	≤ ± 0.25 % FS typ. ≤ ± 0.5 % FS max.
Accuracy, B.F.S.L.	≤ ± 0.15 % FS typ. ≤ ± 0.25 % FS max.
Temperature compensation Zero point	≤ ± 0.008 % FS/°C typ. ≤ ± 0.015 % FS/°C max.
Temperature compensation Span	≤ ± 0.008 % FS/°C typ. ≤ ± 0.015 % FS/°C max.
Non-linearity acc. to DIN 16086, terminal based	≤ ± 0.3 % FS max.
Hysteresis	≤ ± 0.1 % FS max.
Repeatability	≤ ± 0.05 % FS
Rise time	≤ 25 ms
Long-term drift	≤ ± 0.1 % FS typ. / year
Environmental conditions	
Compensated temperature range	-25 .. +85 °C
Operating/ambient temperature range [1) 2)]	T6, T110 °C: Ta = -40 .. +60 °C / -20 .. +60 °C T5: Ta = -40 .. +70 °C / -20 .. +70 °C
Storage temperature range	-40 .. +100 °C
Fluid temperature range [1)2)]	T6, T110 °C: Ta = -40 .. +60 °C / -20 .. +60 °C T5: Ta = -40 .. +70 °C / -20 .. +70 °C
CE mark	EN 61000-6-1/ 2/ 3/ 4; EN 60079-0/1/31
Vibration resistance acc. to DIN EN 60068-2-6 at 10 .. 500 Hz	≤ 10 g
Protection class acc. to DIN EN 60529	IP 65 (Vented Gauge) IP 69 (Sealed Gauge)
ISO 20653	IP 6K9K (Sealed Gauge)
Other data	
Supply voltage	12 .. 30 V DC
Residual ripple of supply voltage	acc. to FSK Physical Layer Specification (HCF_SPEC-054)
Current consumption	≤ 25 mA
Life expectancy [3)]	> 10 million cycles (0 .. 100 % FS)
Weight	~ 300 g

Note: Reverse polarity protection of the supply voltage, excess voltage, override and short circuit protection provided.
FS = (**F**ull **S**cale) = relative to complete measuring range (default calibration)
B.F.S.L. = **B**est **F**it **S**traight **L**ine

[1)] -25 °C with FKM seal, -40 °C on request
[2)] T120 ° with Ta = -40 .. +70 °C/-20 .. +70 °C with electrical connection, single leads available
[3)] Measuring ranges ≥ 1000 bar: > 1 million cycles (0 .. 100 % FS)

Measuring range limits:

By means of HART Common Practice Commands, you have the opportunity to adjust the following measuring range limits:
Measuring range limits of the primary variable, pressure:

Lower measuring range limit		Upper measuring range limit		Measuring span	
min	max	min	max	min	max
0 % FS	112.5 % FS	37.5 % FS	150 % FS	37.5 % FS	150 % FS

Fields of application:

	Single leads Electrical connection "9"	Jacketed cable Electrical connection "G"
CSA **ATEX** **IECEx**	Explosionproof (seal not required) Flameproof Flameproof	
$_{c}$CSA$_{us}$	Class I Group A, B, C, D, T6, T5 Class II Group E, F, G Class III Type 4	
ATEX	I M2 Ex d I Mb II 2G Ex d IIC T6, T5 Gb	
	II 2D Ex tb IIIC T110 .. 120 °C Db	II 2D Ex tb IIIC T110 °C Db
IECEx	Ex d I Mb Ex d IIC T6, T5 Gb	
	Ex tb IIIC T110 .. 120 °C Db	Ex tb IIIC T110 °C Db

Model code:

HDA 4 7 X X – F21 – XXXX – D X – 000 (2m)

Mechanical connection
1 = G1/2 B DIN EN 837
(only for measuring ranges ≥ 1600 bar)
4 = G1/4 A ISO 1179-2

Electrical connection
9 = 1/2-14 NPT Conduit, single leads
G = 1/2-14 NPT Conduit, jacketed cable

Output signal
F21 = 4 .. 20 mA, 2-conductor, with HART protocol

Measuring ranges in bar
0006; 0016; 0040; 0060; 0100; 0250; 0400; 0600; 1000
(only with mech. connection code "4")
1600
(only with mech. connection code "1")

Approval
D = **CSA** Explosionproof (seal not required)
ATEX Flameproof
IECEx Flameproof

Type of measurement cell
S = Sealed Gauge (sealed to atmosphere) ≥ 40 bar
V = Vented Gauge (vented to atmosphere) < 40 bar

Modification number
000 = standard

Cable length in m
Standard = 2 m

Dimensions:

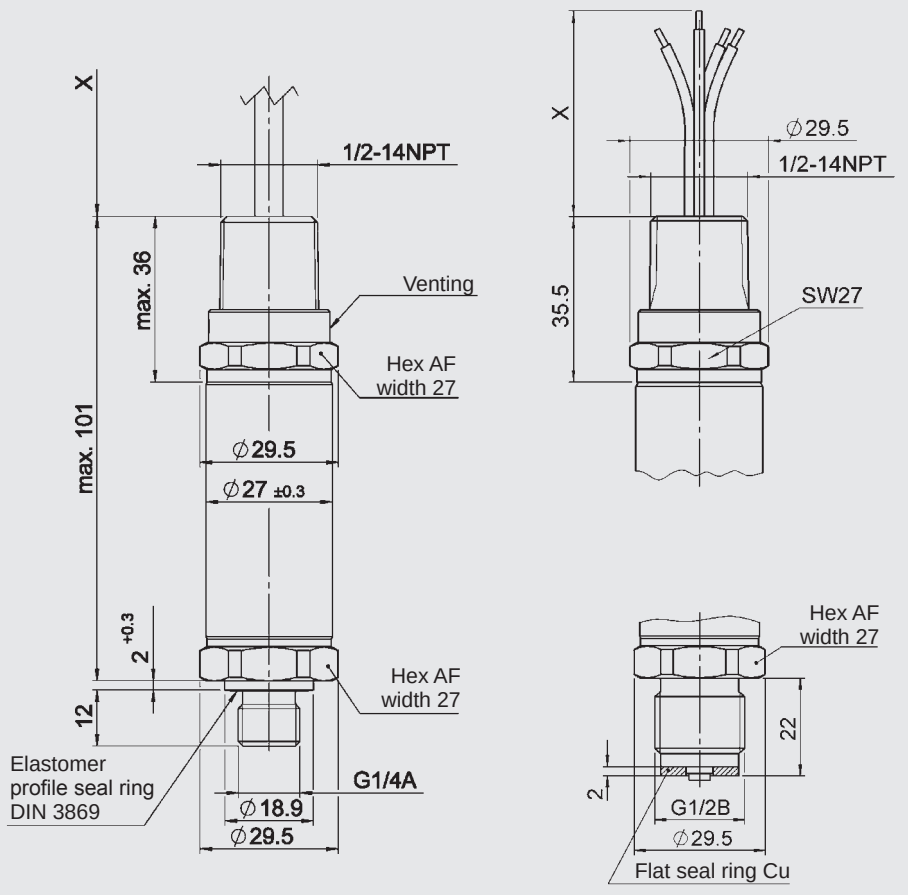

Pin connections:

Conduit (single leads)

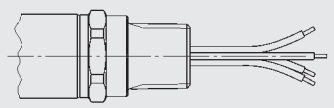

Lead	HDA 47x9
red	Signal +
black	Signal -
green-yellow	Housing

Conduit (jacketed cable)

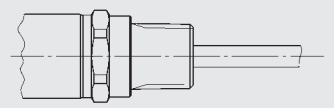

Lead	HDA 47xG
white	Signal -
brown	Signal +
green	n.c.
yellow	n.c.

Additional technical data with temperature measurement option:

Input data							
Measuring range	-25 .. +100 °C						
Probe length	7 mm						
Mechanical connection	G1/2 A ISO 1179-2 with probe						
Tightening torque, recommended	45 Nm						
Measuring ranges pressure in bar	16	40	60	100	250	400	600
Output data							
Output signal Pressure	4 .. 20 mA with HART Protocol						
Output signal Temperature	Available via HART protocol as a digital signal						
Accuracy at room temperature	≤ ± 0.4 % FS ≤ ± 0.8 % FS						
Temperature drift (environment)	≤ ± 0.01 % FS / °C						
Reaction time acc. to DIN EN 60751	t_{50}: ≈ 10 s t_{90}: ≈ 15 s						

Dimensions with temperature measurement option:

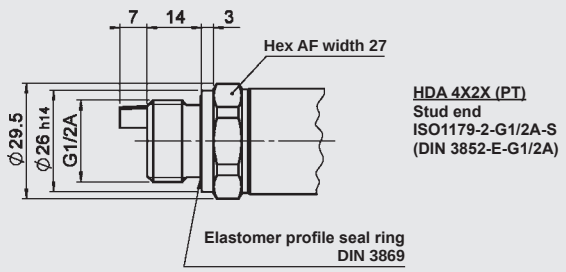

HDA 4X2X (PT)
Stud end
ISO1179-2-G1/2A-S
(DIN 3852-E-G1/2A)

Measuring range limits:

Additional measuring range limits of the secondary variable, temperature:

Lower measuring range limit		Upper measuring range limit		Measuring span	
min	max	min	max	min	max
-25 °C	75 °C	0 °C	100 °C	25 °C	125 °C

Model code with temperature measurement option:

HDA 4 7 2 X – F21 – XXXX – T – 007 – D X – 000 (2m)

Mechanical connection
2 = G1/2 A ISO 1179-2

Electrical connection
9 = 1/2-14 NPT Conduit, single leads
G = 1/2-14 NPT Conduit, jacketed cable

Output signal
F21 = 4 .. 20 mA, 2-conductor, with HART protocol

Measuring ranges in bar
0016; 0040; 0060; 0100; 0250; 0400; 0600

With temperature measurement

Probe length (in mm)
007 = 7 mm

Approval
D = **CSA** Explosionproof (seal not required)
ATEX Flameproof
IECEx Flameproof

Type of measurement cell
S = Sealed Gauge (sealed to atmosphere) ≥ 40 bar
V = Vented Gauge (vented to atmosphere) < 40 bar

Modification number
000 = standard

Cable length in m
Standard = 2 m

Note:

The information in this brochure relates to the operating conditions and applications described.

For applications or operating conditions not described, please contact the relevant technical department.

Subject to technical modifications.

HYDAC ELECTRONIC GMBH
Hauptstraße 27, 66128 Saarbrücken
Germany
Telephone +49 (0)6897 509-01
Fax +49 (0)6897 509-1726
E-mail: electronic@hydac.com
Internet: www.hydac.com

Pressure Transmitter HDA 4700 Ex applications

Relative pressure | **Accuracy 0.25 %**

Flameproof enclosure
ATEX, IECEx, CSA, triple approval
With junction box
HART interface
Optional temperature measurement

Description:

HDA 4700 with HART interface is a pressure transmitter with flameproof enclosure which is used to measure relative pressures in hydraulics and pneumatics. The triple approval in accordance with ATEX, IECEx and CSA enables universal, worldwide utilisation of the devices in potentially explosive atmospheres.

The pressure is measured by means of a very accurate and robust sensor cell with a thin-film strain gauge on a stainless steel membrane. In addition to the analogue 4 .. 20 mA output of the measured value, digital communication is possible by means of the HART protocol.

The instrument provides the option of a temperature sensor. The temperature signal is given out as a digital signal via the HART protocol and the pressure signal is still available as an analogue signal (4 .. 20 mA).

The main fields of application are in the oil & gas industry, e.g. in hydraulic power units, drill drives or valve actuation stations. The device is also used in mining applications as well as in locations with high dust contamination.

Protection types and applications:

$_{c}$CSA$_{US}$ Explosionproof - Seal not required
Class I Group B, C, D, T6, T5
Class II Group E, F, G
Class III
Type 4

ATEX Flameproof
II 2G Ex d IIC T6, T5 Gb
II 2D Ex tb IIIC T110 .. 120 °C Db

IECEx Flameproof
Ex d IIC T6, T5 Gb
Ex tb IIIC T110 .. 120 °C Db

Technical data:

Input data												
Measuring ranges	bar	6	16	40	60	100	250	400	600	1000	1600	2000
Overload pressures	bar	12	32	80	120	200	500	800	1000	1600	2400	3000
Burst pressure	bar	100	100	200	300	500	1000	2000	2000	3000	3000	4000

Mechanical connection	G1/4 A ISO 1179-2 G1/2 B DIN EN 837
Tightening torque, recommended	20 Nm (G1/4 A), 45 Nm (G1/2 A)
Parts in contact with fluid	Stainless steel: 1.4542;1.4571; 1.4435; 1.4404; 1.4301; 1.4548 Seal: FKM
Conduit, housing material	1.4435; 1.4404
Output data	
Output signal, permitted load resistance	4 .. 20 mA, 2-conductor, with HART protocol $R_{Lmax.} = (U_B - 12\ V) / 20\ mA\ [k\Omega]$ for HART communication min. 250 Ω
HART Communication	Acc. to HART 7 specifications
HART Common Practice Commands i.e.	Altering of measuring range limits (see table)
	Zero point adjustment within max. 3 % of the span
Accuracy acc. to DIN 16086 terminal based	≤ ± 0.25 % FS typ. ≤ ± 0.5 % FS max.
Accuracy, B.F.S.L.	≤ ± 0.15 % FS typ. ≤ ± 0.25 % FS max.
Temperature compensation Zero point	≤ ± 0.008 % FS/°C typ. ≤ ± 0.015 % FS/°C max.
Temperature compensation Span	≤ ± 0.008 % FS/°C typ. ≤ ± 0.015 % FS/°C max.
Non-linearity acc. to DIN 16086, terminal based	≤ ± 0.3 % FS max.
Hysteresis	≤ ± 0.1 % FS max.
Repeatability	≤ ± 0.05 % FS
Rise time	≤ 25 ms
Long-term drift	≤ ± 0.1% FS typ. / year
Environmental conditions	
Compensated temperature range	-25 .. +85 °C
Operating/ambient temperature range [1) 2)]	T6, T110 Ta = -40 .. +60 °C / -20 .. +60 °C T5 Ta = -40 .. +70 °C / -20 .. +70 °C
Storage temperature range	-40 .. +100 °C
Fluid temperature range [1) 2)]	T6, T110 Ta = -40 .. +60 °C / -20 .. +60 °C T5 Ta = -40 .. +70 °C / -20 .. +70 °C
CE mark	EN 61000-6-1/ 2/ 3/ 4; EN 60079-0/1/31
Vibration resistance acc. to DIN EN 60068-2-6 at 10 .. 500 Hz	≤ 5 g
Protection class acc. to DIN EN 60529[3)]	IP 65
Other data	
Supply voltage	12 .. 30 V DC
Residual ripple of supply voltage	acc. to FSK Physical Layer Specification (HCF_SPEC-054)
Current consumption	≤ 25 mA
Life expectancy[4)]	> 10 million cycles (0 .. 100 % FS)
Weight	~ 1000 g (aluminium junction box) ~ 1500 g (stainless steel junction box)

Note: Reverse polarity protection of the supply voltage, excess voltage and short circuit protection provided.
FS = (**F**ull **S**cale) = relative to complete measuring range (default calibration)
B.F.S.L. = **B**est **F**it **S**traight **L**ine

1) -25 °C with FKM seal, -40 °C on request
2) T120° with Ta = -40 .. +70 °C / -20 .. +70 °C with electrical connection, single leads available
3) With mounted 1/2 NPT Conduit screwed fitting in corresponding protection class at junction box
4) Measuring ranges ≥ 1000 bar: > 1 million cycles (0 .. 100 % FS)

Measuring range limits:

By means of HART Common Practice Commands, you have the opportunity to adjust the following measuring range limits:
Measuring range limits of the primary variable, pressure:

Lower measuring range limit		Upper measuring range limit		Measuring span	
min	max	min	max	min	max
0 % FS	112.5 % FS	37.5 % FS	150 % FS	37.5 % FS	150 % FS

Fields of application:

	Junction box Aluminium "J"	Junction box Stainless steel "Q"
CSA	Explosionproof (seal not required)	
ATEX	Flameproof	
IECEx	Flameproof	
$_{c}$CSA$_{us}$	Class I Group B, C, D, T6, T5 Class II Group E, F, G Class III Type 4	Class I Group B, C, D, T6, T5 Class II Group E, F, G Type 4
ATEX	II 2G Ex d IIC T6, T5 Gb II 2D Ex tb IIIC T110 .. 120 °C Db	
IECEx	Ex d IIC T6, T5 Gb Ex tb IIIC T110 .. 120 °C Db	

Model code:

HDA 4 7 X X – F21 – XXXX – D X – 000

Mechanical connection
1 = G1/2 B DIN EN 837
(only for measuring ranges ≥ 1600 bar)
4 = G1/4 A ISO 1179-2

Electrical connection
J = aluminium junction box
Q = stainless steel junction box

Output signal
F21 = 4 .. 20 mA, 2-conductor, with HART protocol

Measuring ranges in bar
0006; 0016; 0040; 0060; 0100; 0250; 0400; 0600
(only with mech. connection code "4")
1000; 1600
(only with mech. connection code "1")

Approval
D = **CSA** Explosionproof (seal not required)
ATEX Flameproof
IECEx Flameproof

Type of measurement cell
S = Sealed Gauge (sealed to atmosphere) ≥ 40 bar
V = Vented Gauge (vented to atmosphere) < 40 bar

Modification number
000 = standard

Dimensions:

With aluminium junction box:

With stainless steel junction box:

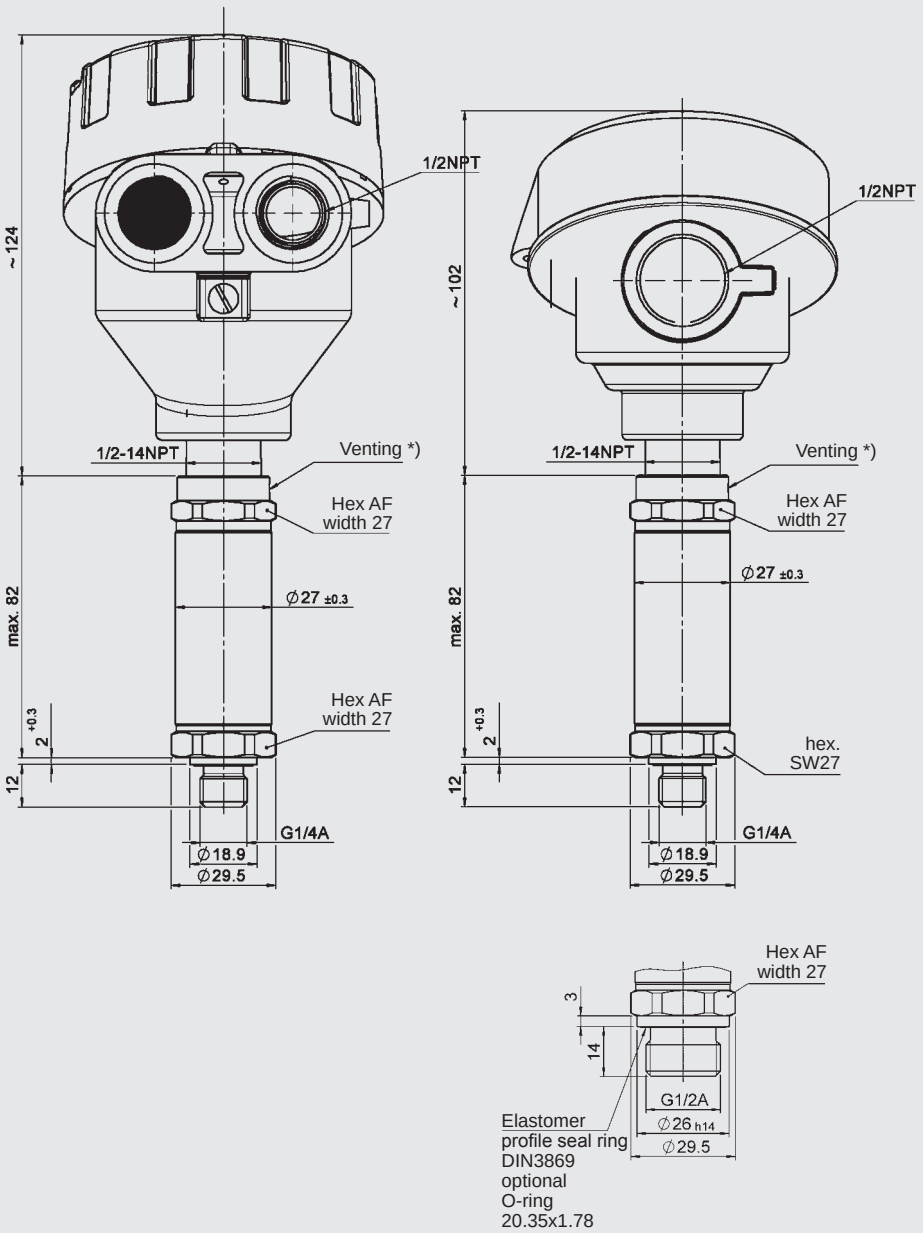

Pin connections:

Single leads in junction box

Lead	HDA 47XX
red	Signal +
black	Signal -
green-yellow	Housing

Additional technical data with temperature measurement option:

Input data							
Measuring range	-25 .. +100 °C						
Probe length	7 mm						
Mechanical connection	G1/2 A ISO 1179-2 with probe						
Tightening torque, recommended	45 Nm						
Measuring ranges pressure in bar	16	40	60	100	250	400	600
Output data							
Output signal Pressure	4 .. 20 mA with HART Protocol						
Output signal Temperature	Available via HART protocol as a digital signal						
Accuracy at room temperature	≤ ± 0.4 % FS ≤ ± 0.8 % FS						
Temperature drift (environment)	≤ ± 0.01 % FS / °C						
Reaction time acc. to DIN EN 60751	t_{50}: ≈ 10 s t_{90}: ≈ 15 s						

Dimensions with temperature measurement option:

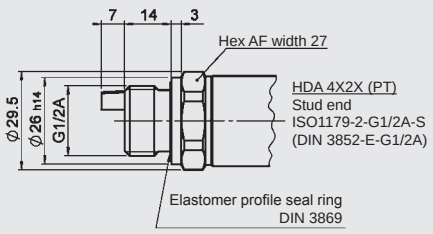

Measuring range limits:

Additional measuring range limits of the secondary variable, temperature:

Lower measuring range limit		Upper measuring range limit		Measuring span	
min	max	min	max	min	max
-25 °C	75 °C	0 °C	100 °C	25 °C	125 °C

Model code with temperature measurement option:

HDA 4 7 2 X – F21 – XXXX – T – 007 – D X – 000

Mechanical connection
2 = G1/2 A ISO 1179-2

Electrical connection
J = aluminium junction box
Q = stainless steel junction box

Output signal
F21 = 4 .. 20 mA, 2-conductor, with HART protocol

Measuring ranges in bar
0016; 0040; 0060; 0100; 0250; 0400; 0600

With temperature measurement

Probe length (in mm)
007 = 7 mm

Approval
D = **CSA** Explosionproof (seal not required)
ATEX Flameproof
IECEx Flameproof

Type of measurement cell
S = Sealed Gauge (sealed to atmosphere) ≥ 40 bar
V = Vented Gauge (vented to atmosphere) < 40 bar

Modification number
000 = standard

Note:

The information in this brochure relates to the operating conditions and applications described.

For applications or operating conditions not described, please contact the relevant technical department.

Subject to technical modifications.

HYDAC ELECTRONIC GMBH
Hauptstraße 27, 66128 Saarbrücken
Germany
Telephone +49 (0)6897 509-01
Fax +49 (0)6897 509-1726
E-mail: electronic@hydac.com
Internet: www.hydac.com

Pressure Transmitter HDA 4400 Ex applications

Relative pressure | **Accuracy 0.5 %**

Flameproof Enclosure
ATEX, IECEx, CSA, triple approval
Flush membrane
HART interface

Description:

HDA 4400 with flush membrane and HART interface is a compact pressure transmitter in the ignition protection type flameproof enclosure which is used to measure relative pressures in hydraulics and pneumatics. The triple approval in accordance with ATEX, IECEx and CSA enables universal, worldwide utilisation of the devices in potentially explosive atmospheres.

The pressure port is achieved with a fully-sealed stainless steel front membrane filled internally with a pressure transfer fluid. The process pressure is transmitted hydrostatically to the measurement cell via the pressure transfer fluid.

In addition to the analogue 4 .. 20 mA output of the measured value, digital communication is possible by means of the HART protocol.

This device is used for applications in which a standard pressure port could become blocked, clogged or frozen by the particular medium used. Further applications include processes where the medium changes regularly and any residues could cause mixing or contamination of the media, or in highly viscous media.

The main fields of application are in the oil & gas industry, e.g. in hydraulic power units, drill drives or valve actuation stations. The device is also used in mining applications as well as in locations with high dust contamination.

Protection types and applications:

cCSAus Explosionproof - Seal not required
Class I Group A, B, C, D, T6, T5
Class II Group E, F, G
Class III
Type 4

ATEX Flameproof
I M2 Ex d I Mb
II 2G Ex d IIC T6, T5 Gb
II 2D Ex tb IIIC T110 .. 120 °C Db

IECEx Flameproof
Ex d I Mb
Ex d IIC T6, T5 Gb
Ex tb IIIC T110 .. 120 °C Db

Technical data:

Input data													
Measuring ranges	bar	4	6	10	16	25	40	100	250	400	600	-1..3	
Overload pressures	bar	8	12	20	32	50	80	200	500	800	1000	8	
Burst pressure	bar	20	30	50	80	125	200	500	1000	2000	2000	20	
Mechanical connection					G1/2 A ISO 1179-2 G1/2 with additional front O-ring seal G1/4 with additional front O-ring seal								
Tightening torque, recommended					20 Nm (G 1/4); 45 Nm (G 1/2)								
Parts in contact with fluid					Stainless steel: 1.4435; 1.4301 Seal: FKM O-ring: FKM								
Conduit, housing material					1.4435; 1.4404								
Pressure transfer fluid					Silicone-free oil								
Output data													
Output signal, permitted load resistance					4 .. 20 mA with HART protocol $R_{Lmax.} = (U_B - 12\ V) / 20\ mA\ [k\Omega]$ for HART communication min. 250 Ω								
					HART communication acc. to HART 7 specifications								
					HART Common Practice Commands e.g. Altering of measuring range limits (see table), Zero point adjustment within max. 3 % of the span								
Accuracy acc. to DIN 16086, terminal based					≤ ± 0.5 % FS typ. ≤ ± 1.0 % FS max.								
Accuracy, B.F.S.L.					≤ ± 0.25 % FS typ. ≤ ± 0.5 % FS max.								
Temperature compensation Zero point					≤ ± 0.015 % FS / °C typ. ≤ ± 0.025 % FS / °C max.								
Temperature compensation Span					≤ ± 0.015 % FS / °C typ. ≤ ± 0.025 % FS / °C max.								
Non-linearity acc. to DIN 16086, terminal based					≤ ± 0.3 % FS max.								
Hysteresis					≤ ± 0.4 % FS max.								
Repeatability					≤ ± 0.1 % FS								
Rise time					≤ 25 ms								
Long-term drift					≤ ± 0.3 % FS typ. / year								
Environmental conditions													
Compensated temperature range					-25 .. +85 °C								
Operating/ambient temperature range [1) 2)]					T6, T110 °C T5			T_a = -30 .. +60 °C /-20 .. +60 °C T_a = -30 .. +70 °C /-20 .. +70 °C					
Storage temperature range					-40 .. +100 °C								
Fluid temperature range [1) 2)]					T6, T110 °C T5			T_a = -30 .. +60 °C /-20 .. +60 °C T_a = -30 .. +70 °C /-20 .. +70 °C					
CE mark					EN 61000-6-1/2/3/4; EN 60079-0/11/26/31								
Vibration resistance acc. to DIN EN 60068-2-6 at 10 .. 500 Hz					≤ 10 g								
Protection class acc. to DIN EN 60529 ISO 20653					IP 65 (Vented Gauge); IP 69 (Sealed Gauge) IP 6K9K (Sealed Gauge)								
Other data													
Supply voltage					12 .. 30 V DC								
Residual ripple of supply voltage					acc. to FSK Physical Layer Specification (HCF_SPEC-054)								
Current consumption					≤ 25 mA								
Life expectancy					> 10 million cycles (0 .. 100 % FS)								
Weight					~ 300 g								

Note: Reverse polarity protection of the supply voltage, excess voltage, override and short circuit protection provided.
FS = **F**ull **S**cale = relative to complete measuring range (default calibration)
B.F.S.L. = **B**est **F**it **S**traight **L**ine

1) -20 °C with FKM seal, -30 °C on request
2) T120 °C with T_a = -30 .. +70 °C / -20 .. +70 °C with electrical connection single leads available

Measuring range limits:

By means of HART Common Practice Commands, you have the opportunity to adjust the following measuring ranges:

Lower measuring range limit		Upper measuring range limit		Measuring span	
min	max	min	max	min	max
0 % FS	112.5 % FS	37.5 % FS	150 % FS	37.5 % FS	150 % FS

Fields of application:

	Single leads Electrical connection "9"	Jacketed cable Electrical connection "G"
CSA	Explosionproof (seal not required)	
ATEX	Flameproof	
IECEx	Flameproof	
$_{c}$CSA$_{us}$	Class I Group A, B, C, D, T6, T5 Class II Group E, F, G Class III Type 4	
ATEX	I M2 Ex d I M II 2G Ex d IIC T6, T5 Gb	
	II 2D Ex tb IIIC T110 .. 120 °C Db	II 2D Ex tb IIIC T110 °C Db
IECEx	Ex d I Mb Ex d IIC T6, T5 Gb	
	Ex tb IIIC T110 .. 120 °C Db	Ex tb IIIC T110 .. 120 °C Db

Model code:

HDA 4 4 Z X – F21 – XXXX – XXX – D X – 000 (2 m)

Mechanical process connection
Z = flush membrane

Electrical connection
9 = 1/2-14 NPT Conduit, single leads
G = 1/2-14 NPT Conduit, jacketed cable

Output signal
F21 = 4 .. 20 mA, 2-conductor with HART protocol

Measuring ranges in bar
04.0; 06.0; 0010; 0016; 0025; 0040; 0060; 0100; 0250; 0400; 0600
0003 (-1 .. 3)

Mechanical connection
G01 = G1/2 A ISO 1179-2
G02 = G1/2 with additional front O-ring seal
G04 = G1/4 with additional front O-ring seal (only measuring ranges 0040; 0100; 0250; 0400 and 0600)

Approval
D = **CSA** Explosionproof (seal not required)
ATEX Flameproof
IECEx Flameproof

Measurement cell type
S = Sealed Gauge (sealed to atmosphere) ≥ 40 bar
V = Vented Gauge (vented to atmosphere) < 40 bar

Modification number
000 = standard

Cable length in m
Standard = 2m

Dimensions:

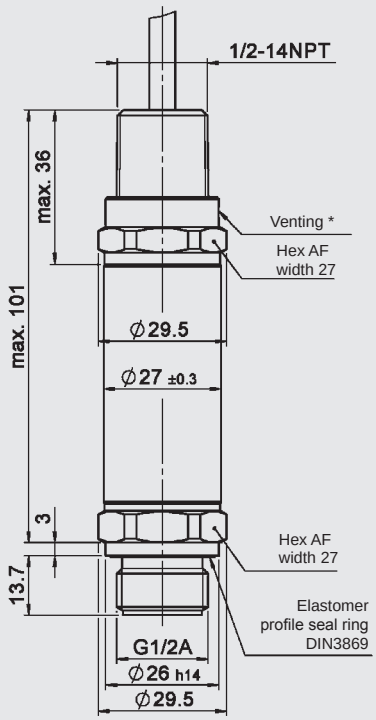

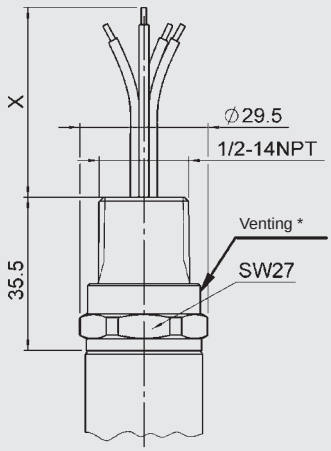

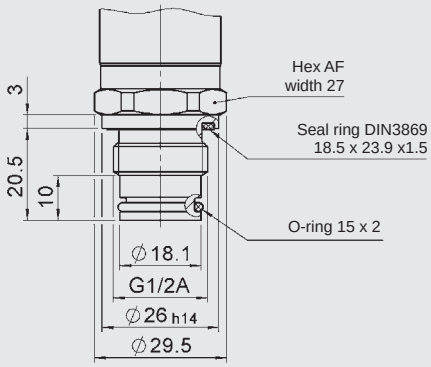

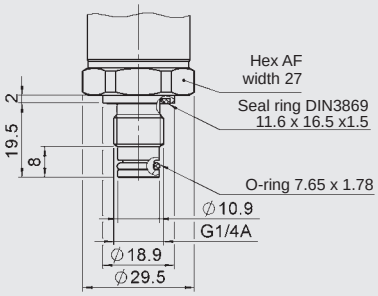

Pin connections:

Conduit (single leads)

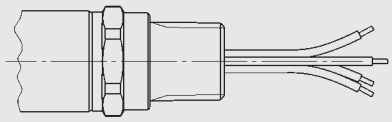

Lead	HDA 44Z9
red	Signal +
black	Signal -
green-yellow	Housing

Conduit (jacketed cable)

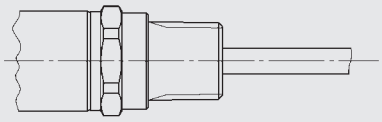

Lead	HDA 44Z9
white	Signal +
brown	Signal -
green	n. c.
yellow	n. c.

Note:

The information in this brochure relates to the operating conditions and applications described.

For applications or operating conditions not described, please contact the relevant technical department.

Subject to technical modifications.

HYDAC ELECTRONIC GMBH
Hauptstraße 27, 66128 Saarbrücken
Germany
Telephone +49 (0)6897 509-01
Fax +49 (0)6897 509-1726
E-mail: electronic@hydac.com
Internet: www.hydac.com

Pressure Transmitter HDA 4700 Ex applications

Relative pressure | **Accuracy 0.25 %**

Intrinsically Safe, Dustproof enclosure
Non-Sparking
ATEX, IECEx, double approval
HART interface
Optional temperature measurement

Description:

HDA 4700 with HART interface is a compact pressure transmitter (intrinsically safe version) which is used to measure relative pressures in hydraulics and pneumatics. The double approval in accordance with ATEX and IECEx enables universal, almost worldwide utilisation of the devices in potentially explosive atmospheres.

The pressure is measured by means of a very accurate and robust sensor cell with a thin-film strain gauge on a stainless steel membrane.

In addition to the analogue 4 .. 20 mA output of the measured value, digital communication is possible by means of the HART protocol.

The instrument provides the option of a temperature sensor. The temperature signal is given out as a digital signal via the HART protocol, the pressure signal is still available as an analogue signal (4 .. 20 mA) .

The main fields of application are in the oil and gas industry. The device is also used in mining applications as well as in locations with high dust contamination.

Protection types and applications:

ATEX

I	M1	Ex ia I Ma
II	1G	Ex ia IIC T6,T5 Ga
II	1/2 G	Ex ia IIC T6,T5 Ga/Gb
II	2 G	Ex ia IIC T6,T5 Gb
II	1D	Ex ia IIIC T85 °C/T95 °C Da
II	1D	Ex ta IIIC T80/90/100 °C T_{500}90/T_{500}100/T_{500}110 °C Da
II	2D	Ex tb IIIC T80/T90/T100 °C Db
II	3G	Ex nA IIC T6, T5, T4 Gc
II	3G	Ex ic IIC T6, T5, T4 Gc
II	3D	Ex tc IIIC T80/T90/T100 °C Dc
II	3D	Ex ic IIIC T80/T90/T100 °C Dc

IECEx

Ex ia I Ma
Ex ia IIC T6,T5 Ga
Ex ia IIC T6,T5 Ga/Gb
Ex ia IIC T6,T5 Gb
Ex ia IIIC T85/T95 °C Da
Ex ta IIIC T80/T90/T100 °C T_{500}90/T_{500}100/T_{500}110 °C Da
Ex tb IIIC T80/T90/T100 °C Db
Ex nA IIC T6,T5,T4 Gc
Ex ic IIC T6,T5,T4 Gc
Ex tc IIIC T80/T90/T100 °C Dc
Ex ic IIIC T80/T90/T100 °C Dc

Technical data:

Input data

Measuring ranges	bar	6	16	40	60	100	250	400	600	1000	1600	2000
Overload pressures	bar	12	32	80	120	200	500	800	1000	1600	2400	3000
Burst pressure	bar	100	100	200	300	500	1000	2000	2000	3000	3000	4000

Mechanical connection	G1/4 A ISO 1179-2 G1/2 B DIN EN 837
Tightening torque, recommended	20 Nm (G1/4 A), 45 Nm (G1/2 B)
Parts in contact with fluid	Stainl. steel: 1.4542; 1.4571; 1.4435; 1.4404; 1.4301, 1.4548 Seal: FKM

Output data

Output signal, permitted load resistance	4 .. 20 mA, 2-conductor, with HART protocol $R_{Lmax.} = (U_B - 12\ V) / 20\ mA\ [k\Omega]$ for HART communication min. 250 Ω
HART Communication	Acc. to HART 7 specifications
HART Common Practice Commands i.e.	Altering of measuring range limits (see table) Zero point adjustment within max. 3 % of the span
Accuracy acc. to DIN 16086, terminal based	≤ ± 0.25 % FS typ. ≤ ± 0.5 % FS max.
Accuracy, B.F.S.L.	≤ ± 0.15 % FS typ. ≤ ± 0.25 % FS max.
Temperature compensation Zero point	≤ ± 0.008 % FS / °C typ. ≤ ± 0.015 % FS / °C max.
Temperature compensation Span	≤ ± 0.008 % FS / °C typ. ≤ ± 0.015 % FS / °C max.
Non-linearity acc. to DIN 16086, terminal based	≤ ± 0.3 % FS max.
Hysteresis	≤ ± 0.1 % FS max.
Repeatability	≤ ± 0.05 % FS
Rise time	≤ 25 ms
Long-term drift	≤ ± 0.1 % FS typ. / year

Environmental conditions

Compensated temperature range	-25 .. +85 °C	
Operating/ambient/fluid temperature range [1) 2)]	T6, T80/T85 °C, T_{500}90 °C	Ta = -40 .. +60 °C/-20 .. +60 °C
	T5, T90/T95 °C, T_{500}100 °C	Ta = -40 .. +70 °C/-20 .. +70 °C
	T100 °C, T_{500}110 °C	Ta = -40 .. +80 °C/-20 .. +80 °C
	T4	Ta = -40 .. +85 °C/-20 .. +85 °C
Storage temperature range	-40 .. +100 °C	
CE mark	EN 61000-6-1/2/3/4; EN 60079-0/11/15/26/31; EN 50303	
Vibration resistance acc. to DIN EN 60068-2-6 at 10 .. 500 Hz	≤ 20 g	
Protection class acc. to DIN EN 60529	IP 67	

Relevant data for Ex applications	**Ex, ia, ic**	**Ex nA, ta, tb, tc**
Supply voltage	12 .. 28 V DC	12 .. 28 V DC
Max. input current	Ii = 100 mA	
Max. input power	Pi = 0.7 W	Max. power consuption ≤ 1 W
Connection capacitance of the sensor	Ci ≤ 22 nF	
Inductance of the sensor	Li = 0 mH	
Insulation voltage [4)]	50 V AC, with integrated overvoltage protection acc. to EN 61000-6-2	

Other data

Residual ripple of supply voltage	acc. to FSK Physical Layer Specification (HCF_SPEC-054)
Current consumption	≤ 25 mA
Life expectancy [5)]	> 10 million cycles (0 .. 100 % FS)
Weight	150 g

Note: Reverse polarity protection of the supply voltage, excess voltage, override and short circuit protection are provided.
FS (**F**ull **S**cale) = relative to complete measuring range; **B.F.S.L.** = **B**est **F**it **S**traight **L**ine

1) -25 °C with FKM seal, -40 °C on request
2) With M12x1 male connector, only up to -25 °C
3) With mounted mating connector in corresponding protection class
4) 500 V AC on request
5) Measuring ranges ≥ 1000 bar: > 1 million cycles (0 .. 100 % FS)

Measuring range limits:

By means of HART Common Practice Commands, you have the opportunity to adjust the following measuring range limits:
Measuring range limits of the primary variable, pressure:

Lower measuring range limit		Upper measuring range limit		Measuring span	
min	max	min	max	min	max
0 % FS	112.5 % FS	37.5 % FS	150 % FS	37.5 % FS	150 % FS

Fields of application:

Code no. for use in model code	1			9	A	C
ATEX DEKRA 13ATEX0031X DEKRA 13ATEX0032	I M1 Ex ia I Ma	II 1G Ex ia IIC T6,T5 Ga II 1/2G Ex ia IIC T6,T5 Ga/Gb II 1D Ex ia IIIC T85/T95°C Da	II 2G Ex ia IIC T6,T5 Gb	II 3G Ex nA IIC T6,T5 Gc	II 1D Ex ta IIIC T80/T90°C T_{500}90/T_{500}100°C Da II 2D Ex tb IIIC T80/T90°C Db	II 3G Ex ic IIC T6,T5 Gc II 3D Ex ic IIIC T80/T90°C Dc
IECEx DEK 14.0011X	Ex ia I Ma	Ex ia IIC T6,T5 Ga Ex ia IIC T6,T5 Ga/Gb Ex ia IIIC T85/T95°C Da	Ex ia IIC T6,T5 Gb	Ex nA IIC T6,T5 Gc	Ex ta IIIC T80/T90°C T_{500}T90/T_{500}T100°C Da Ex tb IIIC T80/T90°C Db	Ex ic IIC T6,T5 Gc Ex ic IIIC T80/T90°C Dc
Application fields	Mining Protection type: intrinsically safe ia with barrier	Gases/conductive dust Protection type: intrinsically safe ia with barrier	Gases Protection type: intrinsically safe ia with barrier	Gases Protection type: non-sparking nA	Conductive dust Protection type: dustproof enclosure	Gases/conductive dust Protection type: intrinsically safe ic with barrier
Electrical connection (see model code)	5.6	5.6	5.6	6	6	5.6

Instruments for other protection types and zones (see cover) are available upon request.

Model code:

HDA 4 7 X X – F21 – XXX – E N X – 000

Mechanical connection
1 = G1/2 B DIN EN 837
(only for measuring ranges ≥ 1600 bar)
4 = G1/4 A ISO 1179-2

Electrical connection
5 = male, EN 175301-803, 3 pole + PE (IP 67 mating connector supplied)
6 = male M12x1, 4 pole (mating connector not supplied)

Output signal
F21 = 4 .. 20 mA, 2-conductor, with HART protocol

Measuring ranges in bar
0006; 0016; 0040, 0060; 0100; 0250; 0400; 0600; 1000 (only with mechanical connection code "4")
1600; 2000 (only with mechanical connection code "1")

Approval
E = **ATEX**
IECEx

Insulation voltage
N = 50 V AC to housing

Protection types and applications (code)

	ATEX				IECEx		
1 =	I M1	Ex ia	I	Ma	Ex ia	I	Ma
	II 1G	Ex ia	IIC	T6,T5 Ga	Ex ia	IIC	T6,T5 Ga
	II 1/2 G	Ex ia	IIC	T6,T5 Ga/Gb	Ex ia	IIC	T6,T5 Ga/Gb
	II 2 G	Ex ia	IIC	T6,T5 Gb	Ex ia	IIC	T6,T5 Gb
	II 1D	Ex ia	IIIC	T85/T95 °C Da	Ex ia	IIIC	T85/T95 °C Da
9 =	II 3G	Ex nA	IIC	T6, T5 Gc	Ex nA	IIC	T6, T5 Gc
	Only in conjunction with electr. connection "6" and the impact protection metal safety sleeve (see dimensions)						
A =	II 1D	Ex ta	IIIC	T80/T90 °C T_{500}90/ T_{500}100 °C Da	Ex ta	IIIC	T80/T90 °C T_{500}90/ T_{500}100 °C Da
	II 2D	Ex tb	IIIC	T80/T90 °C Db	Ex tb	IIIC	T80/T90 °C Db
	Only in conjunction with electr. connection "6" and the impact protection metal safety sleeve (see dimensions)						
C =	II 3G	Ex ic	IIC	T6, T5 Gc	Ex ic	IIC	T6, T5 Gc
	II 3D	Ex ic	IIIC	T80/T90 °C Dc	Ex ic	IIIC	T80/T90 °C Dc

Modification number
000 = standard

Dimensions:

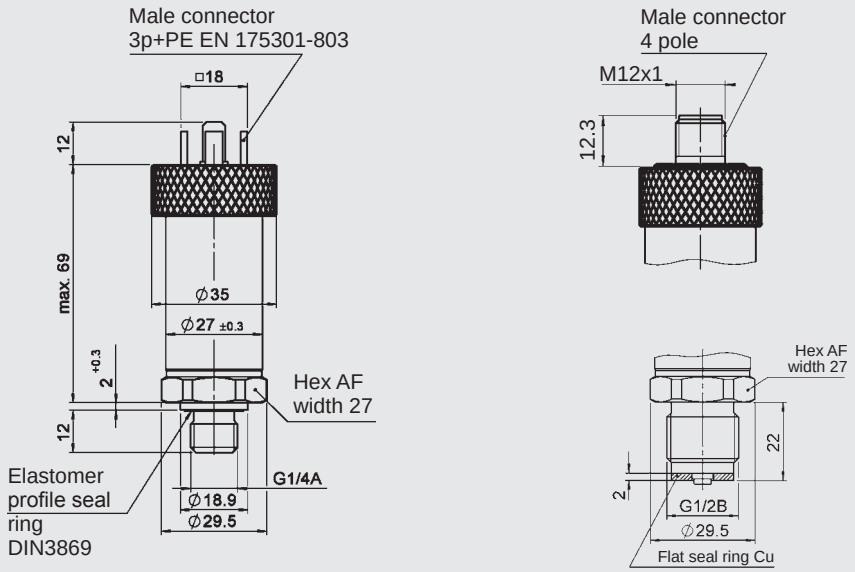

With impact protection metal safety sleeve:

Protection types and applications (code): 9, A

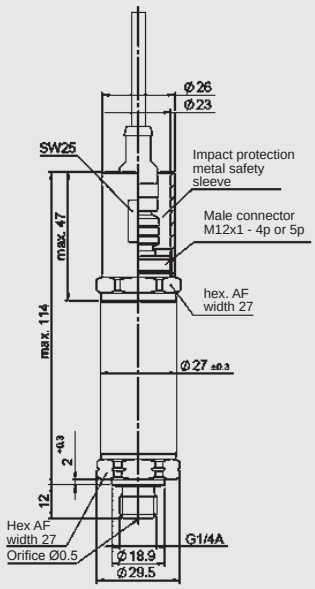

The impact protection metal safety sleeve is included. A straight mating connector is required for electrical connection. E.g. mating connector M12x1, 4 pole, straight, with 3 m shielded cable: ZBE 06S-03, part no. 6098243

Pin connections:

EN 175301-803

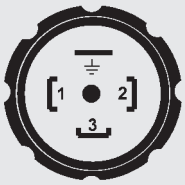

Lead	HDA 47x5-F21
1	Signal +
2	Signal -
3	n.c.
⊥	PE

M12x1

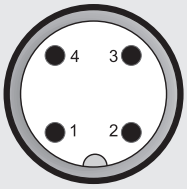

Lead	HDA 47x6-F21
1	Signal +
2	n.c.
3	Signal -
4	n.c.

Additional technical data with temperature measurement option:

Input data							
Measuring range	-25 .. +100 °C						
Probe length	7 mm						
Mechanical connection	G 1/2 A ISO 1179-2 with probe (45 Nm)						
Measuring ranges pressure in bar	16	40	60	100	250	400	600
Output data							
Output signal pressure	4 .. 20 mA with HART Protocol						
Output signal temperature	Available via HART protocol as a digital signal						
Accuracy at room temperature	≤ ± 0.4 % FS typ. ≤ ± 0.8 % FS max.						
Temperature drift (environment)	≤ ± 0.01 % FS / °C						
Reaction time to DIN EN 60751	t_{50}: ≈ 10 s t_{90}: ≈ 15 s						

Measuring range limits:

Additional measuring range limits of the secondary variable, temperature:

Lower measuring range limit		Upper measuring range limit		Measuring span	
min	max	min	max	min	max
-25 °C	75 °C	0 °C	100 °C	25 °C	125 °C

Dimensions with temperature measurement option:

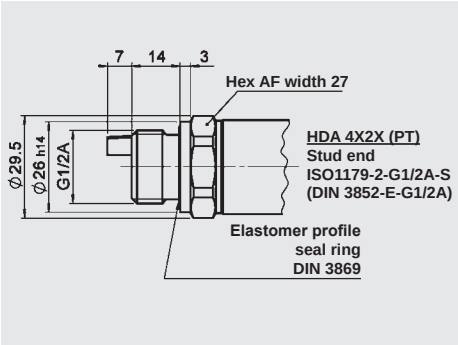

Model code with temperature measurement option:

HDA 4 7 2 X – F21 – XXXX – T – 007 – E N X – XXX

Mechanical connection
2 = G 1/2 A ISO 1179-2

Electrical connection
5 = male, EN 175301-803, 3 pole + PE (IP 67 mating connector supplied)
6 = male M12x1, 4 pole (mating connector not supplied)

Output signal
F21 = 4 .. 20 mA, 2-conductor, with HART protocol

Measuring ranges in bar
0016; 0040; 0060; 0100;0250; 0400; 0600

With temperature measurement

Probe length (in mm)
007 = 7 mm

Approval
E = **ATEX**
IECEx

Insulation voltage
N = 50 V AC to housing

Protection types and applications (code)

	ATEX				IECEx		
1 =	I M1	Ex ia	I	Ma	Ex ia	I	Ma
	II 1G	Ex ia	IIC	T6,T5 Ga	Ex ia	IIC	T6,T5 Ga
	II 1/2 G	Ex ia	IIC	T6,T5 Ga/Gb	Ex ia	IIC	T6,T5 Ga/Gb
	II 2 G	Ex ia	IIC	T6,T5 Gb	Ex ia	IIC	T6,T5 Gb
	II 1D	Ex ia	IIIC	T85 °C/T95 °C Da	Ex ia	IIIC	T85 °C/T95 °C Da
9 =	II 3G	Ex nA	IIC	T6, T5 Gc	Ex nA	IIC	T6, T5 Gc
	Only in conjunction with electr. connection "6" and the impact protection metal safety sleeve (see dimensions)						
A =	II 1D	Ex ta	IIIC	T80/T90 °C T_{500}90/ T_{500}100 °C Da	Ex ta	IIIC	T80/T90 °C T_{500}T90/ T_{500}100 °C Da
	II 2D	Ex tb	IIIC	T80/T90 °C Db	Ex tb	IIIC	T80/T90 °C Db
	Only in conjunction with electr. connection "6" and the impact protection metal safety sleeve (see dimensions)						
C =	II 3G	Ex ic	IIC	T6, T5 Gc	Ex ic	IIC	T6, T5 Gc
	II 3D	Ex ic	IIIC	T80/T90 °C Dc	Ex ic	IIIC	T80/T90 °C Dc

Modification number
000 = standard

Note:

The information in this brochure relates to the operating conditions and applications described.

For applications or operating conditions not described, please contact the relevant technical department.

Subject to technical modifications.

HYDAC ELECTRONIC GMBH
Hauptstraße 27, 66128 Saarbrücken
Germany
Telephone +49 (0)6897 509-01
Fax +49 (0)6897 509-1726
E-mail: electronic@hydac.com
Internet: www.hydac.com

Pressure Transmitter HDA 4300 Ex applications

Relative pressure | **Accuracy 0.5 %**

Intrinsically Safe, Dustproof enclosure
Non-Sparking
ATEX, IECEx, double approval
HART interface

Description:

The pressure transmitter HDA 4300 with HART interface is a compact pressure transmitter (intrinsically safe version) which is used to measure relative pressures in hydraulics and pneumatics. The double approval in accordance with ATEX and IECEx enables universal, almost worldwide utilisation of the devices in potentially explosive atmospheres.

As with the industry model, the ATEX/IECEx version HDA 4300 has a ceramic measurement cell with thick-layer strain gauge.

In addition to the analogue 4 .. 20 mA output of the measured value, digital communication is possible by means of the HART protocol.

Intended fields of application are, for example, in the oil and gas industry, in mining, on gas turbines or in locations with high dust contamination, e.g. in mills.

Protection types and applications:

ATEX

I M1	Ex ia	I	Ma
II 1G	Ex ia	IIC	T6,T5 Ga
II 1/2 G	Ex ia	IIC	T6,T5 Ga/Gb
II 2 G	Ex ia	IIC	T6,T5 Gb
II 1D	Ex ia	IIIC	T85 °C/T95 °C Da
II 1D	Ex ta	IIIC	T80/90/100 °C T_{500}90/ T_{500}100/ T_{500}110 °C Da
II 2D	Ex tb	IIIC	T80/T90/T100 °C Db
II 3G	Ex nA	IIC	T6, T5, T4 Gc
II 3G	Ex ic	IIC	T6, T5, T4 Gc
II 3D	Ex tc	IIIC	T80/T90/T100 °C Dc
II 3D	Ex ic	IIIC	T80/T90/T100 °C Dc

IECEx

Ex ia	I	Ma
Ex ia	IIC	T6,T5 Ga
Ex ia	IIC	T6,T5 Ga/Gb
Ex ia	IIC	T6,T5 Gb
Ex ia	IIIC	T85/T95 °C Da
Ex ta	IIIC	T80/T90/T100 °C T_{500}90/T_{500}100/T_{500}110 °C Da
Ex tb	IIIC	T80/T90/T100 °C Db
Ex nA	IIC	T6,T5,T4 Gc
Ex ic	IIC	T6,T5,T4 Gc
Ex tc	IIIC	T80/T90/T100 °C Dc
Ex ic	IIIC	T80/T90/T100 °C Dc

Technical data:

Input data										
Measuring ranges	bar	1	2.5	4	6	10	16	25	40	-1 .. 1
Overload pressures	bar	3	8	12	20	32	50	80	120	3
Burst pressure	bar	5	12	18	30	48	75	120	180	5

Mechanical connection	G1/4 A ISO 1179-2
Tightening torque, recommended	20 Nm
Parts in contact with fluid	Sensor: Ceramic Mech. connection: 1.4301 Seal: FKM / EPDM
Output data	
Output signal, permitted load resistance	4 .. 20 mA, 2-conductor, with HART protocol $R_{Lmax} = (U_B - 12\ V) / 20\ mA\ [k\Omega]$ for HART communication min. 250 Ω
HART Communication	Acc. to HART 7 specifications
HART Common Practice Commands, e.g.	Altering of measuring range limits (see table)
	Zero point adjustment within max. 3 % of the span
Accuracy acc. to DIN 16086, terminal based	≤ ± 0.5 % FS typ. ≤ ± 1 % FS max.
Accuracy, B.F.S.L.	≤ ± 0.25 % FS typ. ≤ ± 0.5 % FS max.
Temperature compensation Zero point	≤ ± 0.02 % FS / °C typ. ≤ ± 0.03 % FS / °C max.
Temperature compensation Span	≤ ± 0.02 % FS / °C typ. ≤ ± 0.03 % FS / °C max.
Non-linearity acc. to DIN 16086, terminal based	≤ ± 0.5 % FS max.
Hysteresis	≤ ± 0.4 % FS max.
Repeatability	≤ ± 0.1 % FS
Rise time	≤ 25 ms
Long-term drift	≤ ± 0.3 % FS typ. / year
Environmental conditions	
Compensated temperature range	-25 .. +85 °C
Operating/ambient temperature range [1) 2)]	T6, T80/T85 °C, T_{500} 90 °C — Ta = -20 .. +60 °C T5, T90/T95 °C, T_{500} 100 °C — Ta = -20 .. +70 °C T100 °C, T_{500} 110 °C — Ta = -20 .. +80 °C T4 — Ta = -20 .. +85 °C
Storage temperature range	-40 .. +100 °C
Fluid temperature range [1)2)]	T6, T80/T85 °C, T_{500} 90 °C — Ta = -20 .. +60 °C T5, T90/T95 °C, T_{500} 100 °C — Ta = -20 .. +70 °C T100 °C, T_{500} 110 °C — Ta = -20 .. +80 °C T4 — Ta = -20 .. +85 °C
CE mark	EN 61000-6-1 / 2 / 3 / 4 EN 60079-0 / 11 / 15 / 26 / 31 EN 50303
Vibration resistance acc. to DIN EN 60068-2-6 at 10 .. 500 Hz	≤ 20 g
Protection class acc. to DIN EN 60529[3)]	IP 67

Relevant data for Ex applications	**Ex ia, ic**	**Ex nA, ta, tb, tc**
Supply voltage	12 .. 28 V DC	12 .. 28 V DC
Max. input current	Ii = 100 mA	
Max. input power	Pi = 0.7 W	Max. power consumption ≤ 1 W
Connection capacitance of the sensor	Ci ≤ 22 nF	
Inductance of the sensor	Li = 0 mH	
Insulation voltage[4)]	50 V AC, with integrated overvoltage protection acc. to EN 61000-6-2	

Other data	
Residual ripple of supply voltage	acc. to FSK Physical Layer Specification (HCF_SPEC-054)
Current consumption	≤ 25 mA
Life expectancy	> 10 million cycles (0 .. 100 % FS)
Weight	~ 150 g

Note: Reverse polarity protection of the supply voltage, excess voltage, override and short circuit protection are provided.
FS (**F**ull **S**cale) = relative to complete measuring range
B.F.S.L. = **B**est **F**it **S**traight **L**ine

[1)] -20 °C with FKM seal or EPDM seal, -40 °C on request
[2)] With M12x1 male connector, only up to -25 °C
[3)] With mounted mating connector in corresponding protection class
[4)] 500 V AC on request

Measuring range limits:

By means of HART Common Practice Commands, you have the opportunity to adjust the following measuring range limits:

Lower measuring range limit		Upper measuring range limit		Measuring span	
min	max	min	max	min	max
0 % FS	112.5 % FS	37.5 % FS	150 % FS	37.5 % FS	150 % FS

Fields of application:

Code no. for use in model code	1			9	A	C
ATEX DEKRA 13ATEX0031X DEKRA 13ATEX0032	I M1 Ex ia I Ma	II 1G Ex ia IIC T6,T5 Ga II 1/2G Ex ia IIC T6,T5 Ga/Gb II 1D Ex ia IIIC T85/T95 °C Da	II 2G Ex ia IIC T6,T5 Gb	II 3G Ex nA IIC T6,T5 Gc	II 1D Ex ta IIIC T80/T90 °C T_{500}T90/T_{500}T100 °C Da II 2D Ex tb IIIC T80/T90 °C Db	II 3G Ex ic IIC T6,T5 Gc II 3D Ex ic IIIC T80/T90 °C Dc
IECEx DEK 14.0011X	Ex ia I Ma	Ex ia IIC T6,T5 Ga Ex ia IIC T6,T5 Ga/Gb Ex ia IIIC T85/T95 °C Da	Ex ia IIC T6,T5 Gb	Ex nA IIC T6,T5 Gc	Ex ta IIIC T80/T90 °C T_{500}90/T_{500}100 °C Da Ex tb IIIC T80/T90 °C Db	Ex ic IIC T6,T5 Gc Ex ic IIIC T80/T90 °C Dc
Application fields	Mining Protection type: intrinsically safe ia with barrier	Gases/conductive dust Protection type: intrinsically safe ia with barrier	Gases Protection type: intrinsically safe ia with barrier	Gases Protection type: non-sparking nA	Conductive dust Protection type: dustproof enclosure	Gases/conductive dust Protection type: intrinsically safe ic with barrier
Electrical connection (see model code)	5, 6	5, 6	5, 6	6	6	5, 6

Instruments for other protection types and zones (see cover) are available upon request.

Model code:

HDA 4 3 4 X – F21 – XXXX – E N X – 000 – X 1

Mechanical connection
4 = G1/4 A ISO 1179-2

Electrical connection
5 = male, EN175301-803, 3 pole + PE
(IP 67 mating connector supplied)
6 = male M12x1, 4 pole
(mating connector not supplied)

Output signal
F21 = 4 .. 20 mA, 2-conductor, with HART protocol

Measuring ranges in bar
01.0; 02.5; 04.0; 06.0; 0010; 0016; 0025; 0040; 0001 (-1 .. 1)

Approval
E = ATEX
IECEx

Insulation voltage
N = 50 V AC to housing

Protection types and applications (code)

	ATEX		IECEx	
1 =	I M1	Ex ia I Ma	Ex ia I Ma	
	II 1G	Ex ia IIC T6,T5 Ga	Ex ia IIC T6,T5 Ga	
	II 1/2 G	Ex ia IIC T6,T5 Ga/Gb	Ex ia IIC T6,T5 Ga/Gb	
	II 2 G	Ex ia IIC T6,T5 Gb	Ex ia IIC T6,T5 Gb	
	II 1D	Ex ia IIIC T85 °C/T95 °C Da	Ex ia IIIC T85 °C/T95 °C Da	
9 =	II 3G	Ex nA IIC T6,T5 Gc	Ex nA IIC T6,T5 Gc	
	Only in conjunction with electrical connection "6" and the impact protection metal safety sleeve (see dimensions)			
A =	II 1D	Ex ta IIIC T80 °C/90 °C T_{500}90/T_{500}100 °C Da	Ex ta IIIC T 80 °C/90 °C T_{500}90/T_{500}100 °C Da	
	II 2D	Ex tb IIIC T80 °C/90 °C Db	Ex tb IIIC T80 °C/90 °C Db	
	Only in conjunction with electrical connection "6" and the impact protection metal safety sleeve (see dimensions)			
C =	II 3G	Ex ic IIC T6,T5 Gc	Ex ic IIC T6,T5 Gc	
	II 3D	Ex ic IIIC T80 °C/90 °C Dc	Ex ic IIIC T80 °C/90 °C Dc	

Modification number
000 = standard

Sealing material (in contact with fluid)
F = FKM seal (e.g. for hydraulic oils)
E = EPDM seal (e.g. for refrigerants)

Connection material (in contact with fluid)
1 = stainless steel

Dimensions:

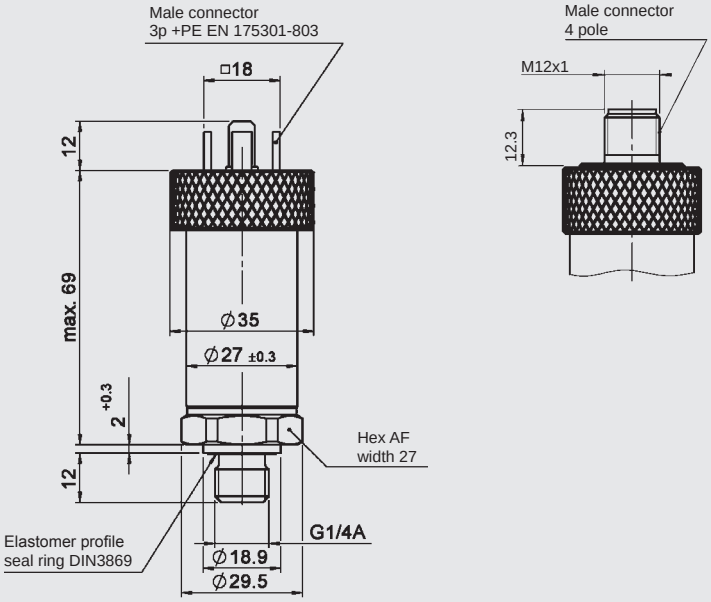

With impact protection metal safety sleeve:

Protection types and applications (code): 9, A

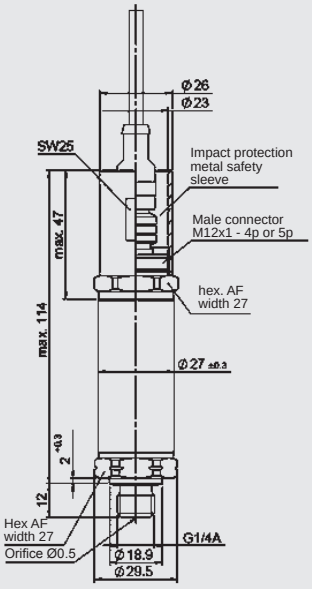

The impact protection metal safety sleeve is included. A straight mating connector is required for electrical connection. E.g. mating connector M12x1, 4 pole, straight, with 3 m shielded cable: ZBE 06S-03, part no. 6098243

Pin connections:

EN175301-803

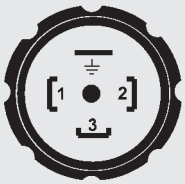

Pin	HDA 4345-F21
1	Signal +
2	Signal -
3	n.c.
⊥	PE

M12x1

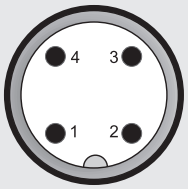

Pin	HDA 4346-F21
1	Signal +
2	n.c.
3	Signal -
4	n.c.

Note:

The information in this brochure relates to the operating conditions and applications described.

For applications or operating conditions not described, please contact the relevant technical department.

Subject to technical modifications.

HYDAC ELECTRONIC GMBH
Hauptstr. 27, 66128 Saarbrücken
Germany
Phone +49 (0)6897 509-01
Fax +49 (0)6897 509-1726
e-mail: electronic@hydac.com
Internet: www.hydac.com

Pressure Transmitter HDA 4400 Ex applications

Relative pressure | **Accuracy 0.5 %**

Intrinsically Safe, Dustproof enclosure
Non-Sparking
ATEX, IECEx, double approval
Flush membrane
HART interface

Description:

The pressure transmitter HDA 4400 in intrinsically safe version has been specially developed for use in potentially explosive atmospheres and is based on the HDA 4000 series. The double approval in accordance with ATEX and IECEx enables universal, almost worldwide utilisation of the devices.

The pressure port is achieved with a fully-sealed stainless steel front membrane filled internally with a pressure transfer fluid. The process pressure is transmitted hydrostatically to the measurement cell via the pressure transfer fluid. In addition to the analogue 4 .. 20 mA output of the measured value, digital communication is possible by means of the HART protocol.

This device is used for applications in which a standard pressure port could become blocked, clogged or frozen by the particular medium used or in processes where the medium changes regularly and any residues could cause mixing or contamination of the media.

Intended fields of application are, for example, in the oil and gas industry, in mining or in locations with high dust contamination, e.g. in mills.

Protection types and applications:

ATEX

I M1	Ex ia	I	Ma
II 1G	Ex ia	IIC	T6,T5 Ga
II 1/2G	Ex ia	IIC	T6,T5 Ga/Gb
II 2 G	Ex ia	IIC	T6,T5 Gb
II 1D	Ex ia	IIIC	T85/T95 °C Da
II 1D	Ex ta	IIIC	T80/90/100 °C T_{500}90/ T_{500}100/ T_{500}110 °C Da
II 2D	Ex tb	IIIC	T80/T90/T100 °C Db
II 3G	Ex nA	IIC	T6, T5, T4 Gc
II 3G	Ex ic	IIC	T6, T5, T4 Gc
II 3D	Ex tc	IIIC	T80/T90/T100 °C Dc
II 3D	Ex ic	IIIC	T80/T90/T100 °C Dc

IECEx

Ex ia	I	Ma
Ex ia	IIC	T6,T5 Ga
Ex ia	IIC	T6,T5 Ga/Gb
Ex ia	IIC	T6,T5 Gb
Ex ia	IIIC	T85/T95 °C Da
Ex ta	IIIC	T80/T90/T100 °C T_{500}90/ T_{500}100/T_{500}110 °C Da
Ex tb	IIIC	T80/T90/T100 °C Db
Ex nA	IIC	T6,T5,T4 Gc
Ex ic	IIC	T6,T5,T4 Gc
Ex tc	IIIC	T80/T90/T100 °C Dc
Ex ic	IIIC	T80/T90/T100 °C Dc

Technical data:

Input data													
Measuring ranges	bar	4	6	10	16	25	40	100	250	400	600	-1..3
Overload pressures	bar	8	12	20	32	50	80	200	500	800	1000	8
Burst pressure	bar	20	30	50	80	125	200	500	1000	2000	2000	20

Mechanical connection	G1/2 A ISO 1179-2 G1/2 with additional front O-ring seal G1/4 with additional front O-ring seal	
Tightening torque, recommended	20 Nm (G 1/4); 45 Nm (G 1/2)	
Parts in contact with fluid	Stainless steel:1.4435; 1.4301 Seal: FKM, O-ring: FKM	
Pressure transfer fluid	Silicone-free oil	
Output data		
Output signal, permitted load resistance	4 .. 20 mA, 2-conductor, with HART protocol $R_{Lmax.} = (U_B - 12\ V) / 20\ mA\ [k\Omega]$ for HART communication min. 250 Ω	
	HART communication acc. to HART 7 specifications	
	HART Common Practice Commands e.g. Altering of measuring range limits (see table), Zero point adjustment within max. 3 % of the span	
Accuracy acc. to DIN 16086, terminal based	≤ ± 0.5 % FS typ. ≤ ± 1.0 % FS max.	
Accuracy, B.F.S.L.	≤ ± 0.25 % FS typ. ≤ ± 0.5 % FS max.	
Temperature compensation Zero point	≤ ± 0.015 % FS / °C typ. ≤ ± 0.025 % FS / °C max.	
Temperature compensation Span	≤ ± 0.015 % FS / °C typ. ≤ ± 0.025 % FS / °C max.	
Non-linearity acc. to DIN 16086, terminal based	≤ ± 0.3 % FS max.	
Hysteresis	≤ ± 0.4 % FS max.	
Repeatability	≤ ± 0.1 % FS	
Rise time	≤ 25 ms	
Long-term drift	≤ ± 0.3 % FS typ. / year	
Environmental conditions		
Compensated temperature range	-25 .. +85 °C	
Operating/ambient/ fluid temperature range [1) 2)]	T6, T80/T85 °C, T_{500}90 °C T5, T90/T95 °C,T_{500}100 °C T100 °C, T_{500}110 °C T4	Ta = -30 .. +60 °C/-20 .. +60 °C Ta = -30 .. +70 °C/-20 .. +70 °C Ta = -30 .. +80 °C/-20 .. +80 °C Ta = -30 .. +85 °C/-20 .. +85 °C
Storage temperature range	-40 .. +100 °C	
CE mark	EN 61000-6-1/2/3/4; EN 60079-0/11/15/26/31; EN 50303	
Vibration resistance acc. to DIN EN 60068-2-6 at 10 .. 500 Hz	≤ 20 g	
Protection class acc. to DIN EN 60529 [3)]	IP 67	
Relevant data for Ex applications	**Ex ia, ic**	**Ex nA, ta, tb, tc**
Supply voltage	12 .. 28 V DC	12 .. 28 V DC
Max. input current	Ii = 100 mA	
Max. input power	Pi = 0.7 W	Max. power consumption ≤1W
Connection capacitance of the sensor	Ci ≤ 22 nF	
Inductance of the sensor	Li = 0 mH	
Insulation voltage [4)]	50 V AC, with integrated overvoltage protection acc. to EN 61000-6-2	
Other data		
Residual ripple of supply voltage	acc. to FSK Physical Layer Specification (HCF_SPEC-054)	
Current consumption	≤ 25 mA	
Life expectancy	> 10 million cycles (0 .. 100 % FS)	
Weight	180 g	

Note: Reverse polarity protection of the supply voltage, excess voltage, override and short circuit protection are provided.
FS (**F**ull **S**cale) = relative to complete measuring range
B.F.S.L. = **B**est **F**it **S**traight **L**ine
1) -20 °C with FKM seal, -30 °C on request
2) With M12x1 male connector, only up to -25 °C
3) With mounted mating connector in corresponding protection class
4) 500 V AC on request

Measuring range limits:

By means of HART Common Practice Commands, you have the opportunity to adjust the following measuring ranges:

Lower measuring range limit		Upper measuring range limit		Measuring span	
min	max	min	max	min	max
0 % FS	112.5 % FS	37.5 % FS	150 % FS	37.5 % FS	150 % FS

Fields of application:

Code no. for use in model code	1			9	A	C
ATEX **DEKRA 13ATEX0031X** **DEKRA 13ATEX0032**	I M1 Ex ia I Ma	II 1G Ex ia IIC T6,T5 Ga II 1/2G Ex ia IIC T6,T5 Ga/Gb II 1D Ex ia IIIC T85/T95 °C Da	II 2G Ex ia IIC T6,T5 Gb	II 3G Ex nA IIC T6,T5 Gc	II 1D Ex ta IIIC T80/T90 °C T_{500}T90/T_{500}T100 °C Da II 2D Ex tb IIIC T80/T90 °C Db	II 3G Ex ic IIC T6, T5 Gc II 3D Ex ic IIIC T80/T90 °C Dc
IECEx **DEK 14.0011X**	Ex ia I Ma	Ex ia IIC T6 Ga Ex ia IIC T6 Ga/Gb Ex ia IIIC T85 °C Da	Ex ia IIC T6,T5 Gb	Ex nA IIC T6,T5 Gc	Ex ta IIIC T80/T90 °C T_{500}T90/T_{500}T100 °C Da Ex tb IIIC T80/T90 °C Db	Ex ic IIC T6,T5 Gc Ex ic IIIC T80/T90 °C Dc
Application fields	Mining Protection type: intrinsically safe ia with barrier	Gases/conductive dust Protection type: intrinsically safe ia with barrier	Gases Protection type: intrinsically safe ia with barrier	Gases Protection type: non-sparking nA	Conductive dust Protection type: dustproof enclosure	Gases/conductive dust Protection type: intrinsically safe ic with barrier
Electrical connection (see model code)	5, 6	5, 6	5, 6	6	6	5, 6

Instruments for other protection types and zones (see cover) are available upon request.

Model code:

HDA 4 4 Z X – F21 – XXXX – GXX – E N X – 000

Mechanical process connection

Z = flush membrane

Electrical connection

5 = male, EN 175301-803, 3 pole +PE (IP 67 mating connector supplied)
6 = male M12x1, 4 pole (mating connector not supplied)

Output signal

F21 = 4 .. 20 mA, 2-conductor, with HART protocol

Measuring ranges in bar

04.0; 06.0; 0010; 0016; 0025; 0040; 0060; 0100; 0250; 0400; 0600
0003 (-1 .. 3)

Mechanical connection

G01 = G1/2 A ISO 1179-2
G02 = G1/2 with additional front O-ring seal
G04 = G1/4 with additional front O-ring seal (only measuring ranges 0040; 0100; 0250; 0400 and 0600)

Approval

E = ATEX
IECEx

Insulation voltage

N = 50 V AC to housing

Protection types and applications (code)

	ATEX	IECEx
1 =	I M1 Ex ia I Ma II 1G Ex ia IIC T6,T5 Ga II 1/2 G Ex ia IIC T6,T5 Ga/Gb II 2 G Ex ia IIC T6,T5 Gb II 1D Ex ia IIIC T85/T95 °C Da	Ex ia I Ma Ex ia IIC T6,T5 Ga Ex ia IIC T6,T5 Ga/Gb Ex ia IIC T6,T5 Gb Ex ia IIIC T85/T95 °C Da
9 =	II 3G Ex nA IIC T6, T5 Gc Only in conjunction with electr. connection "6" and the impact protection metal safety sleeve (see dimensions)	Ex nA IIC T6, T5 Gc
A =	II 1D Ex ta IIIC T80/T90 °C T_{500}90/ T_{500}100°C Da II 2D Ex tb IIIC T80/T90 °C Db Only in conjunction with electr. connection "6" and the impact protection metal safety sleeve (see dimensions)	Ex ta IIIC T80/T90 °C T_{500}90/ T_{500}100 °C Da Ex tb IIIC T80/T90 °C Db
C =	II 3G Ex ic IIC T6, T5 Gc II 3D Ex ic IIIC T80/T90 °C Dc	Ex ic IIC T6, T5 Gc Ex ic IIIC T80/T90 °C Dc

Modification number

000 = standard

Dimensions:

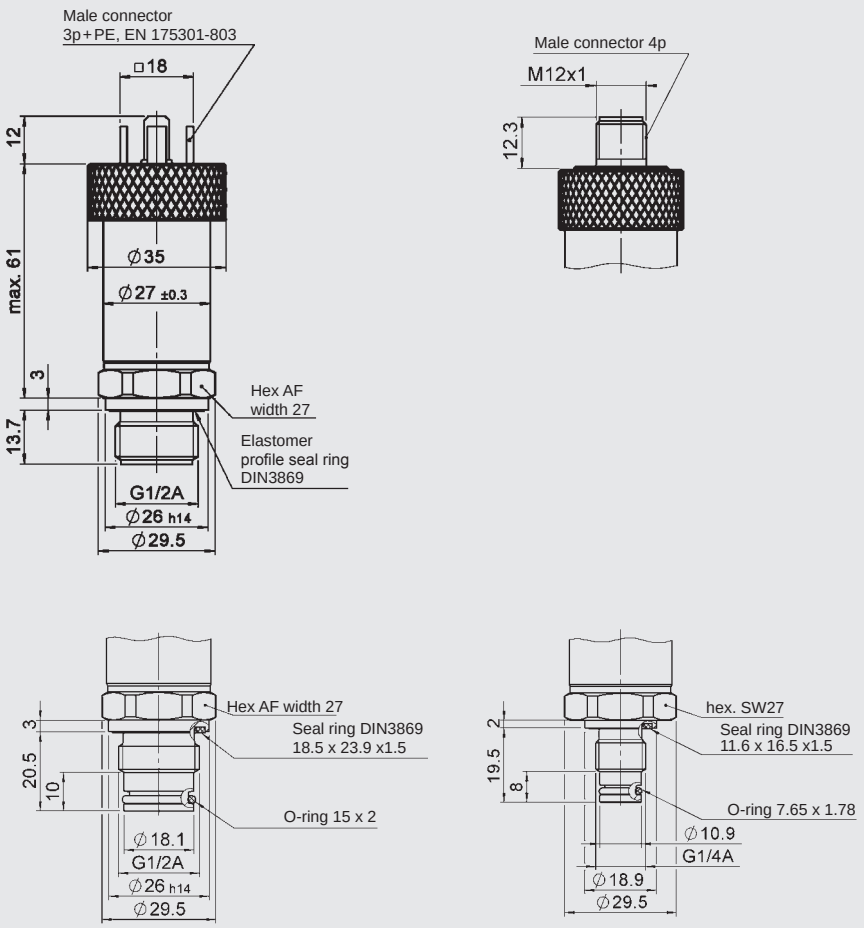

With impact protection metal safety sleeve:

Protection types and applications (code): 9, A

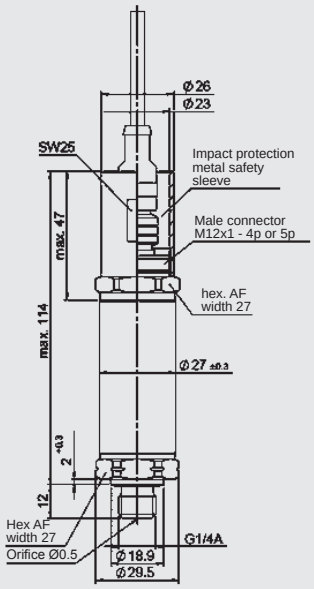

The impact protection metal safety sleeve is included. A straight mating connector is required for electrical connection. E.g. mating connector M12x1, 4 pole, straight, with 3 m shielded cable: ZBE 06S-03, part no. 6098243

Pin connections:

EN 175301-803

Pin	HDA 4425-F21
1	Signal +
2	Signal -
3	n. c.
⊥	PE

M12x1

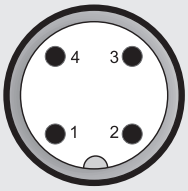

Pin	HDA 4426-F21
1	Signal +
2	n. c.
3	Signal -
4	n. c.

Note:

The information in this brochure relates to the operating conditions and applications described.

For applications or operating conditions not described, please contact the relevant technical department.

Subject to technical modifications.

HYDAC ELECTRONIC GMBH
Hauptstr. 27, 66128 Saarbrücken
Germany
Phone +49 (0)6897 509-01
Fax +49 (0)6897 509-1726
e-mail: electronic@hydac.com
Internet: www.hydac.com

Pressure Transmitter HDA 4100 Ex applications

Absolute pressure | **Accuracy 0.5 %**

Intrinsically Safe
Non-Incendive
CSA approval

Description:

The pressure transmitter HDA 4100 in CSA version has been specially developed for the North American market for use in potentially explosive atmospheres and is based on the HDA 4000 series.

As with the industry model, the HDA 4100 in CSA version has a ceramic measurement cell with thick-layer strain gauge for measuring absolute pressure in the low pressure range.

Intended fields of application are, for example, the oil and gas industry, on gas turbines or in locations with high levels of dust contamination, e.g. in mills.

Protection types and applications:
Intrinsically safe:

- Class I Div. 1 Group A, B, C, D T6 [C, US]
- Class I Zone 0 AEx ia IIC T6 [US]
- Ex ia IIC T6 [C]

- Class I, II, III Div. 1 Group A, B, C, D, E, F, G T6 [C, US]

Non-incendive:

- Class I Div. 2 Group A, B, C, D T4A [C, US]
- Class I Zone 2 AEx nL IIC T4 [US]
- Class I Zone 2 Ex nL IIC T4 [C]

- Class I, II, III Div. 2 Group A, B, C, D, F, G T4A [C, US]
- Class I Zone 2 AEx nA II T4 [US]
- Class I Zone 2 Ex nA II T4 [C]

Technical data:

Input data			
Measuring ranges[1]	bar	1	2.5
Overload pressures	bar	3	8
Burst pressure	bar	5	12
Mechanical connection	G1/4 A ISO 1179-2		
Tightening torque, recommended	20 Nm		
Parts in contact with fluid	Sensor: Ceramic Al203 Mech. connector: 1.4301 Seal: FKM/EPDM		
Output data			
Output signal, permitted load resistance	4 .. 20 mA, 2-conductor $R_{Lmax} = (U_B - 12\ V) / 20\ mA\ [k\Omega]$		
Accuracy acc. to DIN 16086, terminal based	≤ ± 0.5 % FS typ. ≤ ± 1.0 % FS max.		
Accuracy, B.F.S.L.	≤ ± 0.25 % FS typ. ≤ ± 0.5 % FS max.		
Temperature compensation Zero point	≤ ± 0.02 % FS / °C typ. ≤ ± 0.03 % FS / °C max.		
Temperature compensation Span	≤ ± 0.02 % FS / °C typ. ≤ ± 0.03 % FS / °C max.		
Non-linearity acc. to DIN 16086, terminal based	≤ ± 0.5 % FS max.		
Hysteresis	≤ ± 0.4 % FS max.		
Repeatability	≤ ± 0.1 % FS		
Rise time	≤ 1.5 ms		
Long-term drift	≤ ± 0.3 % FS typ. / year		
Environmental conditions			
Compensated temperature range	-25 .. +85 °C		
Operating/ambient temperature range	Intrinsically safe: Ta = -20 .. +60 °C Non-incendive: Ta = -20 .. +85 °C		
Storage temperature range	-40 .. +100 °C		
Fluid temperature range[2]	Intrinsically safe: Ta = -40 .. +60 °C / -20 .. +60 °C Non-incendive: Ta = -40 .. +85 °C / -20 .. +85 °C		
Vibration resistance acc. to DIN EN 60068-2-6 at 10 .. 500 Hz	≤ 10 g (1/2-14NPT Conduit) ≤ 20 g (male connector)		
Protection class acc. to DIN EN 60529 / NEMA[3] ISO 20653	IP 65; NEMA4 (male connector) IP6K9K (1/2-14NPT Conduit)		
Relevant data for Ex applications			
Supply voltage	12 .. 28 V DC		
Max. input current	Ii = 100 mA		
Max. input power	up to 28 V: Pi = 1 W		
Connection capacitance of the sensor	Ci ≤ 22 nF		
Inductance of the sensor	Li = 0 mH		
Insulation voltage[4]	50 V AC, with integrated overvoltage protection acc. to EN 61000-6-2		
Other data			
Residual ripple of supply voltage	≤ 5 %		
Current consumption	≤ 25 mA		
Life expectancy	> 10 million cycles, 0 .. 100 % FS		
Weight	~ 180 g; ~ 300 g (1/2-14NPT Conduit)		

Note: Reverse polarity protection of the supply voltage, excess voltage, override and short circuit protection are provided.
FS (**F**ull **S**cale) = relative to complete measuring range, **B.F.S.L.** = **B**est **F**it **S**traight **L**ine

[1] psi measuring ranges on request
[2] -20 °C with FKM or EPDM seal, -40 °C on request
[3] With mounted mating connector in corresponding protection class
[4] 500 V AC on request

Fields of application:

Group	1	2	3	4
Protection type	Intrinsically safe Gases and dusts	Intrinsically safe Gases	Non-incendive (with field wiring) Gases	Non-incendive Gases and dusts
Certificate	CSA 1760344			
Application fields	Intrinsically safe - Class I, II, III Division 1 Group A, B, C, D, E, F, G T6	Intrinsically safe - Class I Division 1 Group A, B, C, D T6 - Class I Zone 0 AEx ia IIC T6 - Ex ia IIC T6	Non-incendive - Class I Division 2 Group A, B, C, D T4A - Class I Zone 2 AEx nL IIC T4 - Class I Zone 2 Ex nL IIC T4	Non-incendive - Class I, II, III Division 2 Group A, B, C, D, F, G T4A - Class I Zone 2 Ex nA II T4 - Class I Zone 2 AEx nA II T4 IP 6x
Electrical connection	9	5, 9, A	5, 9, A	9
Code for model code	A	B		C

Model code:

HDA 4 1 4 X – A – XXXX – C N X – 000 – X 1 (2m)

Mechanical connection
4 = G1/4 A ISO 1179-2

Electrical connection
5 = male EN175301-803
3 pole + PE
(IP67 mating connector supplied)
9 = 1/2-14 NPT Conduit (male thread),
single leads
A = male EN175301-803
3 pole + PE
(1/2" Conduit female thread)

Output signal
A = 4 .. 20 mA, 2-conductor

Measuring ranges in bar
01.0; 02.5

Approval
C = CSA

Insulation voltage
N = 50 V AC to housing

Protection types and applications (code)
A = Group 1
B = Group 2 and 3
C = Group 4

Modification number
000 = standard

Sealing material (in contact with fluid)
F = FKM seal (e.g. for hydraulic oils)
E = EPDM seal (e.g. for refrigerants)

Connection material (in contact with fluid)
1 = stainless steel

Cable length in m (only for electr. connection code 9)
Standard = 2 m

Dimensions:

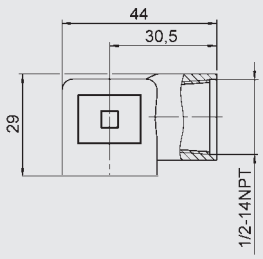

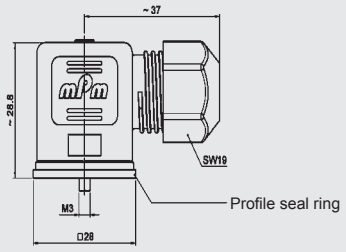

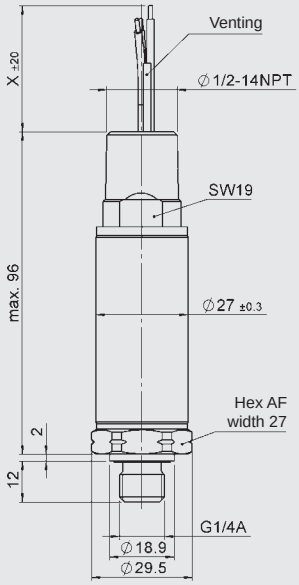

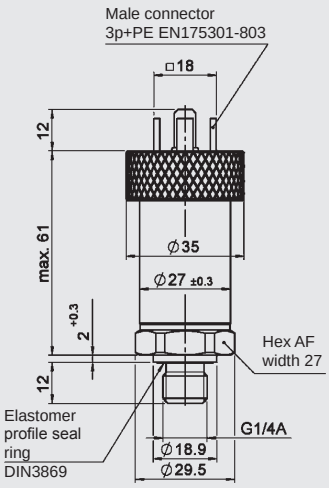

Pin connections:

Conduit (single leads)

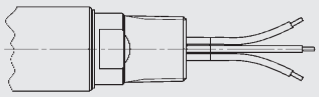

Lead	HDA 41X9-A
green	Signal +
white	Signal -
green-yellow	Housing

EN175301-803

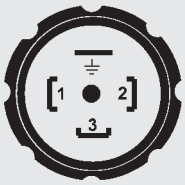

Pin	HDA 41X5-A	HDA 41XA-A
1	Signal +	Signal +
2	Signal -	Signal -
3	n.c.	n.c.
⊥	Housing	Housing

Note:

The information in this brochure relates to the operating conditions and applications described.

For applications or operating conditions not described, please contact the relevant technical department.

Subject to technical modifications.

HYDAC ELECTRONIC GMBH
Hauptstraße 27, 66128 Saarbrücken
Germany
Telephone +49 (0)6897 509-01
Fax +49 (0)6897 509-1726
E-mail: electronic@hydac.com
Internet: www.hydac.com

Pressure Transmitter HDA 4100 Ex applications

Absolute pressure | **Accuracy 0.5 %**

Intrinsically Safe, Dustproof enclosure
Non-Sparking
ATEX, IECEx, double approval

Description:

The pressure transmitter HDA 4100 is a compact pressure transmitter (intrinsically safe version) which is used to measure absolute pressures in hydraulics and pneumatics. The double approval in accordance with ATEX and IECEx enables universal, almost worldwide utilisation of the devices in potentially explosive atmospheres.

As with the industry model, the ATEX/IECEx version HDA 4100 has a ceramic measurement cell with thick-layer strain gauge.

Intended fields of application are, for example, in the oil and gas industry, in mining, on gas turbines or in locations with high dust contamination, e.g. in mills.

Protection types and applications:

ATEX

I M1	Ex ia	I	Ma
II 1G	Ex ia	IIC	T6 Ga
II 1/2G	Ex ia	IIC	T6 Ga/Gb
II 2G	Ex ia	IIC	T6 Gb
II 3G	Ex nA	IIC	T6, T5, T4 Gc
II 3G	Ex ic	IIC	T6, T5, T4 Gc
II 1D	Ex ia	IIIC	T85 °C Da
II 1D	Ex ta	IIIC	T80/90/100 °C T_{500}90/T_{500}100/T_{500}110 °C Da
II 2D	Ex tb	IIIC	T80/T90/T100 °C Db
II 3D	Ex tc	IIIC	T80/T90/T100 °C Dc
II 3D	Ex ic	IIIC	T80/T90/T100 °C Dc

IECEx

Ex ia	I	Ma
Ex ia	IIC	T6 Ga
Ex ia	IIC	T6 Ga/Gb
Ex ia	IIC	T6 Gb
Ex nA	IIC	T6,T5,T4 Gc
Ex ic	IIC	T6,T5,T4 Gc
Ex ia	IIIC	T85 °C Da
Ex ta	IIIC	T80/T90/T100 °C Da T_{500}90/T_{500}100/T_{500}110 °C Da
Ex tb	IIIC	T80/T90/T100 °C Db
Ex tc	IIIC	T80/T90/T100 °C Dc
Ex ic	IIIC	T80/T90/T100 °C Dc

Technical data:

Input data			
Measuring ranges	bar	1	2.5
Overload pressures	bar	3	8
Burst pressure	bar	5	12
Mechanical connection		G1/4 A ISO 1179-2	
Tightening torque, recommended		20 Nm	
Parts in contact with fluid		Sensor: Ceramic Mech. connection: 1.4301 Seal: FKM/EPDM	
Output data			
Output signal, permitted load resistance		4 .. 20 mA, 2-conductor R_{Lmax} = (U_B - 12 V) / 20 mA [kΩ]	
Accuracy acc. to DIN 16086, terminal based		≤ ± 0.5 % FS typ. ≤ ± 1 % FS max.	
Accuracy, B.F.S.L.		≤ ± 0.25 % FS typ. ≤ ± 0.5 % FS max.	
Temperature compensation Zero point		≤ ± 0.02 % FS / °C typ. ≤ ± 0.03 % FS / °C max.	
Temperature compensation Span		≤ ± 0.02 % FS / °C typ. ≤ ± 0.03 % FS / °C max.	
Non-linearity acc. to DIN 16086, terminal based		≤ ± 0.5 % FS max.	
Hysteresis		≤ ± 0.4 % FS max.	
Repeatability		≤ ± 0.1 % FS	
Rise time		≤ 1.5 ms	
Long-term drift		≤ ± 0.3 % FS typ. / year	
Environmental conditions			
Compensated temperature range		-25 .. +85 °C	
Operating/ambient temperature range		T6, T80/T85 °C, T_{500}90 °C T5, T90 °C,T_{500}100 °C T100 °C, T_{500}110 °C T4	Ta = -20 .. +60 °C Ta = -20 .. +70 °C Ta = -20 .. +80 °C Ta = -20 .. +85 °C
Storage temperature range		-40 .. +100 °C	
Fluid temperature range [1)2)]		-40 .. +60 °C / -20 .. +60 °C	
CE mark		EN 61000-6-1 / 2 / 3 / 4 EN 60079-0 / 11 / 15 / 26 / 31 EN 50303	
Vibration resistance acc. to DIN EN 60068-2-6 at 10 .. 500 Hz		≤ 20 g	
Protection class acc. to DIN EN 60529 [3)]		IP 67	
Relevant data for Ex applications		**Ex ia, ic**	**Ex nA, ta, tb, tc**
Supply voltage		12 .. 28 V DC	12 .. 28 V DC
Max. input current		Ii = 100 mA	
Max. input power		Pi = 1 W	Max. power consumption ≤ 1 W
Connection capacitance of the sensor		Ci ≤ 22 nF	
Inductance of the sensor		Li = 0 mH	
Insulation voltage [4)]		50 V AC, with integrated overvoltage protection acc. to EN 61000-6-2	
Other data			
Residual ripple of supply voltage		≤ 5 %	
Current consumption		≤ 25 mA	
Life expectancy		> 10 million cycles (0 .. 100 % FS)	
Weight		~ 150 g	

Note: Reverse polarity protection of the supply voltage, excess voltage, override and short circuit protection are provided.
FS (**F**ull **S**cale) = relative to complete measuring range; **B.F.S.L.** = **B**est **F**it **S**traight **L**ine

[1)] -20 °C with FKM seal or EPDM seal, -40 °C on request
[2)] With M12x1 male connector, only up to -25 °C
[3)] With mounted mating connector in corresponding protection class
[4)] 500 V AC on request

Fields of application:

Code no. for use in model code	1			9	A	C
ATEX **KEMA 05 ATEX 1016X**	I M1 Ex ia I Ma	II 1G Ex ia IIC T6 Ga II 1/2G Ex ia IIC T6 Ga/Gb II 1D Ex ia IIIC T85 °C Da	II 2G Ex ia IIC T6 Gb	II 3G Ex nA IIC T6, T5 Gc	II 1D Ex ta IIIC T80/T90 °C T_{500}90 °C, T_{500}100 °C Da II 2D Ex tb IIIC T80/T90 °C Db	II 3G Ex ic IIC T6, T5 Gc II 3D Ex ic IIIC T80/T90 °C Dc
IECEx **KEM 08.0014X**	Ex ia I Ma	Ex ia IIC T6 Ga Ex ia IIC T6 Ga/Gb Ex ia IIIC T85 °C Da	Ex ia IIC T6 Gb	Ex nA IIC T6, T5 Gc	Ex ta IIIC T80/T90 °C T_{500}90 °C, T_{500}100 °C Da Ex tb IIIC T80/T90 °C Db	Ex ic IIC T6, T5 Gc Ex ic IIIC T80/T90 °C Dc
Application fields	Mining Protection type: intrinsically safe ia with barrier	Gases/conductive dust Protection type: intrinsically safe ia with barrier	Gases Protection type: intrinsically safe ia with barrier	Gases Protection type: non-sparking nA	Conductive dust Protection type: dustproof enclosure	Gases/conductive dust Protection type: intrinsically safe ic with barrier
Electrical connection **(see model code)**	5, 6	5, 6	5, 6	6	6	5, 6

Instruments for other protection types and zones (see cover) are available upon request.

Model code:

HDA 4 1 4 X – A – XXXX – E N X – 000 –X 1

Mechanical connection
4 = G1/4 A ISO 1179-2

Electrical connection
5 = male, EN175301-803, 3 pole + PE
(IP 67 mating connector supplied)
6 = male M12x1, 4 pole
(mating connector not supplied)

Output signal
A = 4 .. 20 mA, 2-conductor

Measuring ranges in bar
01.0; 02.5

Approval
E = ATEX
IECEx

Insulation voltage
N = 50 V AC to housing

Protection types and applications (code)

	ATEX		IECEx	
1 =	I M1	Ex ia I Ma	Ex ia I Ma	
	II 1G	Ex ia IIC T6 Ga	Ex ia IIC T6 Ga	
	II 1/2 G	Ex ia IIC T6 Ga/Gb	Ex ia IIC T6 Ga/Gb	
	II 2 G	Ex ia IIC T6 Gb	Ex ia IIC T6 Gb	
	II 1D	Ex ia IIIC T85 °C Da	Ex ia IIIC T85 °C Da	
9 =	II 3G	Ex nA IIC T6, T5 Gc	Ex nA IIC T6, T5 Gc	
	Only in conjunction with electr. connection "6" and the impact protection metal safety sleeve (see dimensions)			
A =	II 1D	Ex ta IIIC T80/T90 °C T_{500}90 °C, T_{500}100 °C Da	Ex ta IIIC T80/T90 °C Da T_{500}90 °C, T_{500}100 °C Da	
	II 2D	Ex tb IIIC T80/T90 °C Db	Ex tb IIIC T80/T90 °C Db	
	Only in conjunction with electr. connection "6" and the impact protection metal safety sleeve (see dimensions)			
C =	II 3G	Ex ic IIC T6, T5 Gc	Ex ic IIC T6, T5 Gc	
	II 3D	Ex ic IIIC T80/T90 °C Dc	Ex ic IIIC T80/T90 °C Dc	

Modification number
000 = standard

Sealing material (in contact with fluid)
F = FKM seal (e.g. for hydraulic oils)
E = EPDM seal (e.g. for refrigerants)

Connection material (in contact with fluid)
1 = stainless steel

Dimensions:

Protection types and applications (code): 1, C

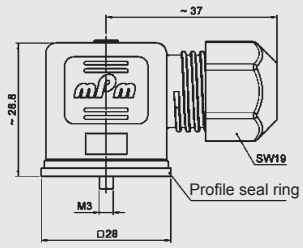

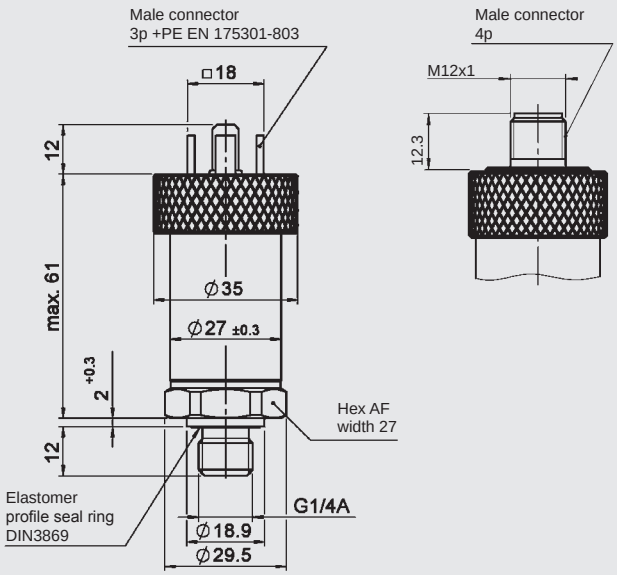

With impact protection metal safety sleeve:

Protection types and applications (code): 9, A

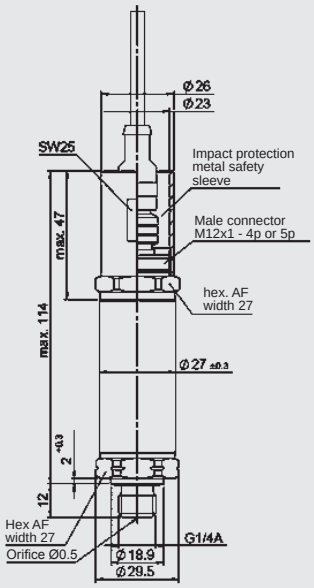

The impact protection metal safety sleeve is included. A straight mating connector is required for electrical connection. E.g. mating connector M12x1, 4 pole, straight, with 3 m shielded cable: ZBE 06S-03, part no. 6098243

Pin connections:

EN175301-803

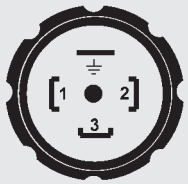

Pin	HDA 4145-A
1	Signal +
2	Signal -
3	n.c.
⊥	Housing

M12x1

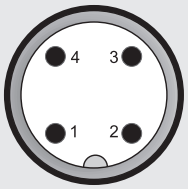

Pin	HDA 4146-A
1	Signal +
2	n.c.
3	Signal -
4	n.c.

Note:

The information in this brochure relates to the operating conditions and applications described.

For applications or operating conditions not described, please contact the relevant technical department.

Subject to technical modifications.

HYDAC ELECTRONIC GMBH
Hauptstr. 27, 66128 Saarbrücken
Germany
Phone +49 (0)6897 509-01
Fax +49 (0)6897 509-1726
e-mail: electronic@hydac.com
Internet: www.hydac.com

Pressure Transmitter HDA 4100 Ex applications

Absolute pressure | **Accuracy 0.5 %**

Intrinsically Safe, Dustproof enclosure
Non-Sparking
ATEX, IECEx, double approval
HART interface

Description:

The pressure transmitter HDA 4100 with HART interface is a compact pressure transmitter (intrinsically safe version) which is used to measure absolute pressures in hydraulics and pneumatics. The double approval in accordance with ATEX and IECEx enables universal, almost worldwide utilisation of the devices in potentially explosive atmospheres.

As with the industry model, the ATEX/IECEx version HDA 4100 has a ceramic measurement cell with thick-layer strain gauge.

In addition to the analogue 4 .. 20 mA output of the measured value, digital communication is possible by means of the HART protocol.

Intended fields of application are, for example, in the oil and gas industry, in mining, on gas turbines or in locations with high dust contamination, e.g. in mills.

Protection types and applications:

ATEX

I M1	Ex ia	I	Ma
II 1G	Ex ia	IIC	T6,T5 Ga
II 1/2 G	Ex ia	IIC	T6,T5 Ga/Gb
II 2 G	Ex ia	IIC	T6,T5 Gb
II 1D	Ex ia	IIIC	T85 °C/T95 °C Da
II 1D	Ex ta	IIIC	T80/90/100 °C T_{500}90/ T_{500}100/ T_{500}110 °C Da
II 2D	Ex tb	IIIC	T80/T90/T100 °C Db
II 3G	Ex nA	IIC	T6, T5, T4 Gc
II 3G	Ex ic	IIC	T6, T5, T4 Gc
II 3D	Ex tc	IIIC	T80/T90/T100 °C Dc
II 3D	Ex ic	IIIC	T80/T90/T100 °C Dc

IECEx

Ex ia	I	Ma
Ex ia	IIC	T6,T5 Ga
Ex ia	IIC	T6,T5 Ga/Gb
Ex ia	IIC	T6,T5 Gb
Ex ia	IIIC	T85/T95 °C Da
Ex ta	IIIC	T80/T90/T100 °C T_{500}90/T_{500}100/T_{500}110 °C Da
Ex tb	IIIC	T80/T90/T100 °C Db
Ex nA	IIC	T6,T5,T4 Gc
Ex ic	IIC	T6,T5,T4 Gc
Ex tc	IIIC	T80/T90/T100 °C Dc
Ex ic	IIIC	T80/T90/T100 °C Dc

Technical data:

Input data			
Measuring ranges	bar	1	2.5
Overload pressures	bar	3	8
Burst pressure	bar	5	12
Mechanical connection		G1/4 A ISO 1179-2	
Tightening torque, recommended		20 Nm	
Parts in contact with fluid		Sensor: Ceramic Mech. connection: 1.4301 Seal: FKM / EPDM	
Output data			
Output signal, permitted load resistance		4 .. 20 mA, 2-conductor, with HART protocol $R_{Lmax} = (U_B - 12\ V) / 20\ mA\ [k\Omega]$ for HART communication min. 250 Ω	
HART Communication		Acc. to HART 7 specifications	
HART Common Practice Commands, e.g.		Altering of measuring range limits (see table)	
		Zero point adjustment within max. 3 % of the span	
Accuracy acc. to DIN 16086, terminal based		≤ ± 0.5 % FS typ. ≤ ± 1 % FS max.	
Accuracy, B.F.S.L.		≤ ± 0.25 % FS typ. ≤ ± 0.5 % FS max.	
Temperature compensation Zero point		≤ ± 0.02 % FS / °C typ. ≤ ± 0.03 % FS / °C max.	
Temperature compensation Span		≤ ± 0.02 % FS / °C typ. ≤ ± 0.03 % FS / °C max.	
Non-linearity acc. to DIN 16086, terminal based		≤ ± 0.5 % FS max.	
Hysteresis		≤ ± 0.4 % FS max.	
Repeatability		≤ ± 0.1 % FS	
Rise time		≤ 25 ms	
Long-term drift		≤ ± 0.3 % FS typ. / year	
Environmental conditions			
Compensated temperature range		-25 .. +85 °C	
Operating/ambient temperature range [1) 2)]		T6, T80/T85 °C, T_{500} 90 °C T5, T90/T95 °C, T_{500} 100 °C T100, T_{500} 110 °C T4	Ta = -20 .. +60 °C Ta = -20 .. +70 °C Ta = -20 .. +80 °C Ta = -20 .. +85 °C
Storage temperature range		-40 .. +100 °C	
Fluid temperature range [1)2)]		T6, T80/T85 °C, T_{500} 90 °C T5, T90/T95 °C, T_{500} 100 °C T100 °C, T_{500} 110 °C T4	Ta = -20 .. +60 °C Ta = -20 .. +70 °C Ta = -20 .. +80 °C Ta = -20 .. +85 °C
CE mark		EN 61000-6-1 / 2 / 3 / 4 EN 60079-0 / 11 / 15 / 26 / 31 EN 50303	
Vibration resistance acc. to DIN EN 60068-2-6 at 10 .. 500 Hz		≤ 20 g	
Protection class acc. to DIN EN 60529[3)]		IP 67	
Relevant data for Ex applications		**Ex ia, ic**	**Ex nA, ta, tb, tc**
Supply voltage		12 .. 28 V DC	12 .. 28 V DC
Max. input current		Ii = 100 mA	
Max. input power		Pi = 0.7 W	Max. power consumption ≤ 1 W
Connection capacitance of the sensor		Ci ≤ 22 nF	
Inductance of the sensor		Li = 0 mH	
Insulation voltage[4)]		50 V AC, with integrated overvoltage protection acc. to EN 61000-6-2	
Other data			
Residual ripple of supply voltage		acc. to FSK Physical Layer Specification (HCF_SPEC-054)	
Current consumption		≤ 25 mA	
Life expectancy		> 10 million cycles (0 .. 100 % FS)	
Weight		~ 150 g	

Note: Reverse polarity protection of the supply voltage, excess voltage, override and short circuit protection are provided.
FS (**F**ull **S**cale) = relative to complete measuring range
B.F.S.L. = **B**est **F**it **S**traight **L**ine

[1)] -20 °C with FKM seal or EPDM seal, -40 °C on request
[2)] With M12x1 male connector, only up to -25 °C
[3)] With mounted mating connector in corresponding protection class
[4)] 500 V AC on request

Measuring range limits:

By means of HART Common Practice Commands, you have the opportunity to adjust the following measuring range limits:

Lower measuring range limit		Upper measuring range limit		Measuring span	
min	max	min	max	min	max
0 % FS	112.5 % FS	37.5 % FS	150 % FS	37.5 % FS	150 % FS

Fields of application:

Code no. for use in model code	1			9	A	C
ATEX DEKRA 13ATEX0031X DEKRA 13ATEX0032	I M1 Ex ia I Ma	II 1G Ex ia IIC T6,T5 Ga II 1/2G Ex ia IIC T6,T5 Ga/Gb II 1D Ex ia IIIC T85/T95°C Da	II 2G Ex ia IIC T6,T5 Gb	II 3G Ex nA IIC T6,T5 Gc	II 1D Ex ta IIIC T80/T90°C T_{500}T90/T_{500}T100°C Da II 2D Ex tb IIIC T80/T90°C Db	II 3G Ex ic IIC T6,T5 Gc II 3D Ex ic IIIC T80/T90°C Dc
IECEx DEK 14.0011X	Ex ia I Ma	Ex ia IIC T6,T5 Ga Ex ia IIC T6,T5 Ga/Gb Ex ia IIIC T85/T95°C Da	Ex ia IIC T6,T5 Gb	Ex nA IIC T6,T5 Gc	Ex ta IIIC T80/T90°C T_{500}T90/T_{500}T100°C Da Ex tb IIIC T80/T90°C Db	Ex ic IIC T6,T5 Gc Ex ic IIIC T80/T90°C Dc
Application fields	Mining Protection type: intrinsically safe ia with barrier	Gases/conductive dust Protection type: intrinsically safe ia with barrier	Gases Protection type: intrinsically safe ia with barrier	Gases Protection type: non-sparking nA	Conductive dust Protection type: dustproof enclosure	Gases/conductive dust Protection type: intrinsically safe ic with barrier
Electrical connection (see model code)	5, 6	5, 6	5, 6	6	6	5, 6

Instruments for other protection types and zones (see cover) are available upon request.

Model code:

HDA 4 1 4 X – F21 – XXXX – E N X – 000 – X 1

Mechanical connection
4 = G1/4 A ISO 1179-2

Electrical connection
5 = male, EN175301-803, 3 pole + PE
(IP 67 mating connector supplied)
6 = male M12x1, 4 pole
(mating connector not supplied)

Output signal
F21 = 4 .. 20 mA, 2-conductor, with HART protocol

Measuring ranges in bar
01.0; 02.5

Approval
E = ATEX
IECEx

Insulation voltage
N = 50 V AC to housing

Protection types and applications (code)

	ATEX	IECEx
1 =	I M1 Ex ia I Ma II 1G Ex ia IIC T6, T5 Ga II 1/2 G Ex ia IIC T6, T5 Ga/Gb II 2 G Ex ia IIC T6, T5 Gb II 1D Ex ia IIIC T85/T95 °C Gb Da	Ex ia I Ma Ex ia IIC T6 Ga Ex ia IIC T6 Ga/Gb Ex ia IIC T6 Gb Ex ia IIIC T85/T95 °C Gb
9 =	II 3G Ex nA IIC T6, T5 Gc Only in conjunction with electrical connection "6" and the impact protection metal safety sleeve (see dimensions)	Ex nA IIC T6, T5 Gc
A =	II 1D Ex ta IIIC T80/T90 °C Da T_{500}T90/T_{500}T100 °C Da II 2D Ex tb IIIC T80/T90 °C Db Only in conjunction with electrical connection "6" and the impact protection metal safety sleeve (see dimensions)	Ex ta IIIC T T80/T90 °C Da T_{500}T90/T_{500}T100 °C Da Ex tb IIIC T80/T90 °C Db
C =	II 3G Ex ic IIC T6, T5 Gc II 3D Ex ic IIIC T80/T90 °C Dc	Ex ic IIC T6, T5 Gc Ex ic IIIC T80/T90 °C Dc

Modification number
000 = standard

Sealing material (in contact with fluid)
F = FKM seal (e.g. for hydraulic oils)
E = EPDM seal (e.g. for refrigerants)

Connection material (in contact with fluid)
1 = stainless steel

Dimensions:

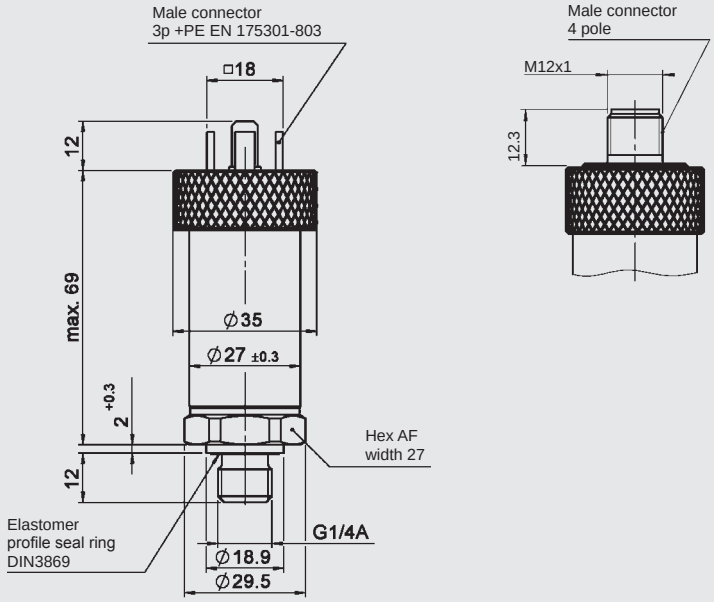

With impact protection metal safety sleeve:

Protection types and applications (code): 9, A

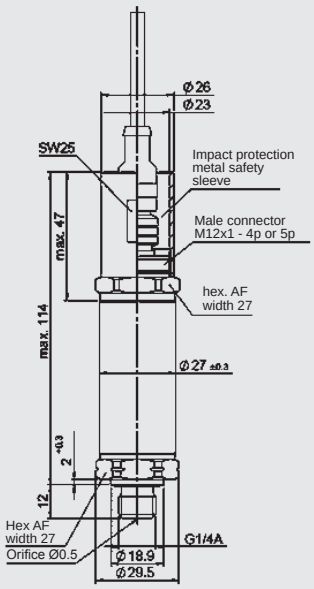

The impact protection metal safety sleeve is included. A straight mating connector is required for electrical connection. E.g. mating connector M12x1, 4 pole, straight, with 3 m shielded cable: ZBE 06S-03, part no. 6098243

Pin connections:

EN175301-803

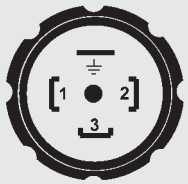

Pin	HDA 4145-F21
1	Signal +
2	Signal -
3	n.c.
⊥	PE

M12x1

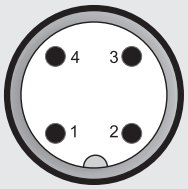

Pin	HDA 4146-F21
1	Signal +
2	n.c.
3	Signal -
4	n.c.

Note:

The information in this brochure relates to the operating conditions and applications described.

For applications or operating conditions not described, please contact the relevant technical department.

Subject to technical modifications.

HYDAC ELECTRONIC GMBH
Hauptstr. 27, 66128 Saarbrücken
Germany
Phone +49 (0)6897 509-01
Fax +49 (0)6897 509-1726
e-mail: electronic@hydac.com
Internet: www.hydac.com

Pressure Transmitter HDA 8400

Relative pressure | **Accuracy 0.5 %**

For the medium hydrogen (Minimum order quantity 500 units)

Description:

The pressure transmitter series HDA 8400 has been specially developed for use with hydrogen and for series applications, e.g. in the mobile sector. Like most of our pressure transmitter series, the HDA 8400 is based on a robust and long-life thin-film sensor.

All of the parts in contact with the fluid (sensor and pressure port) are made of stainless steel and are welded together. This means that there are no sealing points in the interior of the sensor. The possibility of leakage is excluded.

Due to the specially selected material, this HDA 8400 is especially suitable for use in hydrogen applications.

Technical data:

Input data											
Measuring ranges	bar	25	40	60	100	160	250	400	600	900	1050
Overload pressures	bar	50	80	120	200	320	500	800	1000	1400	1400
Burst pressure	bar	125	200	300	500	800	1250	2000	3000	3000	3000

Mechanical connection (Tightening torque, recommended)	SF250CX20, autoclave (7/16-20 UNF 2B) (15 Nm, 20 Nm at 900 bar) G 1/4 B DIN EN 837 (20 Nm) 9/16-18 UNF 2A (ISO 8434-3) (25 Nm)
Parts in contact with fluid	Stainless steel 1.4435 (Ni content ≥ 13%) Seal: Copper (Cu-DHP) (G 1/4 B); Zurcon®22 (polyurethane) (9/16-18 UNF 2A)
Output data	
Output signal	4 .. 20 mA, ratiometric, others available on request
Accuracy acc. to DIN 16086, terminal based	≤ ± 0.5 % FS typ. ≤ ± 1.0 % FS max.
Accuracy, B.F.S.L.	≤ ± 0.25 % FS typ. ≤ ± 0.5 % FS max.
Temperature compensation Zero point	≤ ± 0.015 % FS / °C typ. ≤ ± 0.025 % FS / °C max.
Temperature compensation Span	≤ ± 0.015 % FS / °C typ. ≤ ± 0.025 % FS / °C max.
Non-linearity acc. to DIN 16086, terminal based	≤ ± 0.3 % FS max.
Hysteresis	≤ ± 0.4 % FS max.
Repeatability	≤ ± 0.1 % FS
Rise time	≤ 2 ms
Long-term drift	≤ ± 0.3 % FS typ. / year
Environmental conditions	
Compensated temperature range	-25 .. +85 °C
Operating temperature range	-40 .. +100 °C
Storage temperature range	-40 .. +100 °C
Fluid temperature range	-40 .. +100 °C
CE mark	EN 61000-6-1 / 2 / 3 / 4
Vibration resistance acc. to DIN EN 60068-2-6 at 5 .. 2000 Hz	≤ 25 g
Shock resistance acc. to DIN EN 60068-2-27	100 g / 6 ms / half-sine 500 g / 1 ms / half-sine
Protection class acc. to DIN EN 60529 [1)] ISO 20653 [1)]	IP 67 IP 6K9K
Other data	
Electrical connection [2)]	M12x1, 4 pole, available in plastic or metal (solid version); Metri-Pack series 150, 3 pole
Supply voltage when applied acc. to UL specifications	8 .. 30 V DC; 5 V DC ± 5 % (ratiometric) - limited energy - acc. to 9.3 UL 61010; Class 2; UL 1310/1585; LPS UL 60950
Residual ripple of supply voltage	≤ 5 %
Life expectancy	> 1 million cycles (0 .. 100 % FS)
Weight	~ 55 g

Note: Reverse polarity protection of the supply voltage, excess voltage, override and short circuit protection are provided.
FS (**F**ull **S**cale) = relative to complete measuring range
B.F.S.L. = **B**est **F**it **S**traight **L**ine

[1)] With mounted mating connector in corresponding protection class
[2)] Other connection types/options available on request

Dimensions:

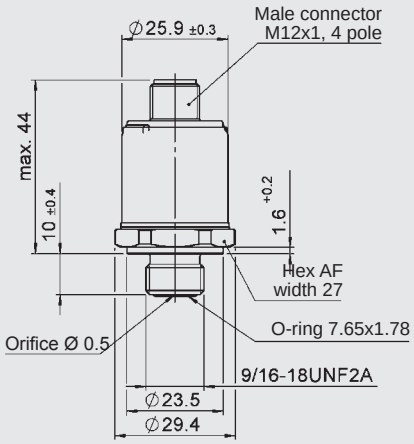

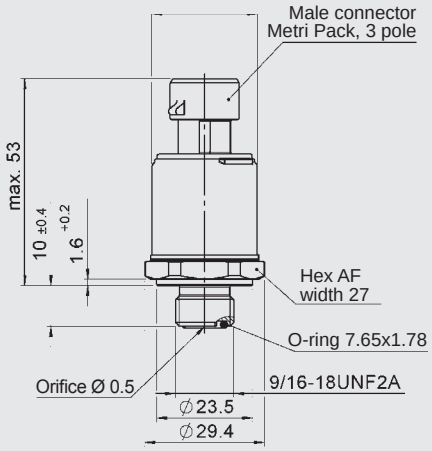

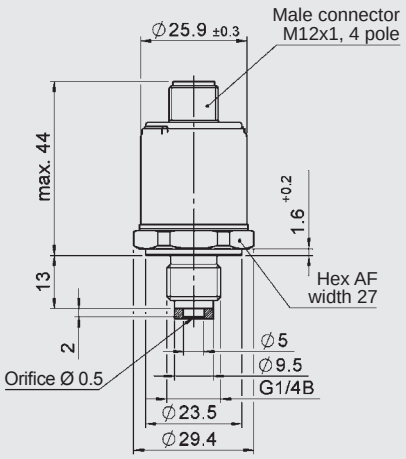

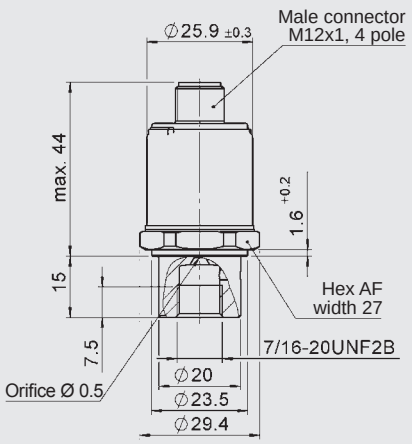

Pin connections:

M12x1, 4 pole

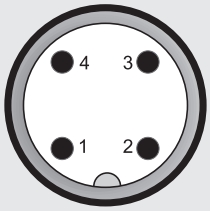

Pin	
1	Signal +
2	n.c.
3	Signal -
4	n.c.

Metri-Pack, 3 pole

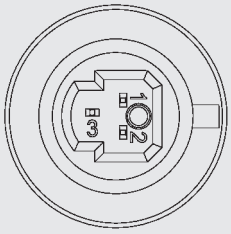

Pin	
1	Signal -
2	Signal +
3	n.c.

Note:

The information in this brochure relates to the operating conditions and applications described.

For applications or operating conditions not described, please contact the relevant technical department.

Subject to technical modifications.

HYDAC ELECTRONIC GMBH
Hauptstraße 27, 66128 Saarbrücken
Germany
Telephone +49 (0)6897 509-01
Fax +49 (0)6897 509-1726
E-mail: electronic@hydac.com
Internet: www.hydac.com

Pressure Transmitter HDA 8400

Relative pressure | **Accuracy 0.5 %**

For the medium hydrogen
Tested to EC 79
(Minimum order quantity 500 units)

EC 79 H_2

Description:

The pressure transmitter series HDA 8400 has been specially developed for use with hydrogen and for series applications, e.g. in the mobile sector. Like most of our pressure transmitter series, the HDA 8400 is based on a robust and long-life thin-film sensor.

All of the parts in contact with the fluid (sensor and pressure port) are made of stainless steel and are welded together. This means that there are no sealing points in the interior of the sensor. The possibility of leakage is excluded.

Due to the specially selected material, this HDA 8400 is suited especially for the use in hydrogen applications.

Component testing for type approval acc. to EC 79-2009 / V0 406-2010 has been concluded successfully.

Technical data:

Input data		
Measuring ranges	bar	900
Nominal operating pressure [1]	bar	700 [1]
Maximum permitted operating pressure [1]	bar	875 [1]
Burst pressure	bar	3000
Mechanical connection (Tightening torque, recommended)		SF250CX20, autoclave (7/16-20 UNF 2B) (20 Nm) G 1/4 B DIN EN 837 (20 Nm) 9/16-18 UNF 2A (ISO 8434-3) (25 Nm)
Parts in contact with fluid		Stainless steel 1.4435 (Ni content ≥ 13%) Seal: Copper (Cu-DHP) (G 1/4 B); Zurcon®22 (polyurethane) (9/16-18 UNF 2A)
Output data		
Output signal		4 .. 20 mA, ratiometric, others available on request
Accuracy acc. to DIN 16086, terminal based		≤ ± 0.5 % FS typ. ≤ ± 1.0 % FS max.
Accuracy, B.F.S.L.		≤ ± 0.25 % FS typ. ≤ ± 0.5 % FS max.
Temperature compensation Zero point		≤ ± 0.015 % FS / °C typ. ≤ ± 0.025 % FS / °C max.
Temperature compensation Span		≤ ± 0.015 % FS / °C typ. ≤ ± 0.025 % FS / °C max.
Non-linearity acc. to DIN 16086, terminal based		≤ ± 0.3 % FS max.
Hysteresis		≤ ± 0.4 % FS max.
Repeatability		≤ ± 0.1 % FS
Rise time		≤ 2 ms
Long-term drift		≤ ± 0.3 % FS typ. / year
Environmental conditions		
Compensated temperature range		-25 .. +85 °C
Operating temperature range		-40 .. +100 °C
Storage temperature range		-40 .. +100 °C
Fluid temperature range		-40 .. +100 °C
CE mark		EN 61000-6-1 / 2 / 3 / 4
Vibration resistance acc. to DIN EN 60068-2-6 at 5 .. 2000 Hz		≤ 25 g
Shock resistance acc. to DIN EN 60068-2-27		100 g / 6 ms / half-sine 500 g / 1 ms / half-sine
Protection class acc. to DIN EN 60529 [2] ISO 20653		IP 67 IP 6K9K
Other data		
Electrical connection		M12x1, 4 pole, available in plastic or metal (solid version); Metri-Pack series 150, 3 pole
Supply voltage when applied acc. to UL specifications		8 .. 30 V DC; 5 V DC ± 5 % (ratiometric) - limited energy - acc. to 9.3 UL 61010; Class 2; UL 1310/1585; LPS UL 60950
Residual ripple of supply voltage		≤ 5 %
Life expectancy		> 1 million cycles (0 .. 100 % FS)
Weight		~ 55 g

Note: Reverse polarity protection of the supply voltage, excess voltage, override and short circuit protection are provided.
FS (**F**ull **S**cale) = relative to complete measuring range
B.F.S.L. = **B**est **F**it **S**traight **L**ine

[1] Tested/validated acc. to EC 79/2009, nominal operation pressure 700 bar at reference temperature 20 °C, max. permitted operating pressure 875 bar
[2] With mounted mating connector in corresponding protection class

Dimensions:

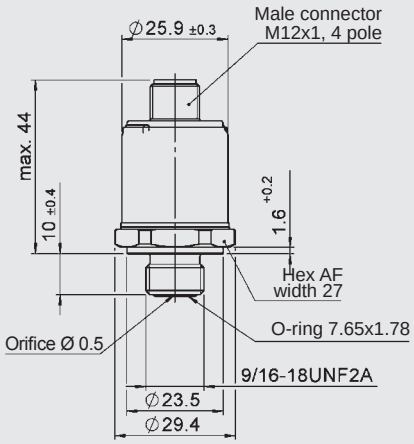

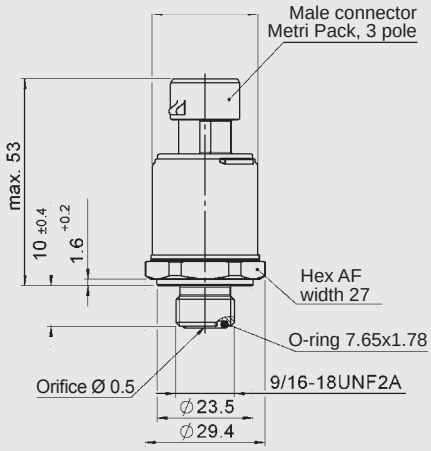

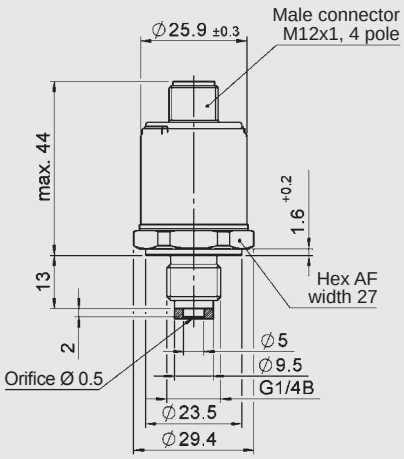

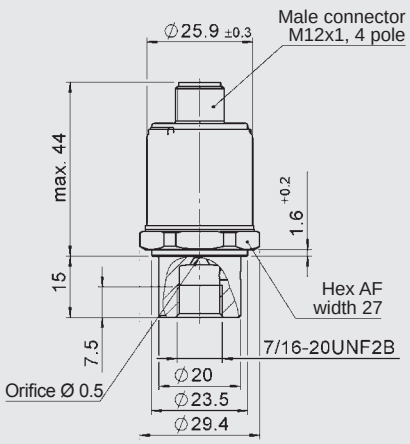

Pin connections:

M12x1, 4 pole

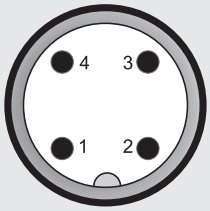

Pin	
1	Signal +
2	n.c.
3	Signal -
4	n.c.

Metri-Pack, 3 pole

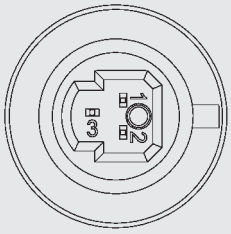

Pin	
1	Signal -
2	Signal +
3	n.c.

Note:

The information in this brochure relates to the operating conditions and applications described.

For applications or operating conditions not described, please contact the relevant technical department.

Subject to technical modifications.

HYDAC ELECTRONIC GMBH
Hauptstraße 27, 66128 Saarbrücken
Germany
Telephone +49 (0)6897 509-01
Fax +49 (0)6897 509-1726
E-mail: electronic@hydac.com
Internet: www.hydac.com

Pressure Transmitter HDA 4400 Ex applications

Relative pressure | **Accuracy 0.5 %**

Intrinsically Safe, Dustproof enclosure
Non-Sparking
ATEX, IECEx, double approval
For the medium hydrogen

Description:

This intrinsically safe version of the pressure transmitter HDA 4400 has been specially developed for the use in hydrogen applications and potentially explosive atmospheres and it is based on the HDA 4000 series. The dual approval in accordance with ATEX and IECEx enables universal, almost world-wide utilisation of the devices in potentially explosive atmospheres.

As with the industry model, the HDA 4400 has a pressure measurement cell with thin-film strain gauge on a stainless steel membrane.

The main fields of application are hydrogen fuelling stations.

Due to the specially selected material, this HDA 4400 is suited for the use in hydrogen applications.

Protection types and applications:

ATEX

I M1	Ex ia	I	Ma
II 1G	Ex ia	IIC	T6 Ga
II 1/2G	Ex ia	IIC	T6 Ga/Gb
II 2G	Ex ia	IIC	T6 Gb
II 1D	Ex ia	IIIC	T85 °C Da

IECEx

Ex ia	I	Ma
Ex ia	IIC	T6 Ga
Ex ia	IIC	T6 Ga/Gb
Ex ia	IIC	T6 Gb
Ex ia	IIIC	T85 °C Da

Technical data:

Input data										
Measuring range	bar	16	25	40	200	250	400	500	600	1050
Overload pressures	bar	50	50	80	500	500	800	1000	1000	1400
Burst pressure	bar	125	125	200	1250	1250	2000	3000	3000	3000

Mechanical connection (Tightening torque, recommended)	SF250CX20, autoclave (7/16-20 UNF 2B) (15 Nm for measuring range < 1000 bar) (20 Nm for measuring range 1050 bar) G 1/4 B DIN EN 837 (20 Nm for measuring range < 1000 bar) (40 Nm for measuring range 1050 bar)
Parts in contact with fluid	Stainless steel 1.4435 (Ni content ≥ 13 %) Seal: Copper (Cu-DHP) (G 1/4 B)
Output data	
Output signal, permitted load resistance	4 .. 20 mA, 2-conductor $R_{Lmax} = (U_B - 12\ V) / 20\ mA\ [k\Omega]$
Accuracy acc. to DIN 16086, terminal based	≤ ± 0.5 % FS typ. ≤ ± 1 % FS max.
Accuracy, B.F.S.L.	≤ ± 0.25 % FS typ. ≤ ± 0.5 % FS max.
Temperature compensation Zero point	≤ ± 0.015 % FS / °C typ. ≤ ± 0.025 % FS / °C max.
Temperature compensation Span	≤ ± 0.015 % FS / °C typ. ≤ ± 0.025 % FS / °C max.
Non-linearity acc. to DIN 16086, terminal based	≤ ± 0.3 % FS max.
Hysteresis	≤ ± 0.4 % FS max.
Repeatability	≤ ± 0.1 % FS
Rise time	≤ 2 ms
Long-term drift	≤ ± 0.3 % FS typ. / year
Environmental conditions	
Compensated temperature range	-25 .. +85 °C
Operating/ambient temperature range	Ta = -25 .. +60 °C
Storage temperature range	-40 .. +100 °C
Fluid temperature range	Ta = -25 .. +60 °C
CE mark	EN 61000-6-1 / 2 / 3 / 4 EN 60079-0 / 11 / 26 EN 50303
Vibration resistance acc. to DIN EN 60068-2-6 at 10 .. 500 Hz	≤ 20 g
Protection class acc. to DIN EN 60529 [1)]	IP 67
Relevant data for Ex applications	**Ex ia**
Supply voltage	12 .. 28 V DC
Max. input current	Ii = 100 mA
Max. input power	Pi = 1 W
Connection capacitance of the sensor	Ci ≤ 22 nF
Inductance of the sensor	Li = 0 mH
Insulation voltage	50 V AC, with integrated overvoltage protection acc. to EN 61000-6-2
Other data	
Residual ripple of supply voltage	≤ 5 %
Current consumption	≤ 25 mA
Life expectancy	> 1 million cycles (0 .. 100 % FS)
Weight	~ 150 g

Note: Reverse polarity protection of the supply voltage, excess voltage, override and short circuit protection are provided.
FS (**F**ull **S**cale) = relative to complete measuring range
B.F.S.L. = **B**est **F**it **S**traight **L**ine

[1)] With mounted mating connector in corresponding protection class

Fields of application:

Code no. for use in model code	1		
ATEX **KEMA 05 ATEX 1016X**	I M1 Ex ia I Ma	II 1G Ex ia IIC T6 Ga II 1/2G Ex ia IIC T6 Ga/Gb II 1D Ex ia IIIC T85 °C Da	II 2G Ex ia IIC T6 Gb
IECEx **KEM 08.0014X**	Ex ia I Ma	Ex ia IIC T6 Ga Ex ia IIC T6 Ga/Gb Ex ia IIIC T85 °C Da	Ex ia IIC T6 Gb
Application fields	Mining Protection type: intrinsically safe ia with barrier	Gases/conductive dust Protection type: intrinsically safe ia with barrier	Gases Protection type: intrinsically safe ia with barrier

Model code:

HDA 4 4 X 6 – A – XXXX – E N 1 – H00

Mechanical connection
C = SF250CX20, autoclave (7/16-20 UNF 2B)
G = G1/4 B DIN EN 837

Electrical connection
6 = male M12x1, 4 pole (mating connector not supplied)

Output signal
A = 4 .. 20 mA, 2-conductor

Measuring ranges in bar
0016; 0025; 0040; 0200; 0250; 0400; 0500; 0600; 1050

Approval
E = ATEX / IECEx

Insulation voltage
N = 50 V AC to housing

Protection types and applications (code)

	ATEX	IECEx
1 =	I M1 Ex ia I Ma	Ex ia I Ma
	II 1G Ex ia IIC T6 Ga	Ex ia IIC T6 Ga
	II 1/2 G Ex ia IIC T6 Ga/Gb	Ex ia IIC T6 Ga/Gb
	II 2 G Ex ia IIC T6 Gb	Ex ia IIC T6 Gb
	II 1D Ex ia IIIC T85 °C Da	Ex ia IIIC T85 °C Da

Modification number
H00 = standard

Dimensions:

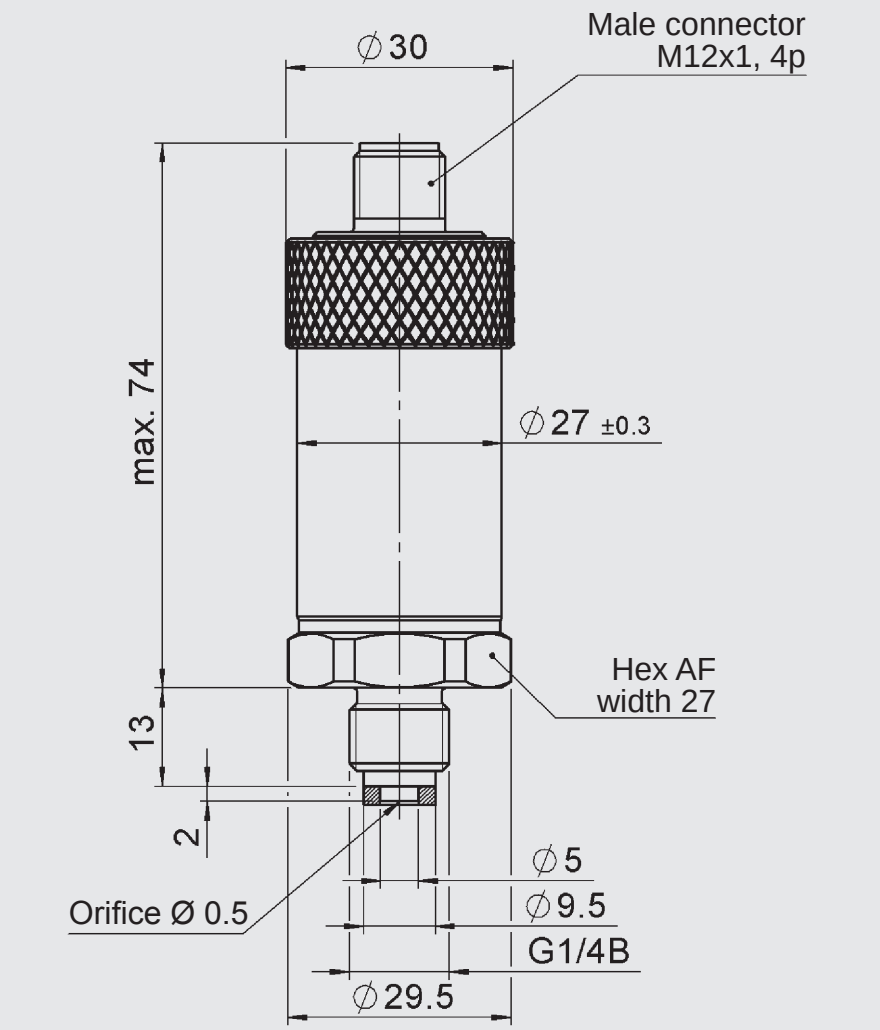

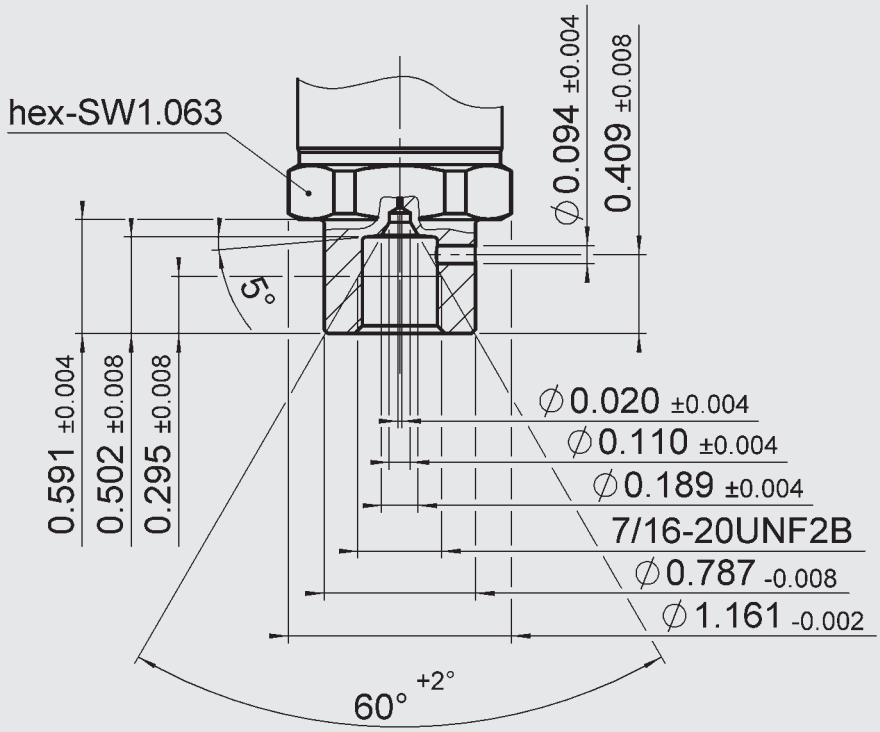

Pin connections:

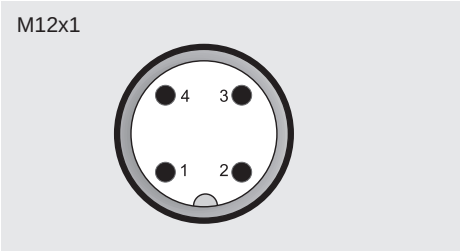

Pin	HDA 44X6-A
1	+ Sig
2	n.c.
3	- Sig
4	n.c.

Note:

The information in this brochure relates to the operating conditions and applications described.

For applications or operating conditions not described, please contact the relevant technical department.

Subject to technical modifications.

HYDAC ELECTRONIC GMBH
Hauptstr. 27, 66128 Saarbrücken
Germany
Telephone +49 (0)6897 509-01
Fax +49 (0)6897 509-1726
e-mail: electronic@hydac.com
Internet: www.hydac.com

Pressure Transmitter HDA 4400 Ex applications

Relative pressure | **Accuracy 0.5 %**

Intrinsically Safe, Dustproof enclosure
ATEX, IECEx, double approval
For the medium hydrogen
Redundant

Description:

This intrinsically safe version of the pressure transmitter has been specially developed for use in hydrogen applications and potentially explosive atmospheres and it is based on the HDA 4000 series.

Thanks to the use of two highly accurate and robust pressure measurement cells with thin-film strain gauge on a stainless steel membrane, each with their own electronics, the device has a fully redundant architecture and thus two separate and independent output signals.

The two output signals are output in inverted form (signal 1 = 4 .. 20 mA and signal 2 = 20 .. 4 mA). This means that the energy in the intrinsically safe current circuit is kept constant as the sum of the output signals at any pressure is 24 mA.
Connection is via a two-channel barrier.

The double approval in accordance with ATEX and IECEx enables universal, almost worldwide utilisation of the devices in potentially explosive atmospheres.

Thanks to the redundant structure, the sensor is also suitable for safety circuits/functions in the oil and gas industry. The device is also used in mining applications as well as in locations with high dust contamination.

The fields of application are thus in safety-oriented systems.

Due to the specially selected material, this HDA 4400 is suitable for use in hydrogen applications.

Protection types and applications:

ATEX

I M1	Ex ia	I	Ma
II 1G	Ex ia	IIC	T6, T5 Ga
II 1/2G	Ex ia	IIC	T6, T5 Ga/Gb
II 2G	Ex ia	IIC	T6, T5 Gb
II 1D	Ex ia	IIIC	T85/T95 °C Da

IECEx

Ex ia	I	Ma
Ex ia	IIC	T6, T5 Ga
Ex ia	IIC	T6, T5 Ga/Gb
Ex ia	IIC	T6, T5 Gb
Ex ia	IIIC	T85/T95 °C Da

Technical data:

Input data										
Measuring range Signal 1	bar	16	25	40	200	250	400	500	600	1050
Measuring range Signal 2	bar	16	25	40	200	250	400	500	600	1050
Overload pressures	bar	50	50	80	500	500	800	1000	1000	1400
Burst pressure	bar	125	125	200	1250	1250	2000	3000	3000	3000

Mechanical connection	SF250CX20, autoclave (7/16-20 UNF 2B)
(Tightening torque, recommended)	15 Nm for measuring range < 1000 bar 20 Nm for measuring range 1050 bar
Parts in contact with fluid	Stainless steel 1.4435 (Ni content ≥ 13 %)
Output data	
Output signal 1 Output signal 2 Permitted load resistance, each	4 .. 20 mA, 2-conductor 20 .. 4 mA, 2-conductor $R_{Lmax} = (U_B - 12\ V) / 20\ mA\ [k\Omega]$
Accuracy acc. to DIN 16086, terminal based	≤ ± 0.5 % FS typ. ≤ ± 1 % FS max.
Accuracy, B.F.S.L.	≤ ± 0.25 % FS typ. ≤ ± 0.5 % FS max.
Temperature compensation Zero point	≤ ± 0.015 % FS / °C typ. ≤ ± 0.025 % FS / °C max.
Temperature compensation Span	≤ ± 0.015 % FS / °C typ. ≤ ± 0.025 % FS / °C max.
Non-linearity acc. to DIN 16086, terminal based	≤ ± 0.3 % FS max.
Hysteresis	≤ ± 0.4 % FS max.
Repeatability	≤ ± 0.1 % FS
Rise time	≤ 2 ms
Long-term drift	≤ ± 0.3 % FS typ. / year
Environmental conditions	
Compensated temperature range	-25 .. +85 °C
Operating/ambient temperature range	T6, T85 °C Ta = -25 .. 60 °C T5, T95 °C Ta = -25 .. 70 °C
Storage temperature range	-40 .. +100 °C
Fluid temperature range	T6, T85 °C Ta = -25 .. 60 °C T5, T95 °C Ta = -25 .. 70 °C
CE mark	EN 61000-6-1 / 2 / 3 / 4 EN 60079-0 / 11 / 26 EN 50303
Vibration resistance acc. to DIN EN 60068-2-6 at 10 .. 500 Hz	≤ 20 g
Protection class acc. to DIN EN 60529 [1)]	IP 67
Relevant data for Ex applications	**Ex ia**
Supply voltage	12 .. 28 V DC
Max. input current	Ii = 100 mA
Max. input power	Pi = 0.7 W
Connection capacitance of the sensor	Ci ≤ 22 nF
Inductance of the sensor	Li = 0 mH
Intrinsic safety barrier	2-channel, R_{min} = 280 Ω (e.g. Pepperl & Fuchs Z789)
Insulation voltage	50 V AC, with integrated overvoltage protection acc. to EN 61000-6-2
Other data	
Residual ripple of supply voltage	≤ 5 %
Current consumption	≤ 25 mA
Life expectancy	> 1 million cycles (0 .. 100 % FS)
Weight	~ 200 g

Note: Reverse polarity protection of the supply voltage, excess voltage, override and short circuit protection are provided.
FS (**F**ull **S**cale) = relative to complete measuring range
B.F.S.L. = **B**est **F**it **S**traight **L**ine

[1)] With mounted mating connector in corresponding protection class

Fields of application:

Code no. for use in model code	1		
ATEX **KEMA 05 ATEX 1016X**	I M1 Ex ia I Ma	II 1G Ex ia IIC T6, T5 Ga II 1/2G Ex ia IIC T6, T5 Ga/Gb II 1D Ex ia IIIC T85/T95 °C Da	II 2G Ex ia IIC T6, T5 Gb
IECEx **KEM 08.0014X**	Ex ia I Ma	Ex ia IIC T6, T5 Ga Ex ia IIC T6, T5 Ga/Gb Ex ia IIIC T85/T95 °C Da	Ex ia IIC T6, T5 Gb
Application fields	Mining Protection type: intrinsically safe ia with barrier	Gases/conductive dust Protection type: intrinsically safe ia with barrier	Gases Protection type: intrinsically safe ia with barrier

Model code:

HDA 4 4 C 6 – AA – XXXX – XXXX – E N 1 – H00

Mechanical connection
C = SF250CX20, autoclave (7/16-20 UNF 2B)

Electrical connection
6 = male M12x1, 4 pole (mating connector not supplied)

Output signal 1
A = 4 .. 20 mA, 2-conductor

Output signal 2
A = 20 .. 4 mA, 2-conductor

Measuring ranges in bar (output signal 1)
0016; 0025; 0040; 0200; 0250; 0400; 0500; 0600; 1050

Measuring ranges in bar (output signal 2)
0016; 0025; 0040; 0200; 0250; 0400; 0500; 0600; 1050

Approval
E = ATEX / IECEx

Insulation voltage
N = 50 V AC to housing

Protection types and applications (code)

	ATEX	IECEx
1 =	I M1 Ex ia I Ma	Ex ia I Ma
	II 1G Ex ia IIC T6, T5 Ga	Ex ia IIC T6, T5 Ga
	II 1/2 G Ex ia IIC T6, T5 Ga/Gb	Ex ia IIC T6, T5 Ga/Gb
	II 2 G Ex ia IIC T6, T5 Gb	Ex ia IIC T6, T5 Gb
	II 1D Ex ia IIIC T85/T95 °C Da	Ex ia IIIC T85/T95 °C Da

Modification number
H00 = standard

Dimensions:

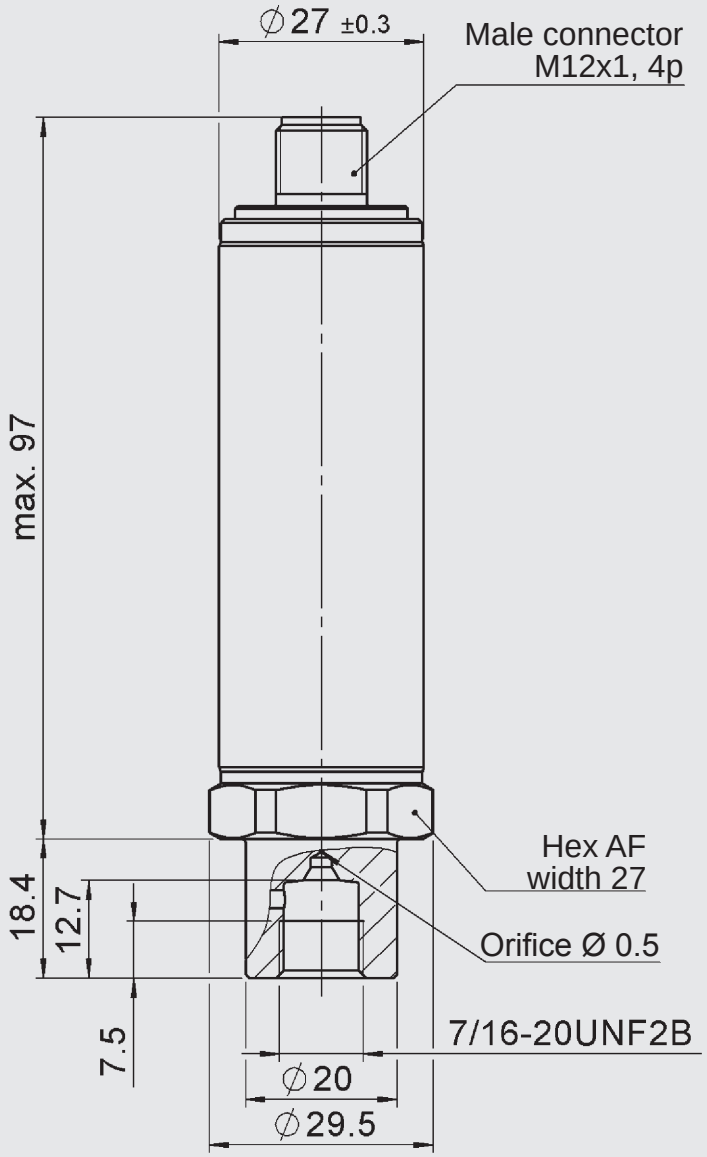

Pin connections:

M12x1

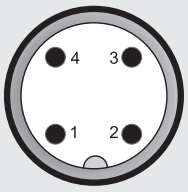

Pin	HDA 44C6-AA
1	+ Sig 1 (for output signal 1)
2	- Sig 1 (for output signal 1)
3	+ Sig 2 (for output signal 2)
4	- Sig 2 (for output signal 2)

Note:

The information in this brochure relates to the operating conditions and applications described.

For applications or operating conditions not described, please contact the relevant technical department.

Subject to technical modifications.

HYDAC ELECTRONIC GMBH
Hauptstr. 27, 66128 Saarbrücken
Germany
Telephone +49 (0)6897 509-01
Fax +49 (0)6897 509-1726
e-mail: electronic@hydac.com
Internet: www.hydac.com

Pressure Transmitter HDA 4300 shipping applications

Relative pressure | **Accuracy 0.5 %**

Description:

This pressure transmitter has been specially developed for shipbuilding applications and is based on the HDA 4000 series.

The HDA 4300 has a ceramic measurement cell with thick-layer strain gauge for measuring relative pressure in the low pressure range.

The evaluation electronics converts the measured pressure into a proportional analogue signal of 4 .. 20 mA.

The electronic module is completely potted to protect it against humidity, vibrations and shock, and is enclosed in a solid stainless steel housing.

For use in the shipping industry, these pressure transmitters have been approved by the following organisations.

Approvals:

- American Bureau of Shipping
- Lloyds Register of Ships
- Det Norske Veritas/ Germanischer Lloyd
- Bureau Veritas

Other approvals on request

Technical data:

Input data											
Measuring ranges	bar	1	2.5	4	6	10	16	25	40	-1 .. 5	-1 .. 9
Overload pressures	bar	3	8	12	20	32	50	80	120	20	32
Burst pressure	bar	5	12	18	30	48	75	120	180	30	48
Mechanical connection					G1/4 A ISO 1179-2						
Tightening torque, recommended					20 Nm						
Parts in contact with fluid					Mech. connection: Stainless steel Sensor cell: Ceramic Seal: FKM/EPDM (as per model code)						
Output data											
Output signal, permitted load resistance					4 .. 20 mA, 2-conductor $R_{Lmax.} = (U_B - 10\ V) / 20\ mA\ [k\Omega]$						
Accuracy acc. to DIN 16086, terminal based					≤ ± 0.5 % FS typ. ≤ ± 1 % FS max.						
Accuracy, B.F.S.L.					≤ ± 0.25 % FS typ. ≤ ± 0.5 % FS max.						
Temperature compensation Zero point					≤ ± 0.02 % FS / °C typ. ≤ ± 0.03 % FS / °C max.						
Temperature compensation Span					≤ ± 0.02 % FS / °C typ. ≤ ± 0.03 % FS / °C max.						
Non-linearity acc. to DIN 16086, terminal based					≤ ± 0.5 % FS max.						
Hysteresis					≤ ± 0.4 % FS max.						
Repeatability					≤ ± 0.1 % FS						
Rise time					≤ 1 ms						
Long-term drift					≤ ± 0.3 % FS typ. / year						
Environmental conditions											
Compensated temperature range					-25 .. +85 °C						
Operating temperature range [1]					-30 .. +85 °C / -25 .. +85 °C						
Storage temperature range					-30 .. +100 °C						
Fluid temperature range [1]					-30 .. +100 °C / -25 .. +100 °C						
CE mark					EN 61000-6-1 / 2 / 3 / 4						
Vibration resistance acc. to DIN EN 60068-2-6 at 5 .. 500 Hz					≤ 20 g						
Protection class acc. to DIN EN 60529 [2]					IP 67						
Other data											
Supply voltage					10 .. 32 V DC						
Residual ripple of supply voltage					≤ 5 %						
Life expectancy					> 10 million cycles, 0 .. 100 % FS						
Weight					~ 150 g						

Note: Reverse polarity protection of the supply voltage, excess voltage, override and short circuit protection are provided.
FS (**F**ull **S**cale) = relative to complete measuring range
B.F.S.L. = **B**est **F**it **S**traight **L**ine

[1] -25 °C with FKM or EPDM seal, -30 °C on request
[2] With mounted mating connector in corresponding protection class

Dimensions:

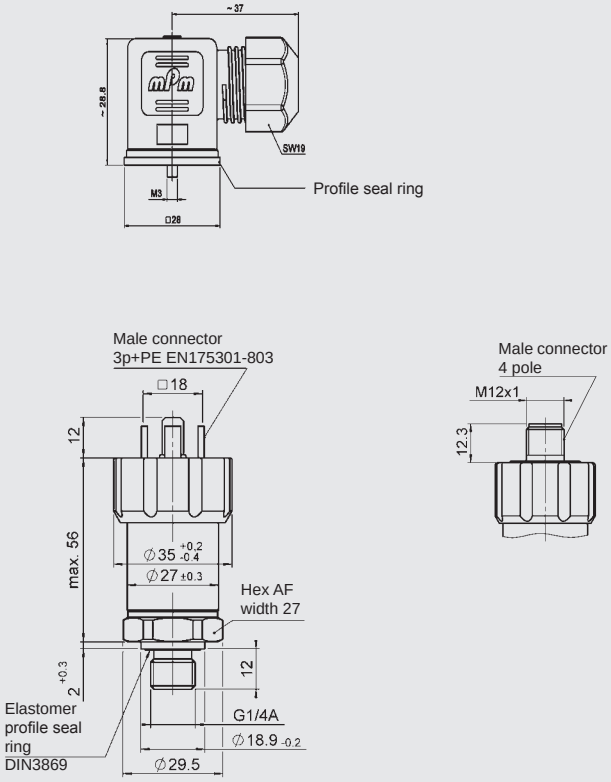

Pin connections:

EN175301-803

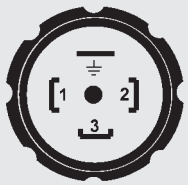

Pin	HDA 4345-A
1	Signal +
2	Signal -
3	n.c.
⊥	Housing

M12x1

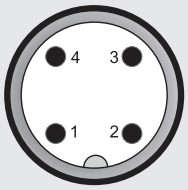

Pin	HDA 4346-A
1	Signal +
2	n.c.
3	Signal -
4	n.c.

Model code:

HDA 4 3 4 X – A – XXXX – S00 – X 1

Mechanical connection
4 = G1/4 A ISO 1179-2

Electrical connection
5 = male, EN175301-803, 3 pole + PE
(IP 67 mating connector supplied)
6 = male M12x1, 4 pole
(mating connector not supplied)

Output signal
A = 4 .. 20 mA, 2-conductor

Measuring ranges in bar
01.0; 02.5; 04.0; 06.0; 0010; 0016; 0025; 0040
0005 (-1 .. 5); 0009 (-1 .. 9)

Modification number
S00 = with approvals for shipping

Sealing material (in contact with fluid)
F = FKM seal (e.g. for hydraulic oils)
E = EPDM seal (e.g. for refrigerants)

Connection material (in contact with fluid)
1 = stainless steel

Accessories:
Appropriate accessories, such as mating connectors, can be found in the Accessories brochure.

Note:

The information in this brochure relates to the operating conditions and applications described.

For applications or operating conditions not described, please contact the relevant technical department.

Subject to technical modifications.

HYDAC ELECTRONIC GMBH
Hauptstraße 27, 66128 Saarbrücken
Germany
Telephone +49 (0)6897 509-01
Fax +49 (0)6897 509-1726
E-mail: electronic@hydac.com
Internet: www.hydac.com

Pressure Transmitter HDA 4400 shipping applications

Relative pressure | **Accuracy 0.5 %**

Description:

This pressure transmitter has been specially developed for shipbuilding applications and is based on the HDA 4000 series.

The HDA 4400 is designed to measure relative pressures in the high pressure range by means of its sensor measurement cell with thin-film strain gauge on a stainless steel membrane.

The evaluation electronics converts the measured pressure into a proportional analogue signal of 4 .. 20 mA.

The electronic module is completely potted to protect it against humidity, vibrations and shock, and is enclosed in a solid stainless steel housing.

For use in the shipping industry, these pressure transmitters have been approved by the following organisations.

Approvals:

- American Bureau of Shipping
- Lloyds Register of Ships
- Det Norske Veritas/ Germanischer Lloyd
- Bureau Veritas

Other approvals on request

Technical data:

Input data											
Measuring ranges	bar	6	16	40	60	100	250	400	600	1000[1]	1600[1]
Overload pressures	bar	15	32	80	120	200	500	800	1000	1600	2400
Burst pressure	bar	100	200	200	300	500	1000	2000	2000	3000	3000
Mechanical connection					G1/4 A ISO 1179-2 G1/2 B DIN EN 837						
Tightening torque, recommended					20 Nm (G1/4), 45 Nm (G1/2)						
Parts in contact with fluid					Mech. connection: Stainless steel Seal: FKM						
Output data											
Output signal, permitted load resistance					4 .. 20 mA, 2-conductor $R_{Lmax} = (U_B - 10\ V) / 20\ mA\ [k\Omega]$						
Accuracy acc. to DIN 16086, terminal based					≤ ± 0.5 % FS typ. ≤ ± 1 % FS max.						
Accuracy, B.F.S.L.					≤ ± 0.25 % FS typ. ≤ ± 0.5 % FS max.						
Temperature compensation Zero point					≤ ± 0.015 % FS / °C typ. ≤ ± 0.025 % FS / °C max.						
Temperature compensation Span					≤ ± 0.015 % FS / °C typ. ≤ ± 0.025 % FS / °C max.						
Non-linearity acc. to DIN 16086, terminal based					≤ ± 0.3 % FS max.						
Hysteresis					≤ ± 0.4 % FS max.						
Repeatability					≤ ± 0.1 % FS						
Rise time					≤ 1 ms						
Long-term drift					≤ ± 0.3 % FS typ. / year						
Environmental conditions											
Compensated temperature range					-25 .. +85 °C						
Operating temperature range [2]					-40 .. +85 °C / -25 .. +85 °C						
Storage temperature range					-40 .. +100 °C						
Fluid temperature range [2]					-40 .. +100 °C / -25 .. +100 °C						
CE mark					EN 61000-6-1 / 2 / 3 / 4						
Vibration resistance acc. to DIN EN 60068-2-6 at 5 .. 500 Hz					≤ 20 g						
Protection class acc. to DIN EN 60529 [3]					IP 67						
Other data											
Supply voltage					10 .. 32 V DC						
Residual ripple of supply voltage					≤ 5 %						
Life expectancy [4]					> 10 million cycles, 0 .. 100 % FS						
Weight					~ 150 g						

Note: Reverse polarity protection of the supply voltage, excess voltage, override and short circuit protection are provided.
FS (**F**ull **S**cale) = relative to complete measuring range
B.F.S.L. = **B**est **F**it **S**traight **L**ine

[1] Measuring ranges: approval for Lloyds Register on request
[2] -25 °C with FKM seal, -40 °C on request
[3] With mounted mating connector in corresponding protection class
[4] Measuring ranges ≥ 1000 bar: > 1 million cycles (0 .. 100 % FS)

Dimensions:

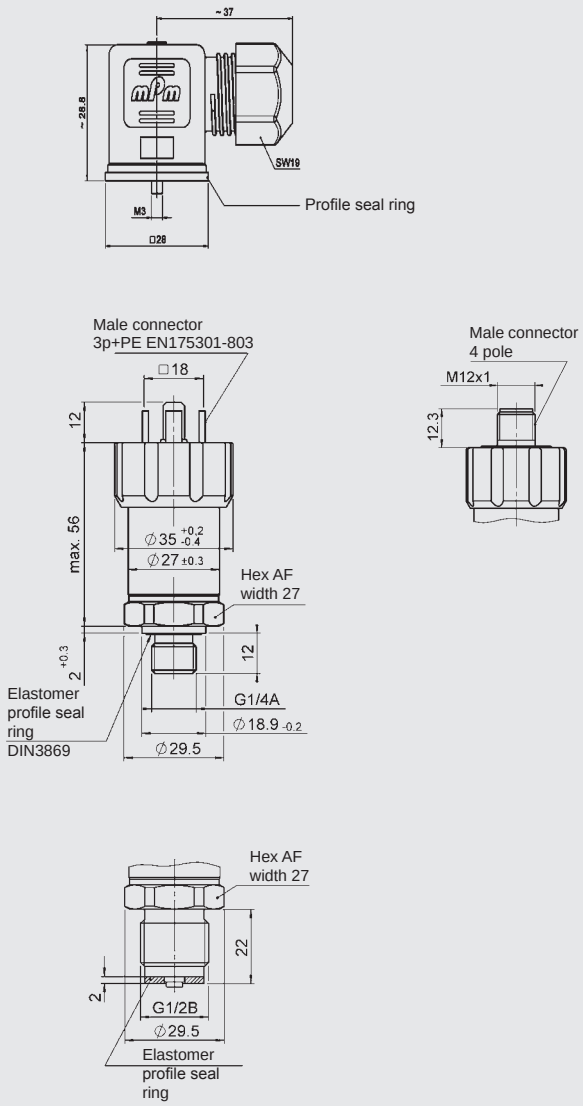

Model code:

HDA 4 4 X X – A – XXXX – S00

Mechanical connection
1 = G1/2 B DIN EN 837
4 = G1/4 A ISO 1179-2

Electrical connection
5 = male, EN175301-803, 3 pole + PE
(IP 67 mating connector supplied)
6 = male M12x1, 4 pole
(mating connector not supplied)

Output signal
A = 4 .. 20 mA, 2-conductor

Measuring ranges in bar
0006; 0016; 0040; 0060; 0100; 0250; 0400; 0600
1000; 1600 bar (only with mech. connection code "1")

Modification number
S00 = with approvals for shipping

Accessories:
Appropriate accessories, such as mating connectors, can be found in the Accessories brochure.

Pin connections:

EN175301-803

Pin	HDA 44X5-A
1	Signal +
2	Signal -
3	n.c.
⊥	Housing

M12x1

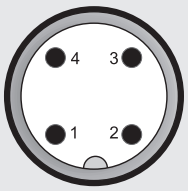

Pin	HDA 44X6-A
1	Signal +
2	n.c.
3	Signal -
4	n.c.

Note:

The information in this brochure relates to the operating conditions and applications described.

For applications or operating conditions not described, please contact the relevant technical department.

Subject to technical modifications.

HYDAC ELECTRONIC GMBH
Hauptstr. 27, 66128 Saarbrücken
Germany
Telephone +49 (0)6897 509-01
Fax +49 (0)6897 509-1726
e-mail: electronic@hydac.com
Internet: www.hydac.com

Pressure Transmitter HDA 4700 shipping applications

Relative pressure | **Accuracy 0.25 %**

Description:

This pressure transmitter has been specially developed for shipbuilding applications and is based on the HDA 4000 series.

The HDA 4700 is designed to measure relative pressures in the high pressure range by means of its sensor measurement cell with thin-film strain gauge on a stainless steel membrane.

The evaluation electronics converts the measured pressure into a proportional analogue signal of 4 .. 20 mA.

The electronic module is completely potted to protect it against humidity, vibrations and shock, and is enclosed in a solid stainless steel housing.

For use in the shipping industry, these pressure transmitters have been approved by the following organisations.

Approvals:

- American Bureau of Shipping
- Lloyds Register of Ships
- Det Norske Veritas/ Germanischer Lloyd
- Bureau Veritas

Other approvals on request

Technical data:

Input data											
Measuring ranges	bar	6	16	40	60	100	250	400	600	1000[1]	1600[1]
Overload pressures	bar	15	32	80	120	200	500	800	1000	1600	2400
Burst pressure	bar	100	200	200	300	500	1000	2000	2000	3000	3000
Mechanical connection					G1/4 A ISO 1179-2 G1/2 B DIN EN 837						
Tightening torque, recommended					20 Nm (G1/4), 45 Nm (G1/2)						
Parts in contact with fluid					Mech. connection: Stainless steel Seal: FKM						
Output data											
Output signal, permitted load resistance					4 .. 20 mA, 2-conductor $R_{Lmax} = (U_B - 10\ V) / 20\ mA\ [k\Omega]$						
Accuracy acc. to DIN 16086, terminal based					≤ ± 0.25 % FS typ. ≤ ± 0.5 % FS max.						
Accuracy, B.F.S.L.					≤ ± 0.15 % FS typ. ≤ ± 0.25 % FS max.						
Temperature compensation Zero point					≤ ± 0.008 % FS / °C typ. ≤ ± 0.015 % FS / °C max.						
Temperature compensation Span					≤ ± 0.008 % FS / °C typ. ≤ ± 0.015 % FS / °C max.						
Non-linearity acc. to DIN 16086, terminal based					≤ ± 0.3 % FS max.						
Hysteresis					≤ ± 0.1 % FS max.						
Repeatability					≤ ± 0.05 % FS						
Rise time					≤ 1 ms						
Long-term drift					≤ ± 0.1 % FS typ. / year						
Environmental conditions											
Compensated temperature range					-25 .. +85 °C						
Operating temperature range [2]					-40 .. +85 °C / -25 .. +85 °C						
Storage temperature range					-40 .. +100 °C						
Fluid temperature range [2]					-40 .. +100 °C / -25 .. +100 °C						
CE mark					EN 61000-6-1 / 2 / 3 / 4						
Vibration resistance acc. to DIN EN 60068-2-6 at 5 .. 500 Hz					≤ 20 g						
Protection class acc. to DIN EN 60529 [3]					IP 67						
Other data											
Supply voltage					10 .. 32 V DC						
Residual ripple of supply voltage					≤ 5 %						
Life expectancy [4]					> 10 million cycles, 0 .. 100 % FS						
Weight					~ 150 g						

Note: Reverse polarity protection of the supply voltage, excess voltage, override and short circuit protection are provided.
FS (**F**ull **S**cale) = relative to complete measuring range
B.F.S.L. = **B**est **F**it **S**traight **L**ine

[1] Measuring ranges: approval for Lloyds Register on request, 1000 bar and above only with connection G 1/2 B DIN EN 837
[2] -25 °C with FKM seal, -40 °C on request
[3] With mounted mating connector in corresponding protection class
[4] Measuring ranges ≥ 1000 bar: > 1 million cycles (0 .. 100 % FS)

Dimensions:

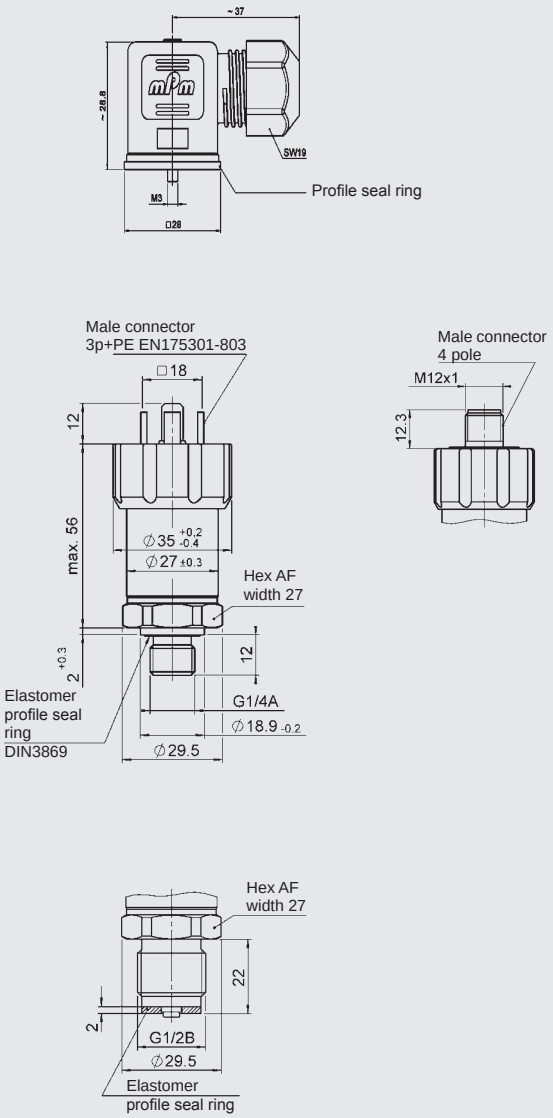

Model code:

HDA 4 7 X X – A – XXXX – S00

Mechanical connection
1 = G1/2 B DIN EN 837
4 = G1/4 A ISO 1179-2

Electrical connection
5 = male, EN175301-803, 3 pole + PE
(IP 67 mating connector supplied)
6 = male M12x1, 4 pole
(mating connector not supplied)

Output signal
A = 4 .. 20 mA, 2-conductor

Measuring ranges in bar
0006; 0016; 0040; 0060; 0100; 0250; 0400; 0600
1000; 1600 bar (only with mech. connection code "1")

Modification number
S00 = with approvals for shipping

Accessories:
Appropriate accessories, such as mating connectors, can be found in the Accessories brochure.

Pin connections:

EN175301-803

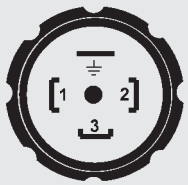

Pin	HDA 47X5-A
1	Signal +
2	Signal -
3	n.c.
⊥	Housing

M12x1

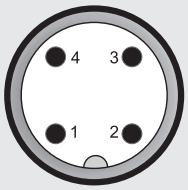

Pin	HDA 47X6-A
1	Signal +
2	n.c.
3	Signal -
4	n.c.

Note:

The information in this brochure relates to the operating conditions and applications described.

For applications or operating conditions not described, please contact the relevant technical department.

Subject to technical modifications.

HYDAC ELECTRONIC GMBH
Hauptstr. 27, 66128 Saarbrücken
Germany
Telephone +49 (0)6897 509-01
Fax +49 (0)6897 509-1726
e-mail: electronic@hydac.com
Internet: www.hydac.com

Pressure Transmitter HDA 4100 shipping applications

Absolute pressure | **Accuracy 0.5 %**

Description:

This pressure transmitter has been specially developed for shipbuilding applications and is based on the HDA 4000 series.

The HDA 4100 has a ceramic measurement cell with thick-layer strain gauge for measuring absolute pressure in the low pressure range.

The evaluation electronics converts the measured pressure into a proportional analogue signal of 4 .. 20 mA.

The electronic module is completely potted to protect it against humidity, vibrations and shock, and is enclosed in a solid stainless steel housing.

For use in the shipping industry, these pressure transmitters have been approved by the following organisations.

Approvals:

- American Bureau of Shipping
- Lloyds Register of Ships
- Det Norske Veritas/ Germanischer Lloyd
- Bureau Veritas

Other approvals on request

Technical data:

Input data			
Measuring ranges	bar	1	2.5
Overload pressures	bar	3	8
Burst pressure	bar	5	12
Mechanical connection	G1/4 A ISO 1179-2		
Tightening torque, recommended	20 Nm		
Parts in contact with fluid	Mech. connection: Stainless steel Sensor cell: Ceramic Seal: FKM/EPDM (as per model code)		
Output data			
Output signal, permitted load resistance	4 .. 20 mA, 2-conductor $R_{Lmax} = (U_B - 10\ V) / 20\ mA\ [k\Omega]$		
Accuracy acc. to DIN 16086, terminal based	≤ ± 0.5 % FS typ. ≤ ± 1 % FS max.		
Accuracy, B.F.S.L.	≤ ± 0.25 % FS typ. ≤ ± 0.5 % FS max.		
Temperature compensation Zero point	≤ ± 0.02 % FS / °C typ. ≤ ± 0.03 % FS / °C max.		
Temperature compensation Span	≤ ± 0.02 % FS / °C typ. ≤ ± 0.03 % FS / °C max.		
Non-linearity acc. to DIN 16086, terminal based	≤ ± 0.5 % FS max.		
Hysteresis	≤ ± 0.4 % FS max.		
Repeatability	≤ ± 0.1 % FS		
Rise time	≤ 1 ms		
Long-term drift	≤ ± 0.3 % FS typ. / year		
Environmental conditions			
Compensated temperature range	-25 .. +85 °C		
Operating temperature range [1]	-30 .. +85 °C / -25 .. +85 °C		
Storage temperature range	-30 .. +100 °C		
Fluid temperature range [1]	-30 .. +85 °C / -25 .. +85 °C		
CE mark	EN 61000-6-1 / 2 / 3 / 4		
Vibration resistance acc.to DIN EN 60068-2-6 at 5 .. 500 Hz	≤ 20 g		
Protection class acc. to DIN EN 60529 [2]	IP 67		
Other data			
Supply voltage	10 .. 32 V DC		
Residual ripple of supply voltage	≤ 5 %		
Life expectancy	> 10 million cycles, 0 .. 100 % FS		
Weight	~ 150 g		

Note: Reverse polarity protection of the supply voltage, excess voltage, override and short circuit protection are provided.
FS (**F**ull **S**cale) = relative to complete measuring range
B.F.S.L. = **B**est **F**it **S**traight **L**ine

[1] -25 °C with FKM or EPDM seal, -30 °C on request
[2] With mounted mating connector in corresponding protection class

Dimensions:

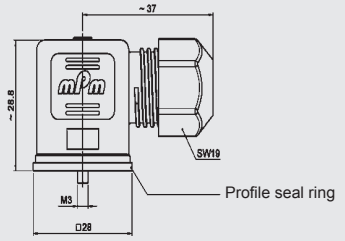

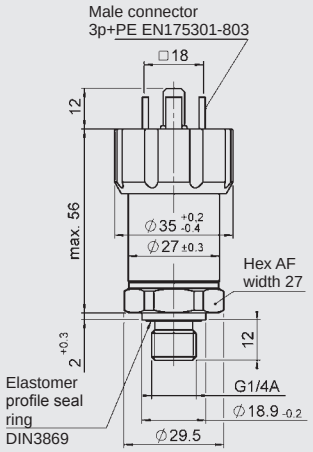

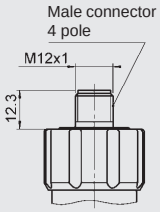

Pin connections:

EN175301-803

Pin	HDA 4145-A
1	Signal +
2	Signal -
3	n.c.
⊥	Housing

M12x1

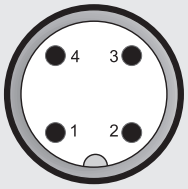

Pin	HDA 4146-A
1	Signal +
2	n.c.
3	Signal -
4	n.c.

Model code:

HDA 4 1 4 X – A – XXXX – S00 – X 1

Mechanical connection
4 = G1/4 A ISO 1179-2

Electrical connection
5 = male, EN175301-803, 3 pole + PE
(IP 67 mating connector supplied)
6 = male M12x1, 4 pole
(mating connector not supplied)

Output signal
A = 4 .. 20 mA, 2-conductor

Measuring ranges in bar
01.0; 02.5

Modification number
S00 = with approvals for shipping

Sealing material (in contact with fluid)
F = FKM seal (e.g. for hydraulic oils)
E = EPDM seal (e.g. for refrigerants)

Connection material (in contact with fluid)
1 = stainless steel

Accessories:
Appropriate accessories, such as mating connectors, can be found in the Accessories brochure.

Note:

The information in this brochure relates to the operating conditions and applications described.

For applications or operating conditions not described, please contact the relevant technical department.

Subject to technical modifications.

HYDAC ELECTRONIC GMBH
Hauptstr. 27, 66128 Saarbrücken
Germany
Telephone +49 (0)6897 509-01
Fax +49 (0)6897 509-1726
e-mail: electronic@hydac.com
Internet: www.hydac.com

PRESSURE SWITCHES [2]

						Page
GENERAL APPLICATIONS						
Relative pressure						
EDS 1700	Display					151
EDS 300	Display					153
EDS 3300	Display					157
EDS 3400	Display					161
EDS 410					OEM	165
EDS 710					OEM	167
EDS 810					OEM	169
EDS 8000	Display					171
EDS 3300	Display	Flush membrane				173
EDS 3400	Display	Flush membrane				177
EDS 4300						181
EDS 4400						183
EDS 3300	Display		IO-Link			185
EDS 3400	Display		IO-Link			187
EDS 820	Display		IO-Link			189
Absolute pressure						
EDS 3100	Display					191
EDS 3100	Display		IO-Link			195
POTENTIALLY EXPLOSIVE ATMOSPHERE						
Relative pressure						
EDS 4400			Flameproof enclosure	ATEX, IECEx, CSA		197
EDS 4400			Flameproof enclosure	ATEX, IECEx, CSA	OEM	201
EDS 4300			Intrinsically safe	ATEX		203
EDS 4300			Intrinsically safe	ATEX	OEM	207
EDS 4400			Intrinsically safe	ATEX		209
EDS 4400			Intrinsically safe	ATEX	OEM	213
Absolute pressure						
EDS 4100			Intrinsically safe	ATEX		215
EDS 4100			Intrinsically safe	ATEX	OEM	219
SHIP						
Relative pressure						
EDS 300	Display					221

Pressure Switch EDS 1700

Relative pressure | **Display**

4 switching outputs
Analogue output

Description:

With its integrated pressure measurement cell, four-digit display and four switching outputs, the EDS 1700 offers the user all the advantages of a modern electronic pressure switch.
Four switch points and switch-back points can be adjusted very simply and independently of one another using the key pad.

For optimum integration in monitoring systems (e.g. with PLC), an analogue output (4 .. 20 mA or 0 .. 10 V) is also available.

The main fields of application of the EDS 1700 are in hydraulics and pneumatics. The instrument is ideal for use where frequent switching cycles (several million), stable switch point accuracy or simple and precise adjustability are required.

Technical data:

Input data							
Measuring ranges	bar	16	40	100	250	400	600
Overload pressures	bar	32	80	200	500	800	1000
Burst pressure	bar	200	200	500	1000	2000	2000
Mechanical connection				Threaded port G1/4 DIN 3852			
Tightening torque, recommended				20 Nm			
Parts in contact with fluid				Mech. connection: Stainless steel			
Output data							
Switching outputs				4 relay outputs with change-over contacts (2 groups, common supply of each group connected) Switching current: 0.01 .. 2 A per switching output Switching voltage: 0.1 .. 250 V AC, 12 .. 32 V DC Switching capacity: 500 VA, 64 W (for inductive load, use varistors) Switching cycles (ohmic resistance): ≥ 20 million minimum load ≥ 400000 maximum load (typ.)			
Analogue output, permitted load resistance				Selectable: 4 .. 20 mA load resist. max. 400 Ω 0 .. 10 V load resist. min. 2 kΩ			
Accuracy acc. to DIN 16086, terminal based				EDS 1700-P: ≤ ± 0.5 % FS max. EDS 1700-N: ≤ ± 1 % FS max.			
Temperature compensation, zero point EDS 1700-P EDS 1700-N				 ≤ ± 0.01 % FS / °C typ. / ≤ ± 0.02 % FS / °C max. ≤ ± 0.02 % FS / °C typ. / ≤ ± 0.03 % FS / °C max.			
Temperature compensation, span EDS 1700-P EDS 1700-N				 ≤ ± 0.01 % FS / °C typ. / ≤ ± 0.02 % FS / °C max. ≤ ± 0.02 % FS / °C typ. / ≤ ± 0.03 % FS / °C max.			
Repeatability				EDS 1700-P: ≤ ± 0.25 % FS max. EDS 1700-N: ≤ ± 0.5 % FS max.			
Reaction time				approx. 20 ms			
Long-term drift				≤ 0.3 % FS typ. / year			
Environmental conditions							
Compensated temperature range				-10 .. +70 °C			
Operating temperature range				-25 .. +60 °C			
Storage temperature range				-40 .. +80 °C			
Fluid temperature range				-25 .. +80 °C			
CE mark				EN 61000-6-1 / 2 / 3 / 4			
Vibration resistance acc. to DIN EN 60068-2-6 (0 .. 500 Hz)				≤ 5 g			
Shock resistance acc. to DIN EN 60068-2-27 (1 ms)				≤ 10 g			
Protection class acc. to DIN EN 60529				IP 65			
Other data							
Electrical connection				Plug-in terminal block, 14 pole			
Supply voltage				22 .. 32 V DC			
Residual ripple of supply voltage				≤ 10 %			
Current consumption				approx. 200 mA			
Display				4-digit, LED, 7 segment, red, height of digits 13 mm			
Weight				~ 800 g			

Note: Reverse polarity protection of the supply voltage, overvoltage, override and short circuit protection are provided.
FS (**F**ull **S**cale) = relative to complete measuring range

Setting options:

The core of the unit is a microprocessor which provides many useful extra functions in addition to normal pressure switch operation. It is possible, for example, to activate switching delay times to prevent fast pressure peaks from triggering an unwanted reversal process. All settings are made using the key pad.

Setting ranges of the switch points:

- Switch point, relay 1 to 4:
  1.5 % .. 100 % FS
- Switch-back point, relay 1 to 4:
  1 % .. 99 % FS
  or alternatively switch-back hysteresis 1 to 4:
  1 % .. 99 % FS

Note:
FS (**F**ull **S**cale) = relative to complete measuring range

Additional setting options:

- Switching direction of relays 1 to 4 (N/C or N/O function)
- Switch-on delay, relays 1 to 4 in the range 0.00 .. 90 seconds
- Switch-off delay relays 1 to 4 in the range 0.00 .. 90 seconds
- Switch-back mode (alternatively switch-back point or switch-back hysteresis)
- Display of the actual pressure, a switch point or the peak value
- Display filter (slow / medium / fast)
- Display range individually selectable (bar, psi, user-selectable)
- Display of the measurement unit (bar, psi)
- Analogue output (4 .. 20 mA or 0 .. 10 V)
- Programming lock

Terminal assignment:

Pin	
1	$+U_B$
2	0 V
3	Analogue output Signal +
4	Analogue output Signal - (0 V)
5	Relay 1 N/C
6	Relay 1 N/O
7	Centre relay 1 and 2
8	Relay 2 N/C
9	Relay 2 N/O
10	Relay 3 N/C
11	Relay 3 N/O
12	Centre relay 3 and 4
13	Relay 4 N/C
14	Relay 4 N/O

Dimensions:

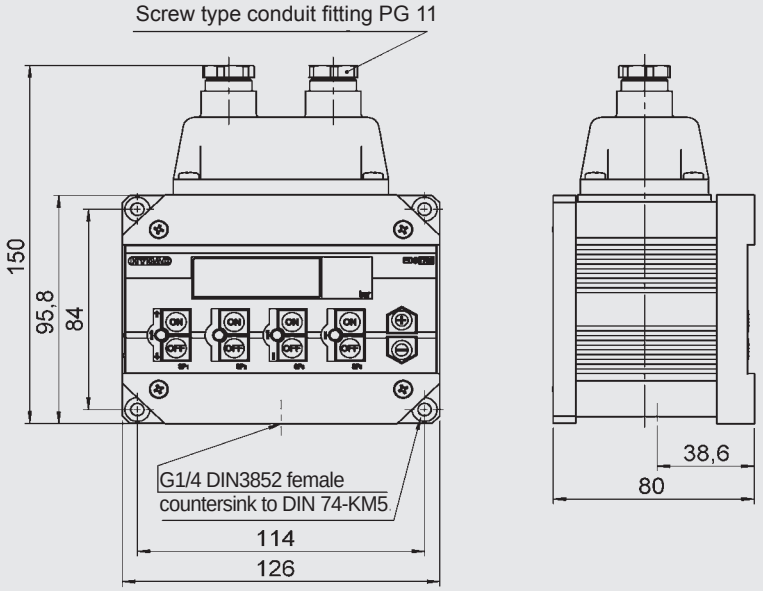

Model code:

EDS 1 7 9 X – X – XXX – 000

Mechanical connection
9 = threaded port G1/4 DIN 3852

Display
1 = 4-digit bar
2 = 4-digit psi

Accuracy
P = 0.5 %
N = 1 %

Measuring ranges in bar
016; 040; 100; 250; 400; 600

Modification number
000 = standard

Accessories available (not supplied with instrument)
Vibration mounts Part no.: 257492

More detailed information on accessories can be found in the Accessories brochure.

Note:

The information in this brochure relates to the operating conditions and applications described.

For applications or operating conditions not described, please contact the relevant technical department.

Subject to technical modifications.

HYDAC ELECTRONIC GMBH
Hauptstraße 27, 66128 Saarbrücken
Germany
Telephone +49 (0)6897 509-01
Fax +49 (0)6897 509-1726
E-mail: electronic@hydac.com
Internet: www.hydac.com

Pressure Switch EDS 300

Relative pressure | **Display**

Up to 2 switching outputs
Analogue output

Description:

The EDS 300 is a compact, electronic pressure switch with integrated digital display. The integrated pressure sensor is based on a measurement cell with thin-film strain gauge on a stainless steel membrane.
Four different output models are available: with one switch point or with two switch points and both models can also have an additional analogue output signal 4 .. 20 mA.

The switch points and the associated hystereses can be adjusted using the key pad. For optimum adaptation to a particular application, the instrument has many additional adjustment parameters, e.g. switching delay times, N/O / N/C function of the outputs.

The main applications of the EDS 300 are to indicate pressures and limits in hydraulics and pneumatics and anywhere where high switching frequency or constant switching accuracy would overburden a mechanical pressure switch.

Technical data:

Input data							
Measuring ranges	bar	16	40	100	250	400	600
Overload pressures	bar	32	80	200	500	800	1000
Burst pressure	bar	200	200	500	1000	2000	2000
Mechanical connection				G1/4 A ISO 1179-2			
Tightening torque, recommended				20 Nm			
Parts in contact with fluid				Mech. connection: Stainless steel Seal: FKM			
Output data							
Switching outputs				1 or 2 PNP transistor outputs Switching current: max. 1.2 A per switching output Switching cycles: > 100 million			
Analogue output, permitted load resistance				4 .. 20 mA load resist. max. 400 Ω			
Accuracy acc. to DIN 16086, terminal based				≤ ± 0.5 % FS typ. ≤ ± 1 % FS max.			
Temperature compensation, zero point				≤ ± 0.02 % FS / °C typ. ≤ ± 0.03 % FS / °C max.			
Temperature compensation, span				≤ ± 0.02 % FS / °C typ. ≤ ± 0.03 % FS / °C max.			
Repeatability				≤ ± 0.5 % FS max.			
Reaction time				approx. 10 ms			
Long-term drift				≤ ± 0.3 % FS typ. / year			
Environmental conditions							
Compensated temperature range				-10 .. +70 °C			
Operating temperature range				-25 .. +80 °C			
Storage temperature range				-40 .. +80 °C			
Fluid temperature range				-25 .. +80 °C			
CE mark				EN 61000-6-1 / 2 / 3 / 4			
Vibration resistance acc. to DIN EN 60068-2-6 at 10 .. 500 Hz				≤ 10 g			
Shock resistance acc. to DIN EN 60068-2-27 (11 ms)				≤ 50 g			
Protection class acc. to DIN EN 60529 [1]				IP 65			
Other data							
Supply voltage				20 .. 32 V DC			
Residual ripple of supply voltage				≤ 5 %			
Current consumption				approx. 100 mA (inactive switching output)			
Display				3-digit, LED, 7 segment, red, height of digits 9.2 mm			
Weight				~ 300 g			

Note: Reverse polarity protection of the supply voltage, overvoltage, override and short circuit protection are provided.
FS (**F**ull **S**cale) = relative to complete measuring range

[1] With mounted mating connector in corresponding protection class

Setting options:

All settings available on the EDS 300 are grouped in 2 easy-to-navigate menus.
In order to prevent unauthorised adjustment of the device, a programming lock can be set.

Setting ranges for the switching outputs:

Switch point function

Meas. range in bar	Switch point in bar	Hysteresis in bar	Increment* in bar
0 .. 16	0.3 .. 16	0.1 .. 15.8	0.1
0 .. 40	0.6 .. 40	0.2 .. 39.6	0.2
0 .. 100	1.5 .. 100	0.5 .. 99.0	0.5
0 .. 250	3.0 .. 250	1.0 .. 248	1.0
0 .. 400	6.0 .. 400	2.0 .. 396	2.0
0 .. 600	15.0 .. 600	5.0 .. 590	5.0

Window function

Meas. range in bar	Lower switch value in bar	Upper switch value in bar	Increment* in bar
0 .. 16	0.2 .. 15.9	0.3 .. 16	0.1
0 .. 40	0.4 .. 39.8	0.6 .. 40	0.2
0 .. 100	1.0 .. 99.5	1.5 .. 100	0.5
0 .. 250	2.0 .. 249.0	3.0 .. 250	1.0
0 .. 400	4.0 .. 398.0	6.0 .. 400	2.0
0 .. 600	10.0 .. 595.0	15.0 .. 600	5.0

* All ranges given in the table can be adjusted by the increments shown.

Additional functions:

- Switching mode of the switching outputs adjustable (switch point function or window function)
- Switching direction of the switching outputs adjustable (N/C or N/O function)
- Switch-on and switch-off delay adjustable from 0.0 .. 75.0 seconds
- Choice of display (actual pressure, peak value, switch point 1, switch point 2, display off)
- Optional analogue output signal 4 .. 20 mA
- Subsequent correction of zero point in the range ± 3 % FS possible

Pin connections:

Binder series 714 M18

Pin	EDS 344-2	EDS 344-3
1	$+U_B$	$+U_B$
2	0 V	0 V
3	SP1	SP1
4	SP2	Analogue

EN175301-803

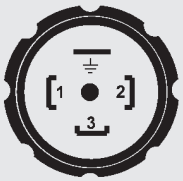

Pin	EDS 345-1
1	$+U_B$
2	0 V
3	SP1
⊥	Housing

M12x1, 4 pole

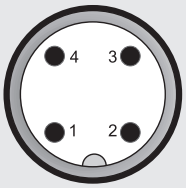

Pin	EDS 346-1	EDS 346-2	EDS 346-3
1	$+U_B$	$+U_B$	$+U_B$
2	n.c.	SP2	Analogue
3	0 V	0 V	0 V
4	SP1	SP1	SP1

M12x1, 5 pole

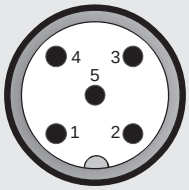

Pin	EDS 348-5
1	$+U_B$
2	Analogue
3	0 V
4	SP1
5	SP2

Dimensions:

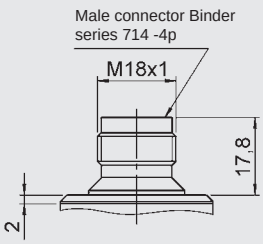
Male connector Binder
series 714 -4p
M18x1
17.8
2

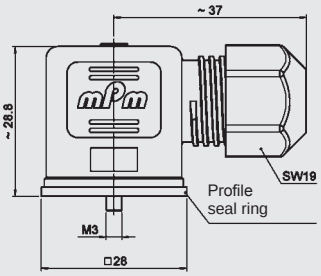
~ 37
~ 28.8
SW19
Profile
seal ring
M3
□28

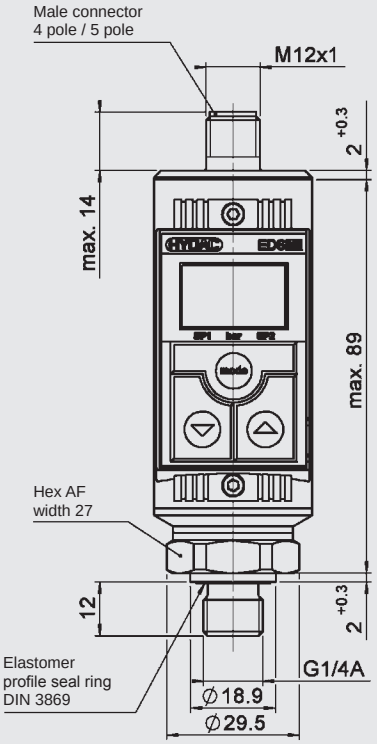
Male connector
4 pole / 5 pole
M12x1
2 +0.3
max. 14
max. 89
Hex AF
width 27
12
2 +0.3
Elastomer
profile seal ring
DIN 3869
G1/4A
∅18.9
∅29.5

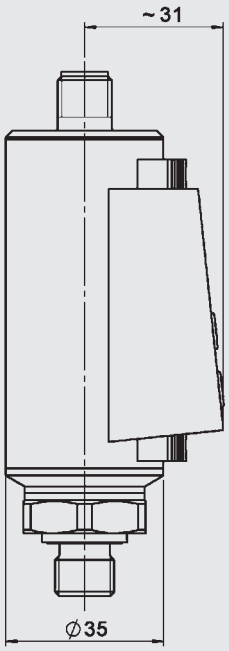
~ 31
∅35

Model code:

EDS 3 4 X – X – XXX – 000

Mechanical connection
4 = G1/4 A ISO 1179-2

Electrical connection
4 = male, Binder series 714 M18, 4 pole
only possible on output models "2" and "3"
(mating connector not supplied)
5 = male, EN175301-803, 3 pole + PE
only possible on output model "1"
(mating connector supplied)
6 = male M12x1, 4 pole
only possible on output models "1", "2" and "3"
(mating connector not supplied)
8 = male M12x1, 5 pole
only possible on output model "5"
(mating connector not supplied)

Output
1 = 1 switching output
only in conjunction with electrical connection type "5" or "6"
2 = 2 switching outputs
only in conjunction with electrical connection type "4" or "6"
3 = 1 switching output and 1 analogue output
only in conjunction with electrical connection type "4" or "6"
5 = 2 switching outputs and 1 analogue output
only in conjunction with electrical connection type "8"

Measuring ranges in bar
016; 040; 100; 250; 400; 600

Modification number
000 = standard

Accessories:
Appropriate accessories, such as mating connectors, mechanical adapters, splash guards and clamps for wall-mounting etc, can be found in the Accessories brochure.

Note:

The information in this brochure relates to the operating conditions and applications described.

For applications or operating conditions not described, please contact the relevant technical department.

Subject to technical modifications.

HYDAC ELECTRONIC GMBH
Hauptstraße 27, 66128 Saarbrücken
Germany
Telephone +49 (0)6897 509-01
Fax +49 (0)6897 509-1726
E-mail: electronic@hydac.com
Internet: www.hydac.com

Pressure Switch EDS 3300

Relative pressure | **Display**

Up to 2 switching outputs
Analogue output

Description:

The EDS 3300 is a compact electronic pressure switch with integrated digital display for relative pressure measurement in the low pressure range.

It has a ceramic measurement cell with thick-layer strain gauge. Depending on the particular version, the instrument can have one or two switching outputs, and there is the option of an additional switchable analogue output signal (4 .. 20 mA or 0 .. 10 V).

A special design feature of the EDS 3300 is that the display can be moved in two planes. The device can be installed in almost any mounting position and the display can be turned to the optimum position without the usual additional expense of a mechanical adapter.

The 4-digit display can indicate the pressure in bar, psi or MPa. The user can select the particular measurement unit. When changing to a different measurement unit, the device automatically converts all the switching settings to the new unit of measurement.

The EDS 3300 is also available in a variant with menu navigation in accordance with VDMA.

The main applications of the EDS 3300 are primarily in low-pressure ranges in hydraulics and pneumatics, as well as in refrigeration and air conditioning technology.

Technical data:

Input data							
Measuring ranges	bar	-1..1	1	2.5	6	10	16
Overload pressures	bar	3	3	8	18	30	48
Burst pressure	bar	5	5	12	30	50	80
Mechanical connection		See model code					
Tightening torque, recommended		20 Nm (G1/4); 45 Nm (G1/2)					
Parts in contact with fluid		Mech. connection: Stainless steel Sensor cell: Ceramic Seal: Copper (G1/2) / FKM / EPDM (as per model code)					
Output data							
Switching outputs		1 or 2 PNP transistor outputs Switching current: max. 1.2 A per output Switching cycles: > 100 million					
Analogue output, permitted load resistance		Selectable: 4 .. 20 mA load resist. max. 500 Ω 0 .. 10 V load resist. min. 1 kΩ					
Accuracy acc. to DIN 16086, terminal based		≤ ± 0.5 % FS typ. ≤ ± 1 % FS max.					
Temperature compensation, zero point		≤ ± 0.015 % FS / °C typ. ≤ ± 0.025 % FS / °C max.					
Temperature compensation, span		≤ ± 0.015 % FS / °C typ. ≤ ± 0.025 % FS / °C max.					
Repeatability		≤ ± 0.25 % FS max.					
Reaction time		< 10 ms					
Long-term drift		≤ ± 0.3 % FS typ. / year					
Environmental conditions							
Compensated temperature range		-10 .. +70 °C					
Operating temperature range		-25 .. +80 °C (-25 .. +60 °C for UL spec.)					
Storage temperature range		-40 .. +80 °C					
Fluid temperature range		-25 .. +80 °C					
CE mark		EN 61000-6-1 / 2 / 3 / 4					
cULus mark[1]		Certificate no.: E318391					
Vibration resistance acc. to DIN EN 60068-2-6 at 10 .. 500 Hz		≤ 10 g					
Shock resistance acc. to DIN EN 60068-2-27 (11 ms)		≤ 50 g					
Protection class acc. to DIN EN 60529[2]		IP 67					
Other data							
Supply voltage when applied acc. to UL specifications		9 .. 35 V DC without analogue output 18 .. 35 V DC with analogue output – limited energy – acc. to 9.3 UL 61010; Class 2; UL 1310/1585; LPS UL 60950					
Residual ripple of supply voltage		≤ 5 %					
Current consumption		max. 2.455 A total max. 35 mA with inactive switching output max. 55 mA with inactive switching output and analogue output					
Display		4-digit, LED, 7-segment, red, height of digits 7 mm					
Weight		~ 120 g					

Note: Overvoltage, override, short circuit protection are provided
FS (**F**ull **S**cale) = relative to complete measuring range

[1] Environmental conditions acc. to 1.4.2 UL 61010-1; C22.2 No 61010-1
[2] With mounted mating connector in corresponding protection class

Setting options standard design:

All settings offered by the EDS 3300 are grouped in 2 easy-to-navigate menus.
In order to prevent unauthorised adjustment of the device, a programming lock can be set.

Setting ranges for the switching outputs:

Switch point function

Meas. range in bar	Switch point in bar	Hysteresis in bar	Incre-ment* in bar
-1 .. 1	-0.97 .. 1	-0.99 .. 0.98	0.01
0 .. 1	0.016 .. 1	0.006 .. 0.99	0.002
0 .. 2.5	0.04 .. 2.5	0.015 .. 2.475	0.005
0 .. 6	0.09 .. 6	0.3 .. 5.94	0.01
0 .. 10	0.16 .. 10	0.06 .. 9.9	0.02
0 .. 16	0.25 .. 16	0.1 .. 15.8	0.05

Window function

Meas. range in bar	Lower switch value in bar	Upper switch value in bar	Incre-ment* in bar
-1 .. 1	-0.97 .. 0.96	-0.95 .. 0.98	0.01
0 .. 1	0.016 .. 0.982	0.024 .. 0.99	0.002
0 .. 2.5	0.04 .. 2.455	0.06 .. 2.475	0.005
0 .. 6	0.09 .. 5.89	0.14 .. 5.94	0.01
0 .. 10	0.16 .. 9.82	0.24 .. 9.9	0.02
0 .. 16	0.25 .. 15.7	0.4 .. 15.8	0.05

* All ranges given in the table can be adjusted by the increments shown.

Setting options menu navigation acc. to VDMA:

All terms and symbols used for setting the EDS 3300 as well as the menu structure comply with the specifications in the VDMA Standard (VDMA 24574-1) for pressure switches.

The EDS 3300 can easily be adjusted via three buttons.

Setting ranges for the switching outputs:

Measuring range in bar	Lower limit of RP / FL in bar	Upper limit of SP / FH in bar
-1 .. 1	-0.98	1.00
0 .. 1	0.010	1.000
0 .. 2.5	0.025	2.500
0 .. 6	0.06	6.00
0 .. 10	0.10	10.00
0 .. 16	0.20	16.00

Measuring range in bar	Min. difference betw. RP and SP & FL and FH	Incre-ment* in bar
-1 .. 1	0.02	0.01
0 .. 1	0.010	0.002
0 .. 2.5	0.025	0.005
0 .. 6	0.06	0.01
0 .. 10	0.10	0.02
0 .. 16	0.20	0.05

* All ranges given in the table can be adjusted by the increments shown.

SP = switch point
RP = switch-back point
FL = pressure window lower value
FH = pressure window upper value

Additional functions:

- Switching mode of the switching outputs adjustable (switch point function or window function)
- Switching direction of the switching outputs adjustable (N/C or N/O function)
- Switch-on and switch-off delay adjustable from 0.00 .. 99.99 seconds
- Analogue output signal selectable 4 .. 20 mA or 0 .. 10 V
- Pressure can be displayed in measurement units bar, psi, MPa. The scaling can also be adapted to indicate force, weight, etc.

Additionally in the standard design:

- Choice of display (actual pressure, peak value, switch point 1, switch point 2, display off)
- Display filter for smoothing the display value during pressure pulsations

Pin connections:

M12x1, 4 pole

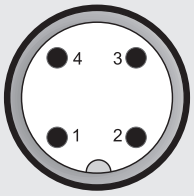

Pin	EDS 33X6-1	EDS 33X6-2	EDS 33X6-3
1	$+U_B$	$+U_B$	$+U_B$
2	n.c.	SP2	Analogue
3	0 V	0 V	0 V
4	SP1	SP1	SP1

M12x1, 5 pole

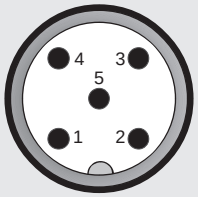

Pin	EDS 33X8-5
1	$+U_B$
2	Analogue
3	0 V
4	SP1
5	SP2

Dimensions:

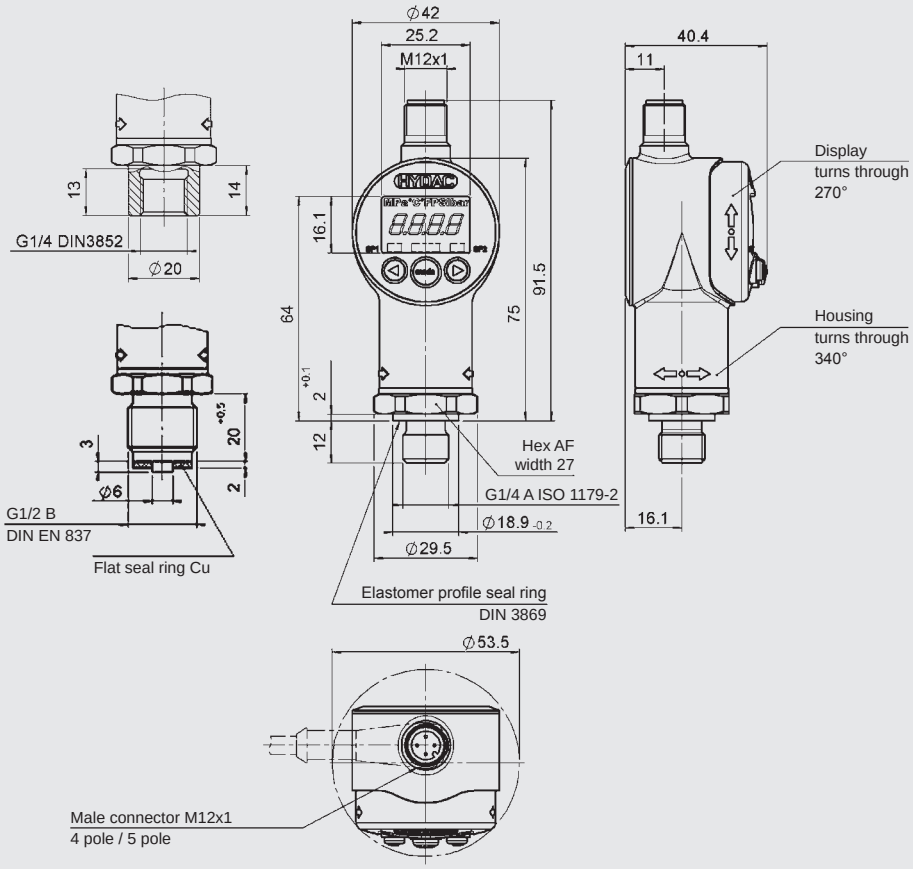

Model code:

EDS 3 3 X X – X – XXXX – X00 – X 1

Mechanical connection
1 = G1/2 B DIN-EN 837
only for modification "000"
4 = G1/4 A ISO 1179-2
9 = threaded port DIN 3852-G1/4

Electrical connection
6 = male M12x1, 4 pole
only possible on output models "1", "2" and "3"
8 = male M12x1, 5 pole
only possible on output model "5" and modification "000"

Output
1 = 1 switching output
only in conjunction with electrical connection type "6"
2 = 2 switching outputs
only in conjunction with electrical connection type "6"
3 = 1 switching output and 1 analogue output
only in conjunction with electrical connection type "6"
5 = 2 switching outputs and 1 analogue output
only in conjunction with electrical connection type "8"
and modification "000"

Measuring ranges in bar
0001 (-1 .. 1); 01.0; 02.5; 06.0; 0010; 0016

Modification number
000 = standard
V00 = menu navigation acc. to VDMA (standard sheet 24574)

Seal material (in contact with fluid)
F = FKM seal (e.g. for hydraulic oils)
E = EPDM seal (e.g. for water, refrigerants)

Connection material (in contact with fluid)
1 = stainless steel

Accessories:
Appropriate accessories, such as mating connectors, can be found in the Accessories brochure.

Note:

The information in this brochure relates to the operating conditions and applications described.

For applications or operating conditions not described, please contact the relevant technical department.

Subject to technical modifications.

HYDAC ELECTRONIC GMBH
Hauptstraße 27, 66128 Saarbrücken
Germany
Telephone +49 (0)6897 509-01
Fax +49 (0)6897 509-1726
E-mail: electronic@hydac.com
Internet: www.hydac.com

Pressure Switch EDS 3400

Relative pressure | **Display**

Up to 2 switching outputs
Analogue output

Description:

The EDS 3400 is a compact electronic pressure switch with integrated digital display for relative pressure measurement in the high pressure range.

The instrument has a measurement cell with thin-film strain gauge on a stainless steel membrane. Depending on the particular version, the instrument can have one or two switching outputs, and there is the option of an additional switchable analogue output signal (4 .. 20 mA or 0 .. 10 V).

A special design feature of the EDS 3400 is that the display can be moved in two planes. The device can be installed in almost any mounting position and the display can be turned to the optimum position without the usual additional expense of a mechanical adapter.

The 4-digit display can indicate the pressure in bar, psi or MPa. The user can select the particular measurement unit. When changing to a different measurement unit, the device automatically converts all the switching settings to the new unit of measurement.

The EDS 3400 is also available in a variant with menu navigation in accordance with VDMA.

The main applications of the EDS 3400 are primarily in hydraulics and pneumatics, as well as in refrigeration and air conditioning technology.

Technical data:

Input data							
Measuring ranges[1]	bar	40	100	250	400	600	1000
Overload pressures	bar	80	200	500	800	1000	1600
Burst pressure	bar	200	500	1000	2000	2000	3000
Mechanical connection			See model code				
Tightening torque, recommended			20 Nm				
Parts in contact with fluid			Mech. connection: Stainless steel Seal: FKM				
Output data							
Switching outputs			1 or 2 PNP transistor outputs Switching current: max. 1.2 A per output Switching cycles: > 100 million				
Analogue output, permitted load resistance			Selectable: 4 .. 20 mA load resist. max. 500 Ω 0 .. 10 V load resist. min. 1 kΩ				
Accuracy acc. to DIN 16086, terminal based			≤ ± 0.5 % FS typ. ≤ ± 1 % FS max.				
Temperature compensation, zero point			≤ ± 0.015 % FS / °C typ. ≤ ± 0.025 % FS / °C max.				
Temperature compensation, span			≤ ± 0.015 % FS / °C typ. ≤ ± 0.025 % FS / °C max.				
Repeatability			≤ ± 0.25 % FS max.				
Reaction time			< 10 ms				
Long-term drift			≤ ± 0.3 % FS typ. / year				
Environmental conditions							
Compensated temperature range			-10 .. +70 °C				
Operating temperature range			-25 .. +80 °C (-25 .. +60 °C for UL spec.)				
Storage temperature range			-40 .. +80 °C				
Fluid temperature range			-25 .. +80 °C				
CE mark			EN 61000-6-1 / 2 / 3 / 4				
cULus mark[2]			Certificate no.: E318391				
Vibration resistance acc. to DIN EN 60068-2-6 at 10 .. 500 Hz			≤ 10 g				
Shock resistance acc. to DIN EN 60068-2-27 (11 ms)			≤ 50 g				
Protection class acc. to DIN EN 60529[3]			IP 67				
Other data							
Supply voltage			9 .. 35 V DC without analogue output 18 .. 35 V DC with analogue output				
when applied acc. to UL specifications			– limited energy – acc. to 9.3 UL 61010; Class 2; UL 1310/1585; LPS UL 60950				
Residual ripple of supply voltage			≤ 5 %				
Current consumption			max. 2.455 A total max. 35 mA with inactive switching output max. 55 mA with inactive switching output and analogue output				
Display			4-digit, LED, 7 segment, red, height of digits 7 mm				
Weight			~ 120 g				

Note: Overvoltage, override protection and short circuit protection are provided.
FS (**F**ull **S**cale) = relative to complete measuring range

[1] 1000 bar only with mechanical connection G1/4A ISO 1179-2
[2] Environmental conditions acc. to 1.4.2 UL 61010-1; C22.2 No. 61010-1
[3] With mounted mating connector in corresponding protection class

Setting options standard design:

All settings offered by the EDS 3400 are grouped in 2 easy-to-navigate menus.
In order to prevent unauthorised adjustment of the device, a programming lock can be set.

Setting ranges for the switching outputs:

Switch point function

Meas. range in bar	Switch point in bar	Hysteresis in bar	Incre-ment* in bar
0 .. 40	0.6 .. 40	0.2 .. 39.6	0.1
0 ..100	1.6 .. 100	0.6 .. 99.0	0.2
0 .. 250	4.0 .. 250	1.5 .. 247.5	0.5
0 .. 400	6.0 .. 400	2.0 .. 396	1
0 .. 600	9.0 .. 600	3.0 .. 594	1
0 .. 1000	16 .. 1000	6 .. 990	2

Window function

Meas. range in bar	Lower switch value in bar	Upper switch value in bar	Incre-ment* in bar
0 .. 40	0.6 .. 39.2	0.9 .. 39.6	0.1
0 .. 100	1.6 .. 98.2	2.4 .. 99	0.2
0 .. 250	4.0 .. 245.5	6.0 .. 247.5	0.5
0 .. 400	6.0 .. 392	9.0 .. 396	1
0 .. 600	9.0 .. 589	14 .. 594	1
0 .. 1000	16 .. 982	24 .. 990	2

* All ranges given in the table can be adjusted by the increments shown.

Setting options menu navigation acc. to VDMA:

All terms and symbols used for setting the EDS 3400 as well as the menu structure comply with the specifications in the VDMA Standard (VDMA 24574-1) for pressure switches.

The EDS 3400 can easily be adjusted via three buttons.

Setting ranges for the switching outputs:

Measuring range in bar	Lower limit of RP / FL in bar	Upper limit of SP / FH in bar
0 .. 40	0.4	40.0
0 .. 100	1.0	100.0
0 .. 250	2.5	250.0
0 .. 400	4	400
0 .. 600	6	600
0 .. 1000	10	1000

Measuring range in bar	Min. difference betw. RP and SP & FL and FH	Incre-ment* in bar
0 .. 40	0.4	0.1
0 .. 100	1.0	0.2
0 .. 250	2.5	0.5
0 .. 400	4	1
0 .. 600	6	1
0 .. 1000	10	2

* All ranges given in the table can be adjusted by the increments shown.

SP = switch point
RP = switch-back point
FL = pressure window lower value
FH = pressure window upper value

Additional functions:

- Switching mode of the switching outputs adjustable (switch point function or window function)
- Switching direction of the switching outputs adjustable (N/C or N/O function)
- Switch-on and switch-off delay adjustable from 0.00 .. 99.99 seconds
- Analogue output signal selectable 4 .. 20 mA or 0 .. 10 V
- Pressure can be displayed in measurement units bar, psi, MPa. The scaling can also be adapted to indicate force, weight, ect.

Additionally in the standard design:

- Choice of display (actual pressure, peak value, switch point 1, switch point 2, display off)
- Display filter for smoothing the display value during pressure pulsations

Pin connections:

M12x1, 4 pole

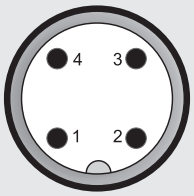

Pin	EDS 34X6-1	EDS 34X6-2	EDS 34X6-3
1	$+U_B$	$+U_B$	$+U_B$
2	n.c.	SP2	Analogue
3	0 V	0 V	0 V
4	SP1	SP1	SP1

M12x1, 5 pole

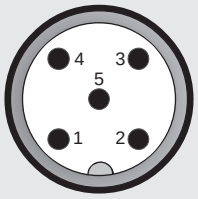

Pin	EDS 34X8-5
1	$+U_B$
2	Analogue
3	0 V
4	SP1
5	SP2

Dimensions:

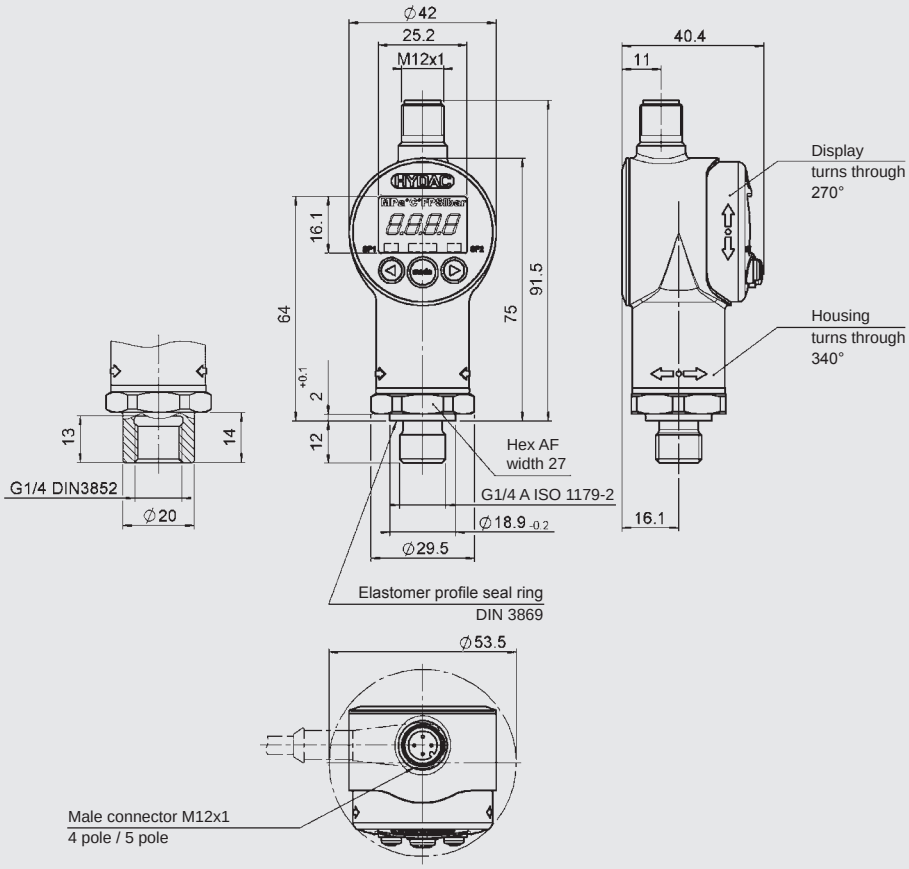

Model code:

EDS 3 4 X X – X – XXXX – 000

Mechanical connection
4 = G1/4 A ISO 1179-2
9 = threaded port DIN 3852-G1/4

Electrical connection
6 = male M12x1, 4 pole
only possible on output models "1", "2" and "3"
8 = male M12x1, 5 pole
only possible on output model "5" and modification "000"

Output
1 = 1 switching output
only in conjunction with electrical connection type "6"
2 = 2 switching outputs
only in conjunction with electrical connection type "6"
3 = 1 switching output and 1 analogue output
only in conjunction with electrical connection type "6"
5 = 2 switching outputs and 1 analogue output
only in conjunction with electrical connection type "8"
and modification "000"

Measuring ranges in bar
0040; 0100; 0250; 0400; 0600
1000 (only with mech. connection code "4")

Modification number
000 = standard
V00 = menu navigation acc. to VDMA (standard sheet 24574)

Accessories:
Appropriate accessories, such as mating connectors, can be found in the Accessories brochure.

Note:

The information in this brochure relates to the operating conditions and applications described.

For applications or operating conditions not described, please contact the relevant technical department.

Subject to technical modifications.

HYDAC ELECTRONIC GMBH
Hauptstraße 27, 66128 Saarbrücken
Germany
Telephone +49 (0)6897 509-01
Fax +49 (0)6897 509-1726
E-mail: electronic@hydac.com
Internet: www.hydac.com

Pressure Switch
EDS 410 for series applications

Relative pressure | **Factory-set**

Customised designs thanks to diverse electrical and mechanical connections
Up to 2 switching outputs

Description:

The electronic pressure switch EDS 410 has been specially developed for use in series applications, and is based on the EDS 4000 pressure switch series.

The EDS 410 is available with one or two transistor outputs (PNP), which can be defined as either N/C or N/O.

The switch and switch-back points of the EDS 410 are factory-set acc. to customer specification (not field-adjustable). As with the EDS 4000 standard model, the EDS 410 has a ceramic measurement cell with thick-layer strain gauge for measuring relative pressure in the low pressure range, and a measurement cell with thin-film strain gauge on a stainless steel membrane for measuring in the high pressure range.

Various pressure ranges between 0 .. 1 bar and 0 .. 600 bar as well as different electrical and mechanical connection types are available.

Technical data:

Input data												
Measuring ranges	bar	1	2.5	6	10	16	40	60	100	250	400	600
Overload pressures	bar	3	8	18	30	48	80	120	200	500	800	1000
Burst pressure	bar	5	12	30	50	80	180	300	500	1250	2000	2000
Mechanical connection[1]						G1/4 A ISO 1179-2						
Tightening torque, recommended						20 Nm						
Parts in contact with fluid						Mech. connection: Stainless steel Sensor cell: Ceramic or stainless steel Seal: FKM or EPDM (as per model code)						
Output data												
Switching outputs						1 or 2 transistor outputs PNP or NPN Switching current: PNP: max. 1.2 A with 1 switching output max. 1 A each with 2 switching outputs NPN: max. 0.5 A with 1 switching output max. 0.3 A each with 2 switching outputs Switching cycles: > 100 million Switch points/switch-back points: acc. to customer specification Switch-on and switch-off delay: 8 .. 2000 ms (standard 32 ms); factory-set acc. to customer specification						
Accuracy acc. to DIN 16086, terminal based						≤ ± 0.5 % FS typ. ≤ ± 1 % FS max.						
Temperature compensation, zero point						≤ ± 0.02 % FS / °C typ. ≤ ± 0.03 % FS / °C max.						
Temperature compensation, span						≤ ± 0.02 % FS / °C typ. ≤ ± 0.03 % FS / °C max.						
Repeatability						≤ 0.1 % FS max.						
Long-term drift						≤ ± 0.3 % FS typ. / year						
Environmental conditions												
Compensated temperature range						-25 .. +85 °C						
Operating temperature range[2]						-40 .. +85 °C / -25 .. +85 °C						
Storage temperature range						-40 .. +100 °C						
Fluid temperature range[2]						-40 .. +100 °C / -25 .. +100 °C						
CE mark						EN 61000-6-1 / 2 / 3 / 4						
Vibration resistance acc. to DIN EN 60068-2-6 at 10 .. 500 Hz						≤ 20 g						
Shock resistance acc. to DIN EN 60068-2-27 (1 ms)						≤ 100 g						
Protection class acc. to DIN EN 60529[3]						IP 65 IP 67						
Other data												
Electrical connection[1]						e.g. EN175301-803 M12x1 (4 pole) jacketed cable						
Supply voltage						8 .. 42 V DC						
Residual ripple of supply voltage						≤ 5 %						
Current consumption						≤ 25 mA with inactive switching outputs ≤ 1.225 A with 1 switching output ≤ 2.425 A with 2 switching outputs						
Weight						~ 145 g						

Note: Reverse polarity protection of the supply voltage, overvoltage, override and short circuit protection are provided.
FS (**F**ull **S**cale) = relative to complete measuring range

[1] Additional connection options available on request
[2] -25 °C with FKM or EPDM seal, -40 °C on request
[3] With mounted mating connector in corresponding protection class

Dimensions:

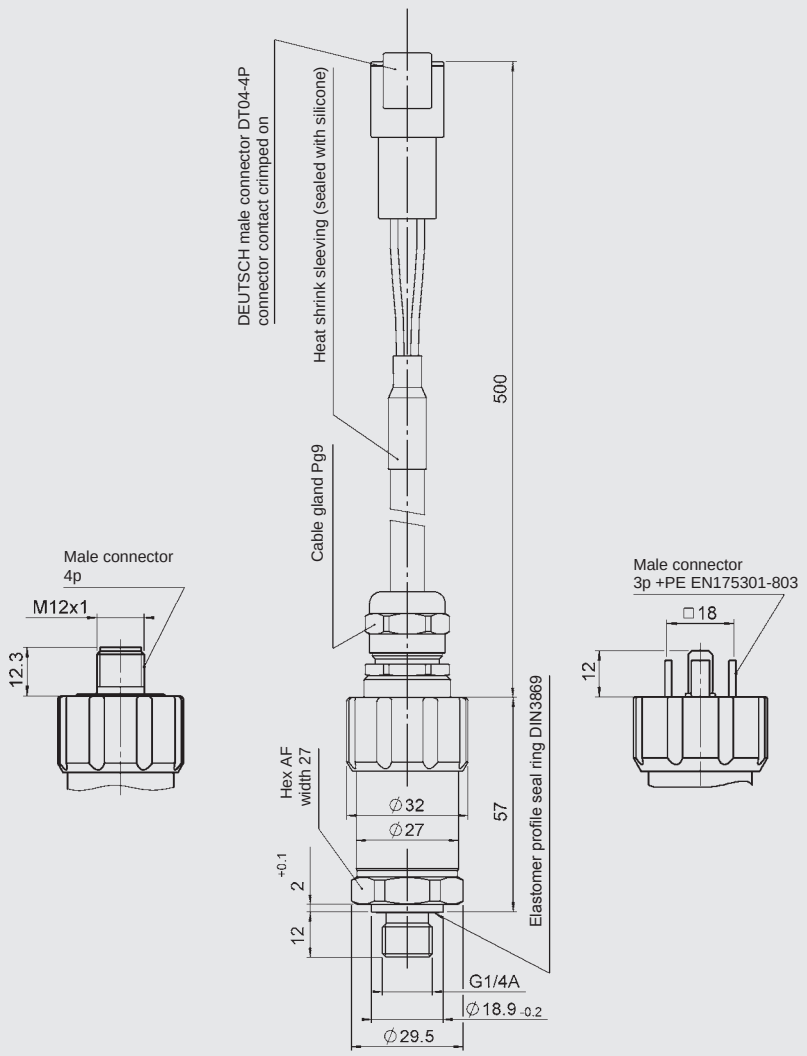

Note:

The information in this brochure relates to the operating conditions and applications described.

For applications or operating conditions not described, please contact the relevant technical department.

Subject to technical modifications.

Order details:

The electronic pressure switch EDS 410 has been specially developed for OEM customers and is available for minimum order quantities of 50 pieces per type.

For precise specifications, please contact the Sales Department of HYDAC ELECTRONIC.

HYDAC ELECTRONIC GMBH
Hauptstr. 27, 66128 Saarbrücken
Germany
Telephone +49 (0)6897 509-01
Fax +49 (0)6897 509-1726
e-mail: electronic@hydac.com
Internet: www.hydac.com

Pressure Switch
EDS 710 for series applications

Relative pressure | **Factory-set**

Customised designs thanks to diverse electrical and mechanical connections
1 switching output

Description:

The electronic pressure switch EDS 710 has been specially developed for use in series applications.

The highly compact unit has a very robust pressure sensor with thin-film strain gauge on a stainless steel membrane.

The EDS 710 is available with 1 transistor output (PNP) which can be defined either as N/C or N/O.
The switch and switch-back point of the EDS 710 each are factory-set acc. to customer specification (not field-adjustable).

Various pressure ranges between 0 .. 16 bar and 0 .. 600 bar are available.

Technical data:

Input data								
Measuring ranges	bar	40	60	100	160	250	400	600
Overload pressures	bar	80	120	200	320	500	800	1000
Burst pressure	bar	200	300	500	800	1250	2000	2000
Mechanical connection		G1/4 A ISO 1179-2						
Tightening torque, recommended		20 Nm						
Parts in contact with fluid[1]		Mech. connection: Stainless steel Seal: FKM						
Output data								
Switching output		1 PNP transistor output Switching current: 400 mA Switching cycles: > 100 million Switch point/switch-back point: acc. to customer specification Switch-on and switch-off delay: 8 .. 2000 ms (standard 32 ms); factory-set acc. to customer specification						
Accuracy acc. to DIN 16086, terminal based		≤ ± 0.5 % FS typ. ≤ ± 1 % FS max.						
Temperature compensation, zero point		≤ ± 0.02 % FS / °C typ. ≤ ± 0.03 % FS / °C max.						
Temperature compensation, span		≤ ± 0.02 % FS / °C typ. ≤ ± 0.03 % FS / °C max.						
Repeatability		≤ 0.1 % FS max.						
Long-term drift		≤ ± 0.3 % FS typ. / year						
Environmental conditions								
Compensated temperature range		-25 .. +85 °C						
Operating temperature range[2]		-40 .. +85 °C / -25 .. +85 °C						
Storage temperature range		-40 .. +100 °C						
Fluid temperature range[2]		-40 .. +100 °C / -25 .. +100 °C						
CE mark		EN 61000-6-1 / 2 / 3 / 4						
Vibration resistance acc. to DIN EN 60068-2-6 at 10 .. 500 Hz		≤ 20 g						
Shock resistance acc. to DIN EN 60068-2-27 (1 ms)		≤ 100 g						
Protection class acc. to DIN EN 60529[3]		IP 67						
Other data								
Electrical connection[4]		e.g. M12x1 (4 pole); jacketed cable						
Supply voltage		8 .. 32 V DC						
Residual ripple of supply voltage		≤ 5 %						
Current consumption		max. 0.42 A total max. 20 mA with inactive switching output						
Weight		~ 60 g						

Note: Reverse polarity protection of the supply voltage, overvoltage, override and short circuit protection are provided.
FS (**F**ull **S**cale) = relative to complete measuring range

[1] Other seal materials on request
[2] -25 °C with FKM seal, -40 °C on request
[3] With mounted mating connector in corresponding protection class (M12x1)
[4] Additional electrical connection options, such as cables with various connector variants, available on request

Dimensions:

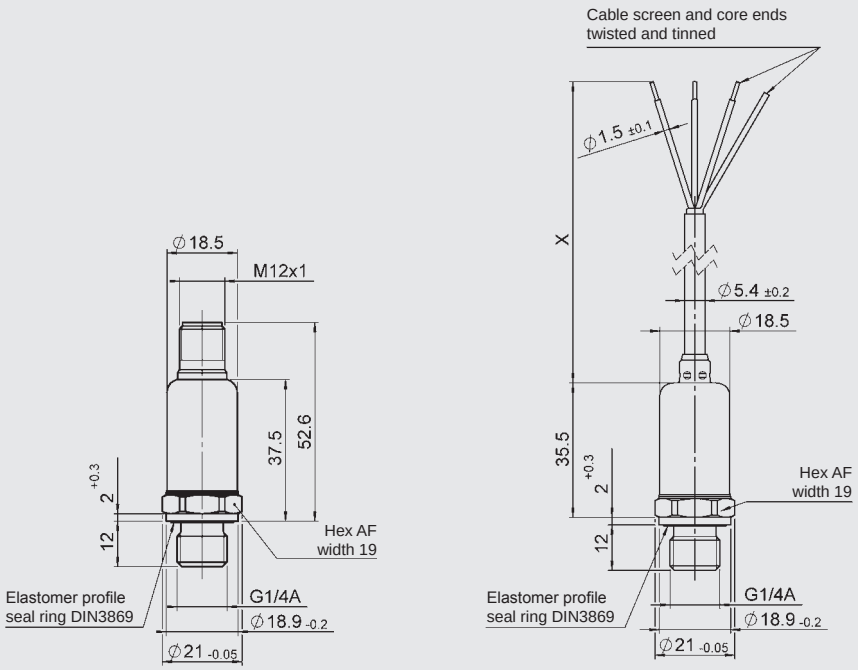

Note:

The information in this brochure relates to the operating conditions and applications described.

For applications or operating conditions not described, please contact the relevant technical department.

Subject to technical modifications.

Order details:

The electronic pressure switch EDS 710 has been specially developed for OEM customers and is available for minimum order quantities of 100 units per type.

For precise specifications, please contact the Sales Department of HYDAC ELECTRONIC.

HYDAC ELECTRONIC GMBH
Hauptstr. 27, 66128 Saarbrücken
Germany
Telephone +49 (0)6897 509-01
Fax +49 (0)6897 509-1726
e-mail: electronic@hydac.com
Internet: www.hydac.com

Pressure Switch
EDS 810 for series applications

Relative pressure | **Factory-set**

Customised designs thanks to diverse electrical and mechanical connections
Up to 2 switching outputs

Description:

The electronic pressure switch EDS 810 has been specially developed for use in series applications.

The highly compact unit has a very robust pressure sensor with thin-film strain gauge.

All of the parts in contact with the fluid (sensor and pressure port) are made of stainless steel and are welded together. This means that there are no sealing points in the interior of the sensor. The risk of leakage has been eliminated.

The transistor output is available with either an N/C or a N/O function. The switch and switch-back point of the EDS 810 each are factory-set acc. to customer specification (not field-adjustable). Various pressure ranges between 0 and 40 bar and 0 and 600 bar are available.

Especially for the use in public traffic vehicles, EDS 810 has E13 approval (approved for road vehicles) in accordance with ECE type approval.

Technical data:

Input data								
Measuring ranges	bar	40	60	100	160	250	400	600
Overload pressures	bar	80	120	200	320	500	800	1000
Burst pressure	bar	200	300	500	800	1250	2000	2000
Mechanical connection				G1/4 A ISO 1179-2 7/16-20 UNF 2A 9/16-18 UNF 2A				
Tightening torque, recommended				15 Nm (7/16-20 UNF 2A) 20 Nm (G1/4 A ISO 1179-2, 9/16-18 UNF 2A)				
Parts in contact with fluid[1]				Mech. connection: Stainless steel Seal: FKM				
Output data								
Switching output				- 1 PNP or 1 NPN transistor output - 2 PNP transistor outputs (only in conjunction with electrical connection M12x1, 4 pole, DT04-4p, DIN 72585-4p) Switching current: ≤ 500 mA per switching output Switching cycles: > 100 million Switch point/switch-back point: acc. to customer specification Switch-on and switch-off delay: 8 .. 2000 ms (standard 32 ms); factory-set acc. to customer specification				
Accuracy acc. to DIN 16086, terminal based				≤ ± 0.5 % FS typ. ≤ ± 1 % FS max.				
Temperature compensation, zero point				≤ ± 0.02 % FS / °C typ. ≤ ± 0.03 % FS / °C max.				
Temperature compensation, span				≤ ± 0.02 % FS / °C typ. ≤ ± 0.03 % FS / °C max.				
Repeatability				≤ 0.1 % FS max.				
Long-term drift				≤ ± 0.3 % FS typ. / year				
Environmental conditions								
Compensated temperature range				-25 .. +85 °C				
Operating temperature range[2]				-40 .. +100 °C / -25 .. +100 °C				
Storage temperature range				-40 .. +100 °C				
Fluid temperature range[2]				-40 .. +125 °C / -25 .. +125 °C				
CE mark				EN 61000-6-1 / 2 / 3 / 4				
c UL us mark[3]				Certificate no.: E318391				
E13 mark				E13*10R00*1DR03*3969*01				
Vibration resistance acc. to DIN EN 60068-2-6				≤ 25 g (at 5 .. 2000 Hz)				
Shock resistance acc. to DIN EN 60068-2-27				100 g / 6 ms / half-sine 500 g / 1 ms / half-sine				
Protection class[4] acc. to DIN EN 60529 ISO 20653				IP 65, IP 67 IP 6K9K				
Other data								
Electrical connection				Various male connectors e.g. M12x1, Packard Metri Pack, Deutsch DT 04, AMP Superseal, AMP Junior Power Timer, jacketed cable				
Supply voltage when applied acc. to UL specifications				8 .. 36 V DC - limited energy - acc. to 9.3 UL 61010; Class 2; UL 1310/1585; LPS UL 60950				
Residual ripple of supply voltage				≤ 5 %				
Current consumption				1 PNP max. 0.52 A total / max. 20 mA with inactive switching output 2 PNP max. 1.02 A total /max. 20 mA with inactive switching outputs NPN max. 20 mA total				
Weight				~ 55 g				

Note: Reverse polarity protection of the supply voltage, overvoltage, override and short circuit protection are provided.
FS (**F**ull **S**cale) = relative to complete measuring range

[1] Other seal materials on request
[2] -25 °C with FKM seal, -40 °C on request
[3] Environmental conditions acc. to 1.4.2 UL 61010-1; C22.2 No 61010-1
[4] With mounted mating connector in corresponding protection class

Dimensions:

Male connector
DIN 72585
3 pole/4 pole

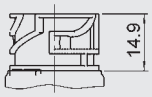

Male connector
Deutsch DT 04
3 pole

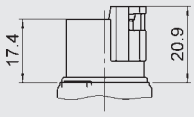

Male connector
Deutsch DT 04
4 pole

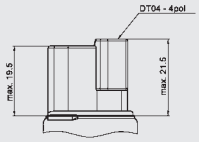

Male connector
Junior Power Timer
3 pole

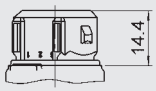

Male connector
Metri-Pack series 150
3 pole

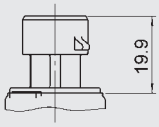

Jacketed cable

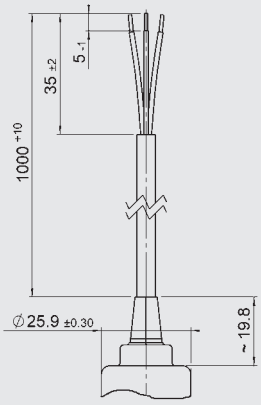

Male connector
DIN EN175301-803
3 pole

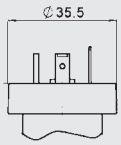

Male connector
Superseal series 1.5
3 pole

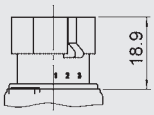

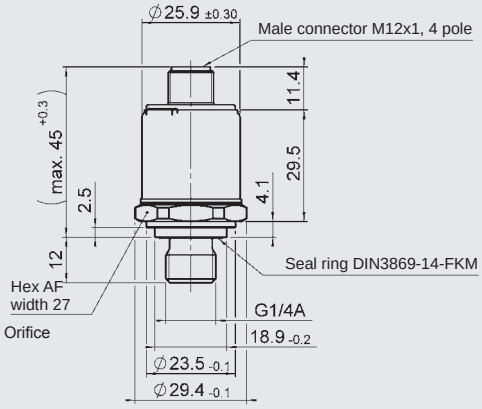

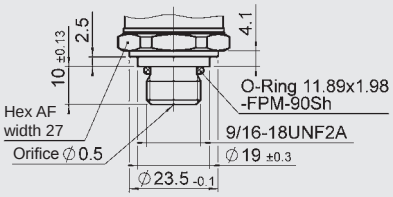

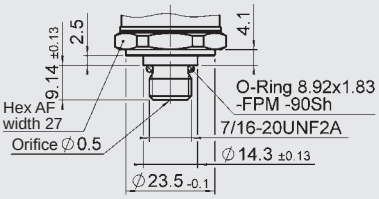

Order details:

The electronic pressure switch EDS 810 has been specially developed for OEM customers and is available for minimum order quantities of 500 units per type.

For precise specifications, please contact the Sales Department of HYDAC ELECTRONIC.

Note:

The information in this brochure relates to the operating conditions and applications described.

For applications or operating conditions not described, please contact the relevant technical department.

Subject to technical modifications.

HYDAC ELECTRONIC GMBH
Hauptstr. 27, 66128 Saarbrücken
Germany
Telephone +49 (0)6897 509-01
Fax +49 (0)6897 509-1726
e-mail: electronic@hydac.com
Internet: www.hydac.com

Pressure Switch EDS 8000

Relative pressure | **Display**

Up to 2 switching outputs

Description:

EDS 8000 is an electronic pressure switch in compact design which is simple to adjust. Models with one or two transistor outputs (PNP or NPN) are available.

The switch points are set using the two keys and a four-digit display. During operation the switching position is indicated by either a red or a green backlight in the display.

For optimum adaptation to a particular application, the instrument has many additional adjustment parameters, e.g. switching delay times, N/O / N/C function of the outputs.

EDS 8000 is available in various pressure ranges between 0 .. 25 bar and 0 .. 600 bar.

The main applications of the EDS 8000 are to indicate pressures and limits in hydraulics and pneumatics, or any application where high switching frequency or constant switching accuracy would overburden a mechanical pressure switch.

Technical data:

Input data							
Measuring ranges	bar	25	40	100	250	400	600
Overload pressures	bar	80	80	200	500	800	1000
Burst pressure	bar	200	200	500	1000	2000	2000
Mechanical connection			G1/4 A ISO 1179-2				
Tightening torque, recommended			20 Nm				
Parts in contact with fluid			Mech. connection: Stainless steel Seal: FKM				
Output data							
Switching outputs			1 or 2 transistor outputs PNP or NPN Switching current: max. 250 mA per output Switching cycles: > 100 million				
Accuracy acc. to DIN 16086, terminal based			≤ ± 0.5 % FS typ. ≤ ± 1 % FS max.				
Temperature compensation, zero point			≤ ± 0.02 % FS / °C typ. ≤ ± 0.03 % FS / °C max.				
Temperature compensation, span			≤ ± 0.02 % FS / °C typ. ≤ ± 0.03 % FS / °C max.				
Repeatability			≤ ± 0.5 % FS max.				
Reaction time			< 10 ms				
Long-term drift			≤ ± 0.25 % FS max. / year				
Environmental conditions							
Compensated temperature range			-25 .. +85 °C				
Operating temperature range[1)]			-40 .. +100 °C / -25 .. +100 °C				
Nominal temperature range of display (read-out)			-15 .. + 70 °C				
Storage temperature range			-40 .. 85 °C				
Fluid temperature range[1)]			-40 .. +125 °C / -25 .. +125 °C				
CE mark			EN 61000-6-1 / 2 / 3 / 4				
cULus mark[2)]			Certificate no.: E318391				
Vibration resistance acc. to DIN EN 60068-2-6 (0 .. 500 Hz)			approx. 10 g				
Shock resistance acc. to DIN EN 60068-2-27 (11 ms)			approx. 50 g				
Protection class acc. to DIN EN 60529[3)]			IP 67				
Other data			≤ 5 %				
Supply voltage when applied acc. to UL specifications			9.6 .. 32 V DC - limited energy - acc. to 9.3 UL 61010; Class 2; UL 1310/1585; LPS UL 60950				
Residual ripple of supply voltage							
Current consumption			max. 0.535 A total max. 35 mA (with inactive switching output)				
Display			4-digit, LED, 7-segment, height of digits 4.5 mm				
Weight			~ 70 g				

Note: Reverse polarity protection of the supply voltage, overvoltage, override and short circuit protection are provided.
FS (**F**ull **S**cale) = relative to complete measuring range

1) -25 °C with FKM seal, -40 °C on request
2) Environmental conditions acc. to 1.4.2 UL 61010-1; C22.2 No 61010-1
3) With mounted mating connector in corresponding protection class

Setting options:

All the terms and symbols used for setting the EDS 8000 as well as menu structure comply with the specifications of the German Engineering Federation Standard (VDMA 24574-1) for pressure switches. The EDS 8000 is easy and convenient to set up using the two buttons.

Setting ranges for the switching outputs:

Measuring range in bar	Lower limit of RP / FL in bar	Upper limit of SP / FH in bar
0 .. 25	0.25	25.00
0 .. 40	0.4	40.0
0 .. 100	1.0	100.0
0 .. 250	2.5	250.0
0 .. 400	4	400
0 .. 600	6	600

Measuring range in bar	Min. difference betw. RP and SP & FL and FH	Incre-ment* in bar
0 .. 25	0.25	0.05
0 .. 40	0.4	0.1
0 .. 100	1.0	0.2
0 .. 250	2.5	0.5
0 .. 400	4	1
0 .. 600	6	1

* All ranges given in the table can be adjusted by the increments shown.
SP = switch point
RP = switch-back point
FL = pressure window lower value
FH = pressure window upper value

Additional functions:

- Switching mode of the switching outputs adjustable (switch point function or window function)
- Switching direction of the switching outputs adjustable (N/C or N/O function)
- Switch-on and switch-off delay adjustable from 0.00 .. 99.99 seconds
- Display filter for smoothing the display value during pressure pulsations
- Pressure can be displayed in bar, psi, MPa

Pin connections:

M12x1, 4 pole

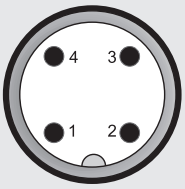

Pin	EDS 8446-1	EDS 8446-2
1	$+U_B$	$+U_B$
2	n.c.	SP2
3	0 V	0 V
4	SP1	SP1

Dimensions:

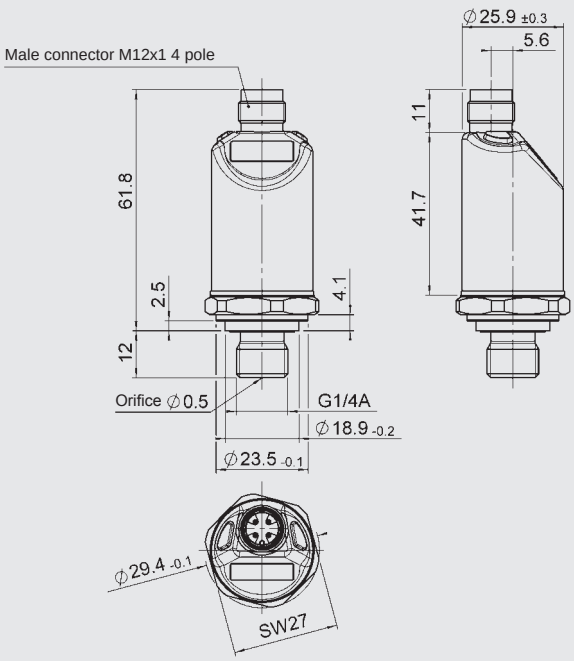

Model code:

EDS 8 4 4 6 - X - XXXX – X00

Mechanical connection
4 = G 1/4 A ISO 1179-2

Electrical connection
6 = male M12x1, 4 pole
(mating connector not supplied)

Output
1 = 1 switching output
2 = 2 switching outputs

Measuring ranges in bar
0025; 0040; 0100; 0250; 0400; 0600

Modification number
000 = standard
N00 = version with NPN switching outputs

Accessories:
Appropriate accessories, such as mating connectors and mechanical adapters, can be found in the Accessories brochure.

Note:

The information in this brochure relates to the operating conditions and applications described.

For applications or operating conditions not described, please contact the relevant technical department.

Subject to technical modifications.

HYDAC ELECTRONIC GMBH
Hauptstr. 27, 66128 Saarbrücken
Germany
Telephone +49 (0)6897 509-01
Fax +49 (0)6897 509-1726
e-mail: electronic@hydac.com
Internet: www.hydac.com

Pressure Switch EDS 3300

Relative pressure | **Display**

Flush membrane
Up to 2 switching outputs
Analogue output

Description:

The electronic pressure switch EDS 3300 with a flush membrane was designed specifically for applications in which a standard pressure port could become blocked, clogged or frozen by the particular medium used.

Further applications include processes where the medium changes frequently and any residues could cause mixing or contamination of the media.

Like the standard model, the EDS 3300 with flush membrane has a ceramic measurement cell with a thick-layer strain gauge for relative pressure measurement in a low pressure range.

The pressure port is achieved with a fully sealed stainless steel front membrane filled internally with a pressure transfer fluid. The process pressure is transmitted hydrostatically to the measurement cell via the pressure transfer fluid.

Depending on the type, the instrument can have up to two switching outputs and a switchable analogue output (4 .. 20 mA or 0 .. 10 V).

Technical data:

Input data							
Measuring ranges	bar	-1..1	1	2.5	6	10	16
Overload pressures	bar	3	3	8	18	30	48
Burst pressure	bar	5	5	12	30	50	80
Mechanical connection	See model code						
Tightening torque, recommended	20 Nm (G1/4); 45 Nm (G1/2)						
Parts in contact with fluid	Mech. connection: Stainless steel Sensor cell: Ceramic Seal: FKM O-ring: FKM						
Pressure transfer fluid	Silicone-free oil						
Output data							
Switching outputs	1 or 2 PNP transistor outputs Switching current: max. 1.2 A per output Switching cycles: > 100 million						
Analogue output, permitted load resistance	Selectable: 4 .. 20 mA load resist. max. 500 Ω 0 .. 10 V load resist. min. 1 kΩ						
Accuracy acc. to DIN 16086, terminal based	≤ ± 0.5 % FS typ. ≤ ± 1 % FS max.						
Temperature compensation, zero point	≤ ± 0.015 % FS / °C typ. ≤ ± 0.025 % FS / °C max.						
Temperature compensation, span	≤ ± 0.015 % FS / °C typ. ≤ ± 0.025 % FS / °C max.						
Repeatability	≤ ± 0.25 % FS max.						
Reaction time	< 10 ms						
Long-term drift	≤ ± 0.3 % FS typ. / year						
Environmental conditions							
Compensated temperature range	-10 .. +70 °C						
Operating temperature range	-25 .. +80 °C (-25 .. +60 °C for UL spec.)						
Storage temperature range	-40 .. +80 °C						
Fluid temperature range	-25 .. +80 °C / -25 .. +150 °C with cooling section						
CE mark	EN 61000-6-1 / 2 / 3 / 4						
cULus mark [1]	Certificate no.: E318391						
Vibration resistance acc. to DIN EN 60068-2-6 at 10 .. 500 Hz	≤ 10 g						
Shock resistance acc. to DIN EN 60068-2-27 (11 ms)	≤ 50 g						
Protection class acc. to DIN EN 60529[2]	IP 67						
Other data							
Supply voltage	9 .. 35 V DC without analogue output 18 .. 35 V DC with analogue output						
when applied acc. to UL specifications	– limited energy – acc. to 9.3 UL 61010; Class 2; UL 1310/1585; LPS UL 60950						
Residual ripple of supply voltage	≤ 5 %						
Current consumption	max. 2.455 A total max. 35 mA with inactive switching output max. 55 mA with inactive switching output and analogue output						
Display	4-digit, LED, 7-segment, red, height of digits 7 mm						
Weight	~ 150 g						

Note: Overvoltage, override, short circuit protection are provided
FS (**F**ull **S**cale) = relative to complete measuring range

[1] Environmental conditions acc. to 1.4.2 UL 61010-1; C22.2 No 61010-1
[2] With mounted mating connector in corresponding protection class

Setting options:

All settings offered by the EDS 3300 are grouped in 2 easy-to-navigate menus.
In order to prevent unauthorised adjustment of the device, a programming lock can be set.

Setting ranges for the switching outputs:

Switch point function

Meas. range in bar	Switch point in bar	Hysteresis in bar	Incre-ment* in bar
-1 .. 1	-0.97 .. 1	-0.99 .. 0.98	0.01
0 .. 1	0.016 .. 1	0.006 .. 0.99	0.002
0 .. 2.5	0.04 .. 2.5	0.015 .. 2.475	0.005
0 .. 6	0.09 .. 6	0.3 .. 5.94	0.01
0 .. 10	0.16 .. 10	0.06 .. 9.9	0.02
0 .. 16	0.25 .. 16	0.1 .. 15.8	0.05

Window function

Meas. range in bar	Lower switch value in bar	Upper switch value in bar	Incre-ment* in bar
-1 .. 1	-0.97 .. 0.96	-0.95 .. 0.98	0.01
0 .. 1	0.016 .. 0.982	0.024 .. 0.99	0.002
0 .. 2.5	0.04 .. 2.455	0.06 .. 2.475	0.005
0 .. 6	0.09 .. 5.89	0.14 .. 5.94	0.01
0 .. 10	0.16 .. 9.82	0.24 .. 9.9	0.02
0 .. 16	0.25 .. 15.7	0.4 .. 15.8	0.05

* All ranges given in the table can be adjusted by the increments shown.

Additional functions:

- Switching mode of the switching outputs adjustable (switch point function or window function)
- Switching direction of the switching outputs adjustable (N/C or N/O function)
- Switch-on and switch-off delay adjustable from 0.00 .. 99.99 seconds
- Choice of display (actual pressure, peak value, switch point 1, switch point 2, display off)
- Display filter for smoothing the display value during pressure pulsations
- Analogue output signal selectable 4 .. 20 mA or 0 .. 10 V
- Pressure can be displayed in measurement units bar, psi, MPa. The scaling can also be adapted to indicate force, weight, etc.

Pin connections:

M12x1, 4 pole

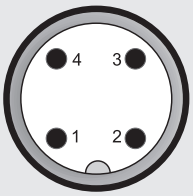

Pin	EDS 33Z6-1	EDS 33Z6-2	EDS 33Z6-3
1	$+U_B$	$+U_B$	$+U_B$
2	n.c.	SP2	Analogue
3	0 V	0 V	0 V
4	SP1	SP1	SP1

M12x1, 5 pole

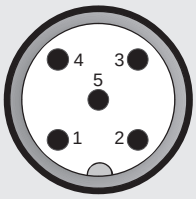

Pin	EDS 33Z8-5
1	$+U_B$
2	Analogue
3	0 V
4	SP1
5	SP2

Dimensions:

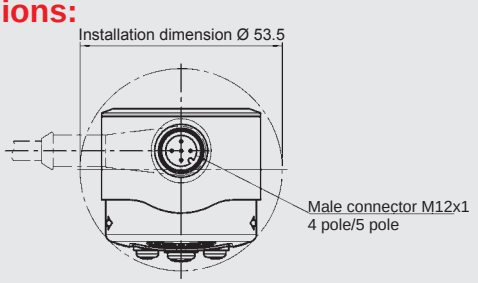

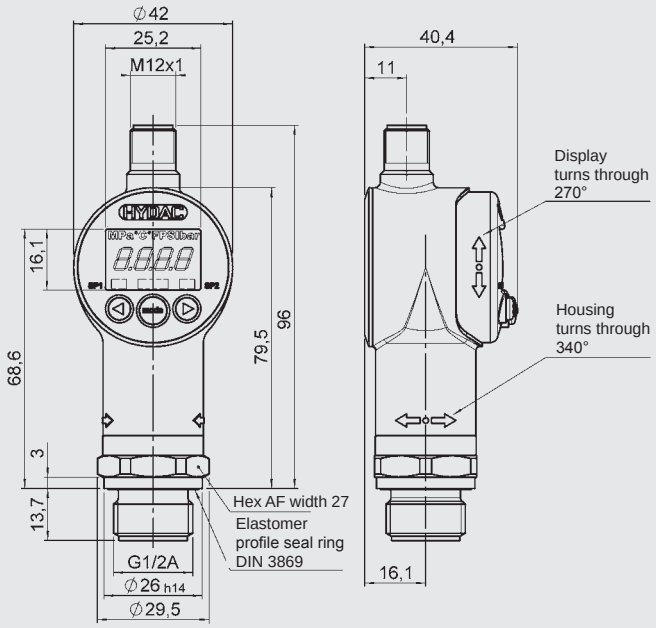

[G01]

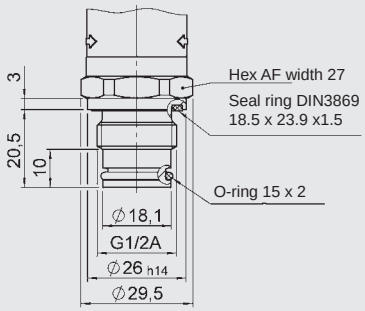

[G02]

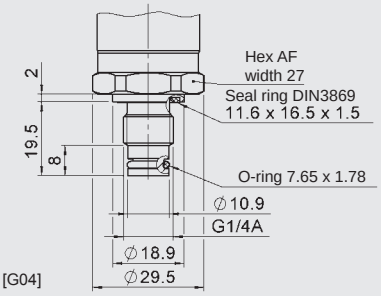

[G04]

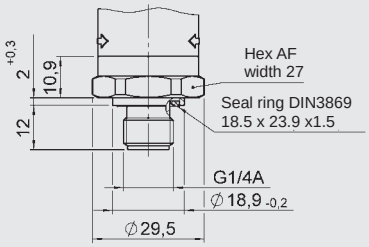

[G05]

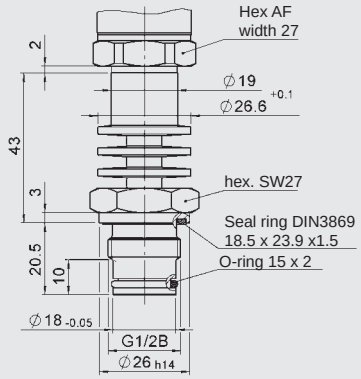

[G12]

Model code:

EDS 3 3 Z X – X – XXXX – XXX – 000

Mechanical process connection
Z = flush membrane

Electrical connection
6 = male M12x1, 4 pole
only possible on output models "1", "2" and "3"
8 = male M12x1, 5 pole
only possible on output model "5"

Output
1 = 1 switching output
only in conjunction with electrical connection type "6"
2 = 2 switching outputs
only in conjunction with electrical connection type "6"
3 = 1 switching output and 1 analogue output
only in conjunction with electrical connection type "6"
5 = 2 switching outputs and 1 analogue output
only in conjunction with electrical connection type "8"

Measuring ranges in bar
01.0; 02.5; 06.0; 0010; 0016
0001 (-1 .. 1)

Mechanical connection
G01 = G1/2 A ISO 1179-2
G02 = G1/2 with additional front O-ring seal
G04 = G1/4 with additional front O-ring seal
G05 = G1/4 A ISO 1179-2
G12 = G1/2 with additional front O-ring seal and cooling section

Modification number
000 = standard

Accessories:
Appropriate accessories, such as mating connectors, can be found in the Accessories brochure.

Note:

The information in this brochure relates to the operating conditions and applications described.

For applications or operating conditions not described, please contact the relevant technical department.

Subject to technical modifications.

HYDAC ELECTRONIC GMBH
Hauptstr. 27, 66128 Saarbrücken
Germany
Telephone +49 (0)6897 509-01
Fax +49 (0)6897 509-1726
e-mail: electronic@hydac.com
Internet: www.hydac.com

Pressure Switch EDS 3400

Relative pressure | **Display**

Flush membrane
Up to 2 switching outputs
Analogue output

Description:

The electronic pressure switch EDS 3400 with a flush membrane was designed specifically for applications in which a standard pressure port could become blocked, clogged or frozen by the particular medium used.

Further applications include processes where the medium changes frequently and any residues could cause mixing or contamination of the media.

Like the standard model, the EDS 3400 with flush membrane has a measurement cell with a thin-film strain gauge on a stainless steel membrane for relative pressure measurement in the high pressure range.

The pressure port is achieved with a fully sealed stainless steel front membrane filled internally with a pressure transfer fluid. The process pressure is transmitted hydrostatically to the measurement cell via the pressure transfer fluid.

Depending on the type, the instrument can have up to two switching outputs and one switchable analogue output (4 .. 20 mA or 0 .. 10 V).

Technical data:

Input data						
Measuring ranges	bar	40	100	250	400	600
Overload pressures	bar	80	200	500	800	1000
Burst pressure	bar	200	500	1000	2000	2000
Mechanical connection			See model code			
Tightening torque, recommended			20 Nm (G 1/4); 45 Nm (G 1/2)			
Parts in contact with fluid			Mech. connection: Stainless steel Seal: FKM O-ring: FKM			
Pressure transfer fluid			Silicone-free oil			
Output data						
Switching outputs			1 or 2 PNP transistor outputs Switching current: max. 1.2 A per output Switching cycles: > 100 million			
Analogue output, permitted load resistance			Selectable: 4 .. 20 mA load resist. max. 500 Ω 0 .. 10 V load resist. min. 1 kΩ			
Accuracy acc. to DIN 16086, terminal based			≤ ± 0.5 % FS typ. ≤ ± 1 % FS max.			
Temperature compensation, zero point			≤ ± 0.015 % FS / °C typ. ≤ ± 0.025 % FS / °C max.			
Temperature compensation, span			≤ ± 0.015 % FS / °C typ. ≤ ± 0.025 % FS / °C max.			
Repeatability			≤ ± 0.25 % FS max.			
Reaction time			< 10 ms			
Long-term drift			≤ ± 0.3 % FS typ. / year			
Environmental conditions						
Compensated temperature range			-10 .. +70 °C			
Operating temperature range			-25 .. +80 °C (-25 .. +60 °C for UL spec.)			
Storage temperature range			-40 .. +80 °C			
Fluid temperature range			-25 .. +80 °C / -25 .. +150 °C with cooling section			
CE mark			EN 61000-6-1 / 2 / 3 / 4			
c UL us mark[1]			Certificate no.: E318391			
Vibration resistance acc. to DIN EN 60068-2-6 at 10 .. 500 Hz			≤ 10 g			
Shock resistance acc. to DIN EN 60068-2-27 (11 ms)			≤ 50 g			
Protection class acc. to DIN EN 60529[2]			IP 67			
Other data						
Supply voltage			9 .. 35 V DC without analogue output 18 .. 35 V DC with analogue output			
when applied acc. to UL specifications			– limited energy – acc. to 9.3 UL 61010; Class 2; UL 1310/1585; LPS UL 60950			
Residual ripple of supply voltage			≤ 5 %			
Current consumption			max. 2.455 A total max. 35 mA with inactive switching output max. 55 mA with inactive switching output and analogue output			
Display			4-digit, LED, 7 segment, red, height of digits 7 mm			
Weight			~ 150 g			

Note: Overvoltage, override protection and short circuit protection are provided.
FS (**F**ull **S**cale) = relative to complete measuring range

[1] Environmental conditions acc. to 1.4.2 UL 61010-1; C22.2 No. 61010-1
[2] With mounted mating connector in corresponding protection class

Setting options:

All settings available on the EDS 3400 are grouped in 2 easy-to-navigate menus.
In order to prevent unauthorised adjustment of the device, a programming lock can be set.

Setting ranges for the switching outputs:

Switch point function

Measuring range in bar	Switch point in bar	Hysteresis in bar	Increment* in bar
0 .. 40	0.6 .. 40	0.2 .. 39.6	0.1
0 .. 100	1.6 .. 100	0.6 .. 99.0	0.2
0 .. 250	4.0 .. 250	1.5 .. 247.5	0.5
0 .. 400	6.0 .. 400	2.0 .. 396	1
0 .. 600	9.0 .. 600	3.0 .. 594	1

Window function

Measuring range in bar	Lower switch value in bar	Upper switch value in bar	Increment* in bar
0 .. 40	0.6 .. 39.2	0.9 .. 39.6	0.1
0 .. 100	1.6 .. 98.2	2.4 .. 99	0.2
0 .. 250	4.0 .. 245.5	6.0 .. 247.5	0.5
0 .. 400	6.0 .. 392	9.0 .. 396	1
0 .. 600	9.0 .. 589	14 .. 594	1

* All ranges given in the table can be adjusted by the increments shown.

Additional functions:

- Switching mode of the switching outputs adjustable (switch point function or window function)
- Switching direction of the switching outputs adjustable (N/C or N/O function)
- Switch-on and switch-off delay adjustable from 0.00 .. 99.99 seconds
- Choice of display (actual pressure, peak value, switch point 1, switch point 2, display off)
- Display filter for smoothing the display value during pressure pulsations
- Analogue output signal selectable 4 .. 20 mA or 0 .. 10 V
- Pressure can be displayed in measurement units bar, psi, MPa. The scaling can also be adapted to indicate force, weight, etc.

Pin connections:

M12x1, 4 pole

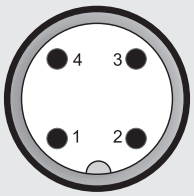

Pin	EDS 34Z6-1	EDS 34Z6-2	EDS 34Z6-3
1	$+U_B$	$+U_B$	$+U_B$
2	n.c.	SP2	Analogue
3	0 V	0 V	0 V
4	SP1	SP1	SP1

M12x1, 5 pole

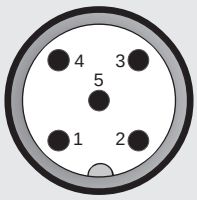

Pin	EDS 34Z8-5
1	$+U_B$
2	Analogue
3	0 V
4	SP1
5	SP2

Dimensions:

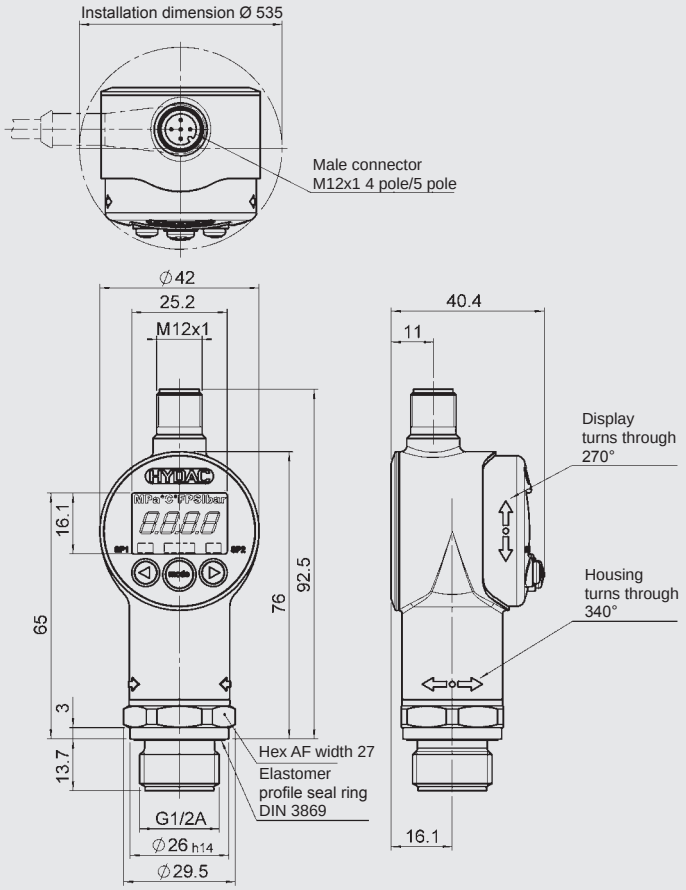

[G01]

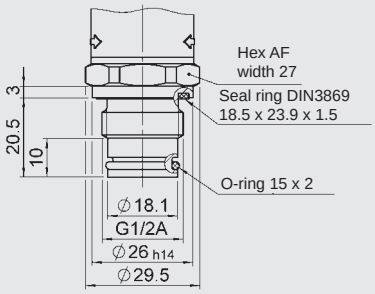

[G02]

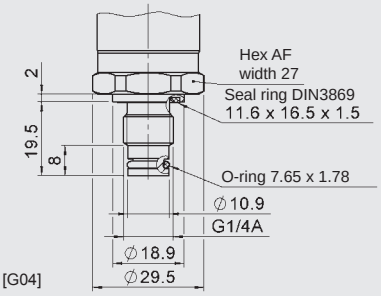

[G04]

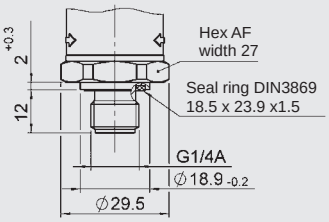

[G05]

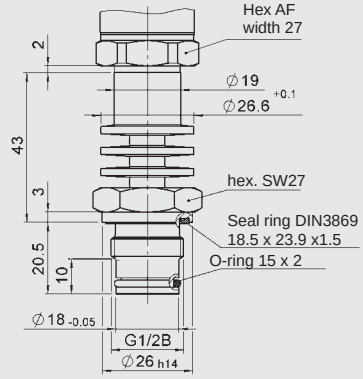

[G12]

Model code:

EDS 3 4 Z X – X – XXXX – XXX – 000

Mechanical process connection
Z = flush membrane

Electrical connection
6 = male M12x1, 4 pole
only possible on output models "1", "2" and "3"

8 = male M12x1, 5 pole
only possible on output model "5"

Output
1 = 1 switching output
only in conjunction with electrical connection type "6"
2 = 2 switching outputs
only in conjunction with electrical connection type "6"
3 = 1 switching output and 1 analogue output
only in conjunction with electrical connection type "6"
5 = 2 switching outputs and 1 analogue output
only in conjunction with electrical connection code type "8"

Measuring ranges in bar
0040; 0100; 0250; 0400; 0600

Mechanical connection
G01 = G1/2 A ISO 1179-2
G02 = G1/2 with additional front O-ring seal
G04 = G1/4 with additional front O-ring seal
G05 = G1/4 A ISO 1179-2
G12 = G1/2 with additional front O-ring seal and cooling section

Modification number
000 = standard

Accessories:
Appropriate accessories, such as mating connectors, can be found in the Accessories brochure.

Note:

The information in this brochure relates to the operating conditions and applications described.

For applications or operating conditions not described, please contact the relevant technical department.

Subject to technical modifications.

HYDAC ELECTRONIC GMBH
Hauptstraße 27, 66128 Saarbrücken
Germany
Telephone +49 (0)6897 509-01
Fax +49 (0)6897 509-1726
E-mail: electronic@hydac.com
Internet: www.hydac.com

Pressure Switch EDS 4300

Relative pressure | **Programmable**

Up to 2 switching outputs

Description:

The programmable electronic pressure switch in the series EDS 4300 was specially developed to combine the advantages of a compact, robust and cost-effective instrument with the benefits of a programmable pressure switch.

The EDS 4300 can be easily programmed using the HYDAC HPG 3000 Programming Unit. Once the programming unit is disconnected from the EDS 4300, the pressure switch retains all the settings. This prevents unauthorised or incorrect adjustment of the settings.

The following parameters can be changed:

- Switch point
- Hysteresis
- Switching direction (N/O / N/C)
- Switching delay times

The EDS 4300 is suitable for low-pressure applications (up to 16 bar) and is equipped with a pressure measurement cell with thick-layer strain gauge on a ceramic membrane.

In contrast to pressure switches which are factory-set acc. to customer requirements and not field-adjustable, the programmable EDS 4300 is highly versatile and replaces a wide range of models. This is advantageous in respect of stock management.

An ATEX version of the EDS 4300 is also available for use in potentially explosive atmospheres.

Technical data:

Input data								
Measuring ranges	bar	1	2.5	6	10	16	-1 .. 1	-1 .. 9
Overload pressures	bar	3	8	20	32	50	3	32
Burst pressure	bar	5	12	30	48	75	5	48
Mechanical connection				G1/4 A ISO 1179-2				
Tightening torque, recommended				20 Nm				
Parts in contact with fluid				Mech. connection: Stainless steel Sensor cell: Ceramic Seal: FKM/EPDM (as per model code)				
Output data								
Switching outputs				1 or 2 transistor outputs PNP or NPN Switching current: PNP: max. 1.2 A with 1 switching output max. 1 A each with 2 switching outputs NPN: max. 0.5 A with 1 switching output max. 0.3 A each with 2 switching outputs Switching cycles: > 100 million Switch points/hysteresis: user-programmable with HYDAC Programming Unit HPG 3000 Switch-on and switch-off delay: 8 .. 2000 ms; user-programmable with HYDAC Programming Unit HPG 3000				
Accuracy acc. to DIN 16086, terminal based				≤ ± 0.5 % FS typ. ≤ ± 1 % FS max.				
Temperature compensation, zero point				≤ ± 0.02 % FS / °C typ. ≤ ± 0.03 % FS / °C max.				
Temperature compensation, span				≤ ± 0.02 % FS / °C typ. ≤ ± 0.03 % FS / °C max.				
Repeatability				≤ ± 0.1 % FS max.				
Long-term drift				≤ ± 0.3 % FS typ. / year				
Environmental conditions								
Compensated temperature range				-25 .. +85 °C				
Operating temperature range[1]				-40 .. +85 °C / -25 .. +85 °C				
Storage temperature range				-40 .. +100 °C				
Fluid temperature range[1]				-40 .. +100 °C / -25 .. +100 °C				
CE mark				EN 61000-6-1 / 2 / 3 / 4				
c UL us mark[2]				Certificate no.: E318391				
Vibration resistance acc. to DIN EN 60068-2-6 at 10 .. 500 Hz				≤ 20 g				
Shock resistance acc. to DIN EN 60068-2-27 (1 ms)				≤ 100 g				
Protection class acc. to DIN EN 60529[3]				IP 67				
Other data								
Supply voltage when applied acc. to UL specifications				8 .. 32 V DC - limited energy - acc. to 9.3 UL 61010; Class 2; UL 1310/1585; LPS UL 60950				
Residual ripple of supply voltage				≤ 5 %				
Current consumption				≤ 25 mA with inactive switching outputs ≤ 1.225 A with 1 switching output ≤ 2.025 A with 2 switching outputs				
Weight				~ 145 g				

Note: Reverse polarity protection of the supply voltage, overvoltage, override and short circuit protection are provided.
FS (**F**ull **S**cale) = relative to complete measuring range

[1] -25 °C with FKM seal, -40 °C on request
[2] Environmental conditions acc. to 1.4.2 UL 61010-1; C22.2 No 61010-1
[3] With mounted mating connector in corresponding protection class

Setting options:

In conjunction with the HYDAC Programming Unit HPG 3000, all the settings are combined in an easy-to-follow menu.

Setting ranges for the switching outputs:

Measuring range in bar	Increment in bar
-1 .. 1	0.01
0 .. 1	0.002
0 .. 2.5	0.005
0 .. 6	0.01
-1 .. 9	0.02
0 .. 10	0.02
0 .. 16	0.05

The switch point (upper switch value) on all instruments is between 5 % and 100 % of the measuring range and the switch-back point (lower switch value) is between 1 % and 96 % of the measuring range.

	Minimum value in ms	Maximum value in ms
Switch-on delay Ton1/Ton2	8	2040
Switch-off delay ToF1/ToF2	8	2040

The increment for all instruments is 8 ms.

Pin connections:

M12x1, 5 pole

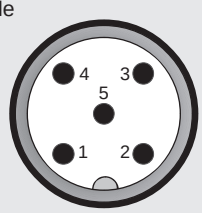

Pin	Process connection	HPG connection
1	$+U_B$	$+U_B$
2	Out 2	n.c.
3	0 V	0 V
4	Out 1	n.c.
5	n.c.	Comport

Dimensions:

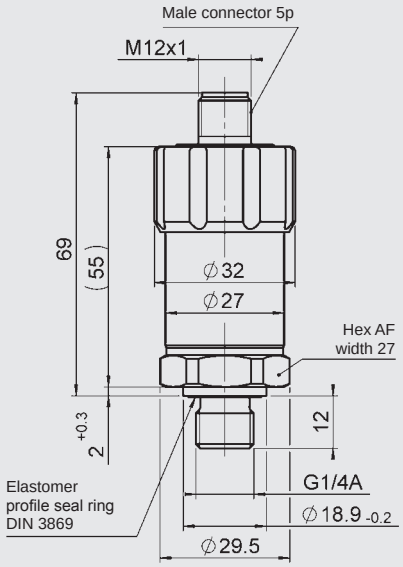

Programming Unit:

(to be ordered separately)

HPG 3000 – 000
Portable Programming Unit
Part No. 909422

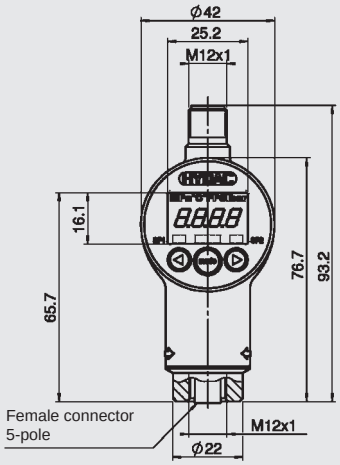

Model code:

EDS 4 3 4 8 – XXXX – X – P X – 000 – X 1

Mechanical connection
4 = G1/4 A ISO 1179-2

Electrical connection
8 = male M12x1, 5 pole

Measuring ranges in bar
01.0; 02.5; 06.0; 0010; 0016
0001(-1 .. 1); 0009(-1 .. 9)

Number of switching outputs
1 = 1 switching output
2 = 2 switching outputs

Output technology
P = programmable switching output

Output technology 2
P = PNP switching output
N = NPN switching output

Modification number
000 = standard

Seal material (in contact with fluid)
F = FKM seal (e.g. for hydraulic oils)
E = EPDM seal (e.g. for water or refrigerants)

Connection material (in contact with fluid)
1 = stainless steel

Accessories:
Appropriate accessories, such as mating connectors, can be found in the Accessories brochure.

Note:

The information in this brochure relates to the operating conditions and applications described.

For applications or operating conditions not described, please contact the relevant technical department.

Subject to technical modifications.

HYDAC ELECTRONIC GMBH
Hauptstr. 27, 66128 Saarbrücken
Germany
Telephone +49 (0)6897 509-01
Fax +49 (0)6897 509-1726
e-mail: electronic@hydac.com
Internet: www.hydac.com

Pressure Switch EDS 4400

Relative pressure | **Programmable**

Up to 2 switching outputs

Description:

The programmable electronic pressure switch in the series EDS 4400 was specially developed to combine the advantages of a compact, robust and cost-effective instrument with the benefits of a programmable pressure switch.

The EDS 4400 can be easily programmed using the HYDAC HPG 3000 Programming Unit. Once the programming unit is disconnected from the EDS 4400, the pressure switch retains all the settings. This prevents unauthorised or incorrect adjustment of the settings.

The following parameters can be changed:

- Switch point
- Hysteresis
- Switching direction (N/O / N/C)
- Switching delay times

The EDS 4400 is suitable for high-pressure applications (starting at 40 bar) and has a pressure measurement cell with thin-film strain gauge on a stainless steel membrane.

In contrast to pressure switches which are factory-set acc. to customer requirements and not field-adjustable, the programmable EDS 4400 is highly versatile and replaces a wide range of models. This is advantageous in respect of stock management.

An ATEX version of the EDS 4400 is also available for use in potentially explosive atmospheres.

Technical data:

Input data							
Measuring ranges	bar	40	100	250	400	600	1000
Overload pressures	bar	80	200	500	800	1000	1600
Burst pressure	bar	200	500	1000	2000	2000	3000
Mechanical connection			G1/4 A ISO 1179-2				
Tightening torque, recommended			20 Nm				
Parts in contact with fluid			Mech. connection: Stainless steel Seal: FKM				
Output data							
Switching outputs			1 or 2 transistor outputs PNP or NPN Switching current: PNP: max. 1.2 A with 1 switching output max. 1 A each with 2 switching outputs NPN: max. 0.5 A with 1 switching output max. 0.3 A each with 2 switching outputs Switching cycles: > 100 million Switch points/hysteresis: user-programmable with HYDAC Programming Unit HPG 3000 Switch-on and switch-off delay: 8 .. 2000 ms; user-programmable with HYDAC Programming Unit HPG 3000					
Accuracy acc. to DIN 16086, terminal based			≤ ± 0.5 % FS typ. ≤ ± 1 % FS max.				
Temperature compensation, zero point			≤ ± 0.02 % FS / °C typ. ≤ ± 0.03 % FS / °C max.				
Temperature compensation, span			≤ ± 0.02 % FS / °C typ. ≤ ± 0.03 % FS / °C max.				
Repeatability			≤ ± 0.1 % FS max.				
Long-term drift			≤ ± 0.3 % FS typ. / year				
Environmental conditions							
Compensated temperature range			-25 .. +85 °C				
Operating temperature range[1)]			-40 .. +85 °C / -25 .. +85 °C				
Storage temperature range			-40 .. +100 °C				
Fluid temperature range[1)]			-40 .. +100 °C / -25 .. +100 °C				
CE mark			EN 61000-6-1 / 2 / 3 / 4				
cULus mark[2)]			Certificate no.: E318391				
Vibration resistance acc. to DIN EN 60068-2-6 at 10 .. 500 Hz			≤ 20 g				
Shock resistance acc. to DIN EN 60068-2-27 (1 ms)			≤ 100 g				
Protection class acc. to DIN EN 60529[3)]			IP 67				
Other data							
Supply voltage when applied acc. to UL specifications			8 .. 32 V DC - limited energy - acc. to 9.3 UL 61010; Class 2; UL 1310/1585; LPS UL 60950				
Residual ripple of supply voltage			≤ 5 %				
Current consumption			≤ 25 mA with inactive switching outputs ≤ 1.225 A with 1 switching output ≤ 2.025 A with 2 switching outputs				
Weight			~ 145 g				

Note: Reverse polarity protection of the supply voltage, overvoltage, override and short circuit protection are provided.
FS (**F**ull **S**cale) = relative to complete measuring range

1) -25 °C with FKM seal, -40 °C on request
2) Environmental conditions acc. to 1.4.2 UL 61010-1; C22.2 No 61010-1
2) With mounted mating connector in corresponding protection class

Setting options:

In conjunction with the HYDAC Programming Unit HPG 3000, all the settings are combined in an easy-to-follow menu.

Setting ranges for the switching outputs:

Measuring range in bar	Increment in bar
0 .. 40	0.1
0 .. 100	0.2
0 .. 250	0.5
0 .. 400	1
0 .. 600	1
0 .. 1000	2

The switch point (upper switch value) on all instruments is between 5 % and 100 % of the measuring range and the switch-back point (lower switch value) is between 1 % and 96 % of the measuring range.

	Minimum value in ms	Maximum value in ms
Switch-on delay Ton1/Ton2	8	2040
Switch-off delay ToF1/ToF2	8	2040

The increment for all instruments is 8 ms.

Pin connections:

M12x1, 5 pole

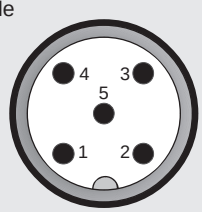

Pin	Process connection	HPG connection
1	$+U_B$	$+U_B$
2	Out 2	n.c.
3	0 V	0 V
4	Out 1	n.c.
5	n.c.	Comport

Dimensions:

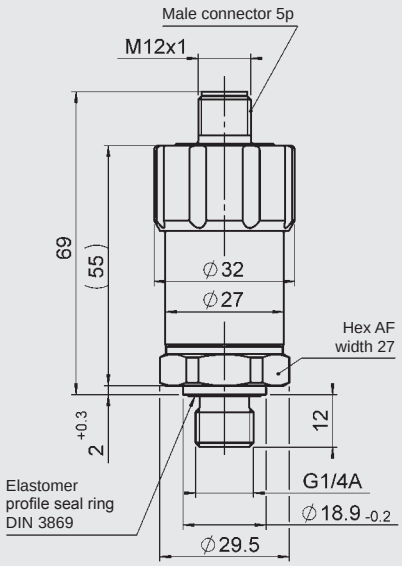

Programming Unit:

(to be ordered separately)

HPG 3000 – 000
Portable Programming Unit
Part No. 909422

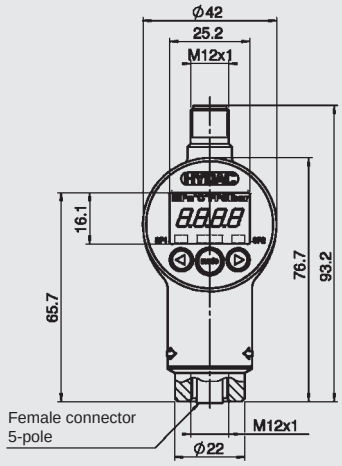

Model code:

EDS 4 4 4 8 – XXXX – X – P X – 000

Mechanical connection
4 = G1/4 A ISO 1179-2

Electrical connection
8 = male M12x1, 5 pole

Measuring ranges in bar
0040; 0100; 0250; 0400; 0600; 1000

Number of switching outputs
1 = 1 switching output
2 = 2 switching outputs

Output technology
P = programmable switching output

Output technology 2
P = PNP switching output
N = NPN switching output

Modification number
000 = standard

Accessories:
Appropriate accessories, such as mating connectors, can be found in the Accessories brochure.

Note:

The information in this brochure relates to the operating conditions and applications described.

For applications or operating conditions not described, please contact the relevant technical department.

Subject to technical modifications.

HYDAC ELECTRONIC GMBH
Hauptstr. 27, 66128 Saarbrücken
Germany
Telephone +49 (0)6897 509-01
Fax +49 (0)6897 509-1726
e-mail: electronic@hydac.com
Internet: www.hydac.com

Pressure Switch EDS 3300

Relative pressure | **Display**

IO-Link

IO-Link

Description:

The EDS 3300 with IO-Link communication interface is a compact electronic pressure switch with integrated digital display for relative pressure measurement in the low-pressure range.

The instrument has a switching output and an additional output that can be configured as switching or analogue output (4 .. 20 mA or 0 .. 10 V).

IO-Link is the communication between the sensor/actuator (IO-Link device) and an IO-Link master based on a point-to-point interface.

The advantages:
Process data, parameters and diagnostic information of the pressure switch can be transmitted via a standard cable (SDCI mode). The integrated LED display provides information on the operating mode and the switching statuses.

Simple exchange, the IO-Link master saves the parameters of the connected pressure switch and transmits them to the newly connected pressure transmitter when replaced. Thus, time-consuming new parameterisations will no longer be required.

If IO-Link is not used, the sensor still functions as a pressure switch with two switching outputs (SIO mode).

To create customer-specific small series or to duplicate sensor settings across the system, the sensor can also be easily adjusted outside the system to suit the particular application, with the HYDAC Programming Device HPG P1-000, the HYDAC Programming Adapter ZBE P1-000 or by means of the Portable Data Recorder HMG 4000.

Typical fields of application for EDS 3300 IO-Link are machine tools, handling and assembly automation, intralogistics or the packaging industry.

Technical data:

Input data							
Measuring ranges	bar	-1 .. 1	1	2.5	6	10	16
Overload pressures	bar	3	3	8	18	30	48
Burst pressure	bar	5	5	12	30	50	80
Mechanical connection	G1/4 A ISO 1179-2 Threaded port DIN 3852-G1/4						
Tightening torque, recommended	20 Nm						
Parts in contact with fluid	Mech. connection: Stainless steel Sensor cell: Ceramic Seal: FKM / EPDM (as per model code)						
Output data							
Switching outputs	PNP transistor outputs Switching current: max. 250 mA per switching output						
Analogue output, permitted load resistance	Selectable: 4 .. 20 mA load resist. max. 500 Ω 0 .. 10 V load resist. min. 1 kΩ						
Accuracy acc. to DIN 16086, terminal based	≤ ± 0.5 % FS typ. ≤ ± 1 % FS max.						
Temperature compensation, zero point	≤ ± 0.015 % FS / °C typ. ≤ ± 0.025 % FS / °C max.						
Temperature compensation, span	≤ ± 0.015 % FS / °C typ. ≤ ± 0.025 % FS / °C max.						
Repeatability	≤ ± 0.25 % FS max.						
Reaction time	< 10 ms						
Long-term drift	≤ ± 0.3 % FS typ. / year						
Environmental conditions							
Compensated temperature range	-10 .. +70 °C						
Operating temperature range	-25 .. +80 °C (-25 .. +60 °C for UL spec.)						
Storage temperature range	-40 .. +80 °C						
Fluid temperature range	-25 .. +80 °C						
CE mark	EN 61000-6-1 / 2 / 3 / 4						
cULus mark [1]	Certificate-No.: E318391						
Vibration resistance acc. to DIN EN 60068-2-6 (0 .. 500 Hz)	≤ 10 g						
Shock resistance acc. to DIN EN 60068-2-27 (11 ms)	≤ 50 g						
Protection class acc. to DIN EN 60529 [2]	IP 67						
IO-Link specific data							
IO-Link revision	V1.1 / support V1.0						
Transmission rate, baud rate [3]	38.4 kBaud * (COM2)						
Minimum cycle time	2.5 ms						
Process data width	16 bit						
SIO mode supported	Yes						
M-sequence capability	PREOPERATE: TYPE_0 OPERATE: TYPE_2_2 ISDU: Supported						
IO Device Description (IODD) download at: https://ioddfinder.io-link.com/#/							
Other data							
Supply voltage when applied acc. to UL specifications	9 .. 35 V DC, if PIN 2 = SP2 18 .. 35 V DC, if PIN 2 = analogue output - limited energy – acc. to 9.3 UL 61010; Class 2; UL 1310 / 1585; LPS UL 60950						
Residual ripple of supply voltage	≤ 5 %						
Current consumption	≤ 0.535 A with active switching outputs ≤ 35 mA with inactive switching outputs ≤ 55 mA with inactive switching output and analogue output						
Display	4-digit, LED, 7-segment, red, height of digits 7 mm						
Weight	~ 120 g						

Note: Overvoltage, override protection and short circuit protection are provided.
FS (**F**ull **S**cale) = relative to complete measuring range

[1] Environmental conditions acc. to 1.4.2 UL 61010-1; C22.2 No. 61010-1
[2] With mounted mating connector in corresponding protection class
[3] Connection with unshielded standard sensor line possible up to a maximum line length of 20 m.

Setting options:

All terms and symbols used for setting the EDS 3300 as well as the menu structure comply with the specifications in the VDMA Standard for pressure switches.

Setting ranges for the switching outputs:

Measuring range in bar	Lower limit of RP / FL in bar	Upper limit of SP / FH in bar
-1 .. 1	-0.98	1.00
0 .. 1	0.010	1.000
0 .. 2.5	0.025	2.500
0 .. 6	0.06	6.00
0 .. 10	0.10	10.00
0 .. 16	0.20	16.00

Measuring range in bar	Min. difference betw. RP and SP & FL and FH	Incre-ment* in bar
-1 .. 1	0.02	0.01
0 .. 1	0.010	0.002
0 .. 2.5	0.025	0.005
0 .. 6	0.06	0.01
0 .. 10	0.10	0.02
0 .. 16	0.20	0.05

* All ranges given in the table can be adjusted by the increments shown.

SP = switch point
RP = switch-back point
FL = pressure window lower value
FH = pressure window upper value

Additional functions:

- Switching mode of the switching outputs adjustable (switch point function or window function)
- Switching direction of the switching outputs adjustable (N/C or N/O function)
- Switch-on and switch-off delay adjustable from 0.00 .. 99.99 seconds
- Analogue output signal selectable 4 .. 20 mA or 0 .. 10 V
- Pressure can be displayed in bar, psi, MPa.

Pin connections:

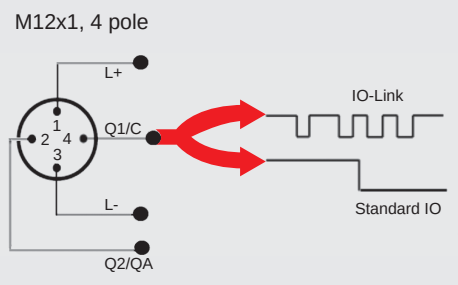

Pin	Signal	Description
1	L+	$+U_B$
2	Q2/QA	Switching output (SP2) / analogue output
3	L-	0 V
4	Q1/C	IO-Link communication / switching output (SP1)

Dimensions:

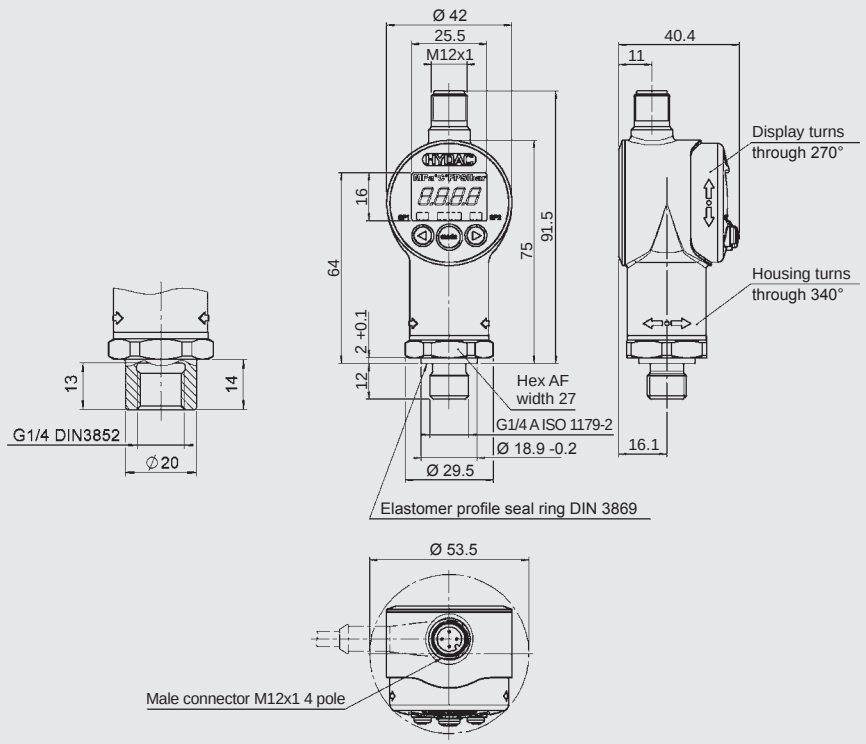

Model code:

EDS 3 3 X 6 – F31 – XXXX – 000 – X 1

Mechanical connection
4 = G1/4 A ISO 1179-2
9 = threaded port DIN 3852-G1/4

Electrical connection
6 = male M12x1, 4 pole (mating connector not supplied)

Output
F31 = IO-Link interface

Measuring ranges in bar
0001 (-1 .. 1 bar); 01.0; 02.5; 06.0; 0010; 0016

Modification number
000 = standard

Seal material (parts in contact with fluid)
F = FKM seal (e.g. for hydraulic oils)
E = EPDM seal (e.g. for water, refrigerants)

Connection material (parts in contact with fluid)
1 = stainless steel

Accessories:
Appropriate accessories, such as mating connectors, mechanical adapters, splash guards, clamps for wall-mounting and programming units, can be found in the Accessories brochure.

Note:

The information in this brochure relates to the operating conditions and applications described.

For applications or operating conditions not described, please contact the relevant technical department.

Subject to technical modifications.

HYDAC ELECTRONIC GMBH
Hauptstraße 27, 66128 Saarbrücken
Germany
Telephone +49 (0)6897 509-01
Fax +49 (0)6897 509-1726
E-mail: electronic@hydac.com
Internet: www.hydac.com

Pressure Switch EDS 3400

Relative pressure | **Display**

IO-Link

Description:

The EDS 3400 with IO-Link communication interface is a compact electronic pressure switch with integrated digital display for relative pressure measurement in the high-pressure range.

The instrument has a switching output and an additional output that can be configured as switching or analogue output (4 .. 20 mA or 0 .. 10 V).

IO-Link is the communication between the sensor/actuator (IO-Link device) and an IO-Link master based on a point-to-point interface.

The advantages:
Process data, parameters and diagnostic information of the pressure switch can be transmitted via a standard cable (SDCI mode). The integrated LED display provides information on the operating mode and the switching statuses.

Simple exchange, the IO-Link master saves the parameters of the connected pressure switch and transmits them to the newly connected pressure transmitter when replaced. Thus, time-consuming new parameterisations will no longer be required.

If IO-Link is not used, the sensor still functions as a pressure switch with two switching outputs (SIO mode).

To create customer-specific small series or to duplicate sensor settings across the system, the sensor can also be easily adjusted outside the system to suit the particular application, with the HYDAC Programming Device HPG P1-000, the HYDAC Programming Adapter ZBE P1-000 or by means of the Portable Data Recorder HMG 4000.

Typical fields of application for EDS 3400 IO-Link are machine tools, handling and assembly automation, intralogistics or the packaging industry.

Technical data:

Input data							
Measuring ranges [1]	bar	40	100	250	400	600	1000
Overload pressures	bar	80	200	500	800	1000	1600
Burst pressure	bar	200	500	1000	2000	2000	3000
Mechanical connection	See model code						
Tightening torque, recommended	20 Nm						
Parts in contact with fluid	Mech. connection: Stainless steel Seal: FKM						
Output data							
Switching outputs	PNP transistor outputs Switching current: max. 250 mA per switching output						
Analogue output, permitted load resistance	Selectable: 4 .. 20 mA load resist. max. 500 Ω 0 .. 10 V load resist. min. 1 kΩ						
Accuracy acc. to DIN 16086, terminal based	≤ ± 0.5 % FS typ. ≤ ± 1 % FS max.						
Temperature compensation, zero point	≤ ± 0.015 % FS / °C typ. ≤ ± 0.025 % FS / °C max.						
Temperature compensation, span	≤ ± 0.015 % FS / °C typ. ≤ ± 0.025 % FS / °C max.						
Repeatability	≤ ± 0.25 % FS max.						
Reaction time	< 10 ms						
Long-term drift	≤ ± 0.3 % FS typ. / year						
Environmental conditions							
Compensated temperature range	-10 .. +70 °C						
Operating temperature range	-25 .. +80 °C (-25 .. +60 °C for UL spec.)						
Storage temperature range	-40 .. +80 °C						
Fluid temperature range	-25 .. +80 °C						
CE mark	EN 61000-6-1 / 2 / 3 / 4						
c UL us mark [2]	Certificate-No.: E318391						
Vibration resistance acc. to DIN EN 60068-2-6 (0 .. 500 Hz)	≤ 10 g						
Shock resistance acc. to DIN EN 60068-2-27 (11 ms)	≤ 50 g						
Protection class acc. to DIN EN 60529 [3]	IP 67						
IO-Link specific data							
IO-Link revision	V1.1 / support V1.0						
Transmission rate, baud rate [4]	38.4 kBaud * (COM2)						
Minimum cycle time	2.5 ms						
Process data width	16 bit						
SIO mode supported	Yes						
M-sequence capability	PREOPERATE: TYPE_0 OPERATE: TYPE_2_2 ISDU: Supported						
IO Device Description (IODD) download at: https://ioddfinder.io-link.com/#/							
Other data							
Supply voltage when applied acc. to UL specifications	9 .. 35 V DC, if PIN 2 = SP2 18 .. 35 V DC, if PIN 2 = analogue output - limited energy – acc. to 9.3 UL 61010; Class 2; UL 1310 / 1585; LPS UL 60950						
Residual ripple of supply voltage	≤ 5 %						
Current consumption	≤ 0.535 A with active switching outputs ≤ 35 mA with inactive switching outputs ≤ 55 mA with inactive switching output and analogue output						
Display	4-digit, LED, 7-segment, red, height of digits 7 mm						
Weight	~ 120 g						

Note: Overvoltage, override protection and short circuit protection are provided.
FS (**F**ull **S**cale) = relative to complete measuring range

[1] 1000 bar only with mechanical connection G 1/4 A ISO 1179-2
[2] Environmental conditions acc. to 1.4.2 UL 61010-1; C22.2 No. 61010-1
[3] With mounted mating connector in corresponding protection class
[4] Connection with unshielded standard sensor line possible up to a maximum line length of 20 m.

Setting options:

All terms and symbols used for setting the EDS 3400 as well as the menu structure comply with the specifications in the VDMA Standard for pressure switches.

Setting ranges for the switching outputs:

Measuring range in bar	Lower limit of RP / FL in bar	Upper limit of SP / FH in bar
0 .. 40	0.4	40.0
0 .. 100	1.0	100.0
0 .. 250	2.5	250.0
0 .. 400	4	400.0
0 .. 600	6	600.0
0 .. 1000	10	1000.0

Measuring range in bar	Min. difference betw. RP and SP & FL and FH	Incre-ment* in bar
0 .. 40	0.4	0.1
0 .. 100	1.0	0.2
0 .. 250	2.5	0.5
0 .. 400	4	1
0 .. 600	6	1
0 .. 1000	10	2

* All ranges given in the table can be adjusted by the increments shown.

SP = switch point
RP = switch-back point
FL = pressure window lower value
FH = pressure window upper value

Additional functions:

- Switching mode of the switching outputs adjustable (switch point function or window function)
- Switching direction of the switching outputs adjustable (N/C or N/O function)
- Switch-on and switch-off delay adjustable from 0.00 .. 99.99 seconds
- Analogue output signal selectable 4 .. 20 mA or 0 .. 10 V
- Pressure can be displayed in bar, psi, MPa.

Pin connections:

M12x1, 4 pole

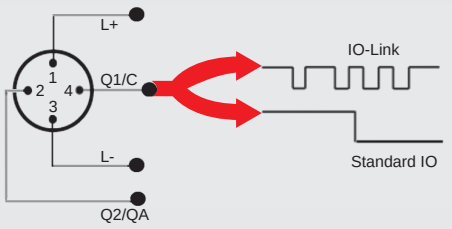

Pin	Signal	Description
1	L+	$+U_B$
2	Q2/QA	Switching output (SP2) / analogue output
3	L-	0 V
4	Q1/C	IO-Link communication / switching output (SP1)

Dimensions:

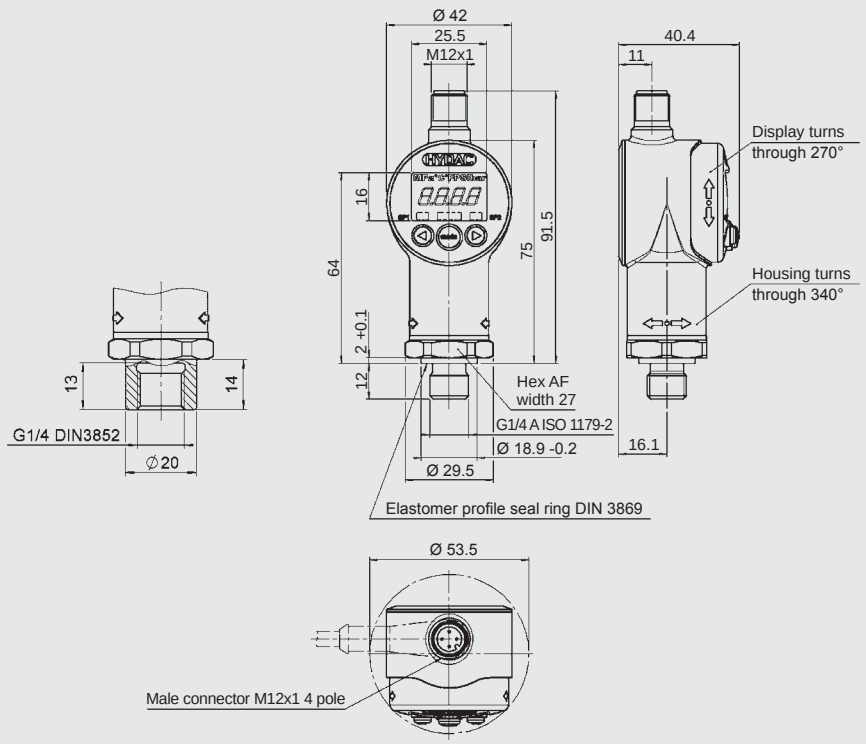

Model code:

EDS 3 4 X 6 – F31 – XXXX – 000

Mechanical connection
4 = G1/4 A ISO 1179-2
9 = threaded port DIN 3852-G1/4

Electrical connection
6 = male M12x1, 4 pole
(mating connector not supplied)

Output
F31 = IO-Link interface

Measuring ranges in bar
0040; 0100; 0250; 0400; 0600
1000 (only with mechanical connection code "4")

Modification number
000 = standard

Accessories:
Appropriate accessories, such as mating connectors, mechanical adapters, splash guards, clamps for wall-mounting and programming units, can be found in the Accessories brochure.

Note:

The information in this brochure relates to the operating conditions and applications described.

For applications or operating conditions not described, please contact the relevant technical department.

Subject to technical modifications.

HYDAC ELECTRONIC GMBH
Hauptstraße 27, 66128 Saarbrücken
Germany
Telephone +49 (0)6897 509-01
Fax +49 (0)6897 509-1726
E-mail: electronic@hydac.com
Internet: www.hydac.com

Pressure Switch EDS 820

Relative pressure | **Status display**

IO-Link

IO-Link

Description:

IO-Link is the communication between the sensor/actuator (IO-Link device) and an IO-Link master based on a point-to-point interface. This technology has been integrated into the pressure switch series EDS 820.

The advantages:
Process data, parameters and diagnostic information of the pressure switch can be transmitted via a standard cable (SDCI mode). An integrated LED display provides information on the operating mode and the switching statuses.

Simple exchange – the IO-Link master saves the parameters of the connected pressure switch and transmits them to the newly connected pressure transmitter when replaced. Thus, time-consuming new parameterisations will no longer be required.

If IO-Link is not used, the sensor functions as a pressure switch with two switching outputs (SIO mode).

To create customer-specific small series or to duplicate sensor settings across the system, the sensor can also be easily adjusted outside the system to suit the particular application, with the HYDAC Programming Device HPG P1-000, the HYDAC Programming Adapter ZBE P1-000 or by means of the Portable Data Recorder HMG 4000.

Typical fields of application are machine tools, handling and assembly automation, intralogistics or the packaging industry.

Technical data:

Input data									
Measuring ranges	bar	16	25	40	60	100	250	400	600
Overload pressures	bar	32	50	80	120	200	500	800	1000
Burst pressure	bar	80	100	200	300	500	1250	2000	2000

Mechanical connection	G 1/4 A ISO 1179-2 with 0.5 mm orifice
Tightening torque, recommended	20 Nm
Parts in contact with fluid	Mech. connection: Stainless steel Seal: FKM
Output data	
Switching outputs	PNP transistor outputs Switching current: max. 250 mA each switching output
Accuracy acc. to DIN 16086, terminal based	≤ ± 0.5 % FS typ. ≤ ± 1.0 % FS max.
Temperature compensation, zero point	≤ ±0.02 % FS / °C typ. ≤ ±0.03 % FS / °C max.
Temperature compensation, span	≤ ±0.02 % FS / °C typ. ≤ ±0.03 % FS / °C max.
Repeatability	≤ ± 0.1 % FS max.
Reaction time	< 10 ms
Long-term drift	≤ ± 0.3 % FS typ. / year
Environmental conditions	
Compensated temperature range	-25 .. +85 °C
Operating temperature range[1]	-40 .. +85 °C / -25 .. +85 °C
Storage temperature range	-40 .. +100 °C
Fluid temperature range[1]	-40 .. +125 °C / -25 .. +125 °C
CE mark	EN 61000-6-1 / 2 / 3 / 4
Vibration resistance acc. to DIN EN 60068-2-6 at 10 .. 500 Hz	≤ 25 g
Shock resistance acc. to DIN EN 60068-2-27 (11 ms)	≤ 50 g
Protection class acc. to DIN EN 60529[3]	IP 67
IO-Link specific data	
IO-Link revision	V1.1 / support V1.0
Transmission rate, baud rate[2]	38.4 kBaud (COM2)
Minimum cycle time	2.5 ms
Process data width	16 bit
SIO mode supported	Yes
M-sequence capability	PREOPERATE = TYPE_0 OPERATE = TYPE_2_2 ISDU supported
IO Device Description (IODD) download at: https://ioddfinder.io-link.com/#/	
Other data	
Supply voltage	10 .. 32 V DC
Residual ripple of supply voltage	≤ 5 %
Power consumption	≤ 1 W without active outputs
Weight	~ 65 g

Note: Reverse polarity protection of the supply voltage, overvoltage, override and short circuit protection are provided.
FS (**F**ull **S**cale) = relative to complete measuring range

[1] -25 °C with FKM seal, -40 °C on request
[2] Connection with unshielded standard sensor line possible up to a maximum line length of 20 m.
[3] With mounted mating connector in corresponding protection class

Setting options:

The EDS 820 IO-Link has 2 switching outputs whose switching characteristics are parameterisable.

Setting ranges for the switching outputs:

Measuring range in bar	Lower limit of RP / FL in bar	Upper limit of SP / FH in bar
0 .. 16	0.15	16.00
0 .. 25	0.25	25.00
0 .. 40	0.4	40.0
0 .. 100	1.0	100.0
0 .. 250	2.5	250.0
0 .. 400	4	400
0 .. 600	6	600

Measuring range in bar	Min. difference betw. RP and SP & FL and FH	Incre-ment* in bar
0 .. 16	0.15	0.05
0 .. 25	0.25	0.05
0 .. 40	0.4	0.1
0 .. 100	1.0	0.2
0 .. 250	2.5	0.5
0 .. 400	4	1
0 .. 600	6	1

* All ranges given in the table can be adjusted by the increments shown.
SP = switch point
RP = switch-back point
FL = pressure window lower value
FH = pressure window upper value

Pin connections:

M12x1, 4 pole

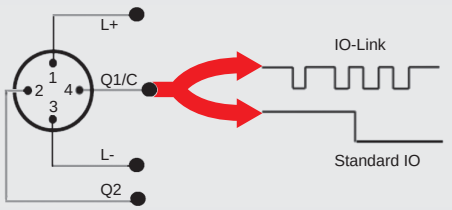

Pin	Signal	Description
1	L+	$+U_B$
2	Q2	Switching output (SP2)
3	L-	0 V
4	Q1/C	IO-Link communication / switching output (SP1)

Status LEDs:

The pressure switch provides three status LEDs at the electrical connection:

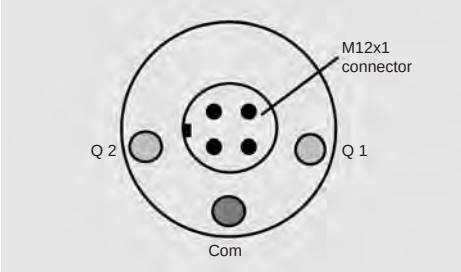

LED 1 (Q 1)	Yellow	Switching output 1 active (high)
LED 2 (Q 2)	Yellow	Switching output 2 active (high)
LED 3 (Com)	Green, continuous	Switch in SIO mode
	Green, flashing	Switch in IO-Link mode (SDCI)

Dimensions:

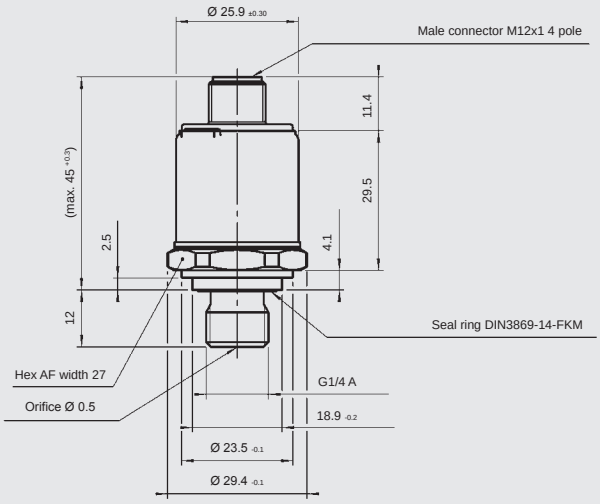

Model code:

EDS 8 2 4 – F31 – XXXX – 000

Mechanical connection
4 = G 1/4 A ISO 1179-2

Output
F31 = IO-Link interface

Measuring ranges in bar
0016; 0025; 0040; 0060; 0100; 0250; 0400; 0600

Modification number
000 = standard

Accessories:
Appropriate accessories, such as mating connectors and programming units, can be found in the Accessories brochure.

Note:

The information in this brochure relates to the operating conditions and applications described.

For applications or operating conditions not described, please contact the relevant technical department.

Subject to technical modifications.

HYDAC ELECTRONIC GMBH
Hauptstr. 27, 66128 Saarbrücken
Germany
Telephone +49 (0)6897 509-01
Fax +49 (0)6897 509-1726
e-mail: electronic@hydac.com
Internet: www.hydac.com

Pressure Switch EDS 3100

Absolute pressure | **Display**

Up to 2 switching outputs
Analogue output

Description:

The EDS 3100 is a compact electronic pressure switch with integrated digital display for absolute pressure measurement in the low pressure range.

It has a ceramic measurement cell with thick-layer strain gauge. Depending on the particular version, the instrument can have one or two switching outputs, and there is the option of an additional switchable analogue output signal (4 .. 20 mA or 0 .. 10 V).

A special design feature of the EDS 3100 is that the display can be moved in two planes. The device can be installed in almost any mounting position and the display can be turned to the optimum position without the usual additional expense of a mechanical adapter.

The 4-digit display can indicate the pressure in bar, psi or MPa. The user can select the particular measurement unit. When changing to a different measurement unit, the device automatically converts all the switching settings to the new unit of measurement.

The EDS 3100 is also available in a variant with menu navigation in accordance with VDMA.

The main applications of the EDS 3100 are primarily in low-pressure ranges in hydraulics and pneumatics, as well as in refrigeration and air conditioning technology.

Technical data:

Input data			
Measuring ranges	bar	1	2.5
Overload pressures	bar	3	8
Burst pressure	bar	5	12
Mechanical connection	See model code		
Tightening torque, recommended	20 Nm (G1/4); 45 Nm (G1/2)		
Parts in contact with fluid	Mech. connection: Stainless steel Sensor cell: Ceramic Seal: Copper (G1/2) / FKM / EPDM (as per model code)		
Output data			
Switching outputs	1 or 2 PNP transistor outputs Switching current: max. 1.2 A per output Switching cycles: > 100 million		
Analogue output, permitted load resistance	Selectable: 4 .. 20 mA load resist. max. 500 Ω 0 .. 10 V load resist. min. 1 kΩ		
Accuracy acc. to DIN 16086, terminal based	≤ ± 0.5 % FS typ. ≤ ± 1 % FS max.		
Temperature compensation, zero point	≤ ± 0.015 % FS / °C typ. ≤ ± 0.025 % FS / °C max.		
Temperature compensation, span	≤ ± 0.015 % FS / °C typ. ≤ ± 0.025 % FS / °C max.		
Repeatability	≤ ± 0.25 % FS max.		
Reaction time	< 10 ms		
Long-term drift	≤ ± 0.3 % FS typ. / year		
Environmental conditions			
Compensated temperature range	-10 .. +70 °C		
Operating temperature range	-25 .. +80 °C (-25 .. +60 °C for UL spec.)		
Storage temperature range	-40 .. +80 °C		
Fluid temperature range	-25 .. +80 °C		
CE mark	EN 61000-6-1 / 2 / 3 / 4		
c UL us mark [1]	Certificate no.: E318391		
Vibration resistance acc. to DIN EN 60068-2-6 at 10 .. 500 Hz	≤ 10 g		
Shock resistance acc. to DIN EN 60068-2-27 (11 ms)	≤ 50 g		
Protection class acc. to DIN EN 60529 [2]	IP 67		
Other data			
Supply voltage	9 .. 35 V DC without analogue output 18 .. 35 V DC with analogue output		
when applied acc. to UL specifications	– limited energy – acc. to 9.3 UL 61010; Class 2; UL 1310/1585; LPS UL 60950		
Residual ripple of supply voltage	≤ 5 %		
Current consumption	max. 2.455 A total max. 35 mA with inactive switching output max. 55 mA with inactive switching output and analogue output		
Display	4-digit, LED, 7 segment, red, height of digits 7 mm		
Weight	~ 120 g		

Note: Overvoltage, override, short circuit protection are provided
FS (**F**ull **S**cale) = relative to complete measuring range
[1] Environmental conditions acc. to 1.4.2 UL 61010-1; C22.2 No 61010-1
[2] With mounted mating connector in corresponding protection class

Setting options, standard design:

All settings offered by the EDS 3100 are grouped in 2 easy-to-navigate menus.
In order to prevent unauthorised adjustment of the device, a programming lock can be set.

Setting ranges for the switching outputs:

Switch point function

Meas. range in bar	Switch point in bar	Hysteresis in bar	Incre-ment* in bar
0 .. 1	0.016 .. 1	0.006 .. 0.99	0.002
0 .. 2.5	0.04 .. 2.5	0.015 .. 2.475	0.005

Window function

Meas. range in bar	Lower switch value in bar	Upper switch value in bar	Incre-ment* in bar
0 .. 1	0.016 .. 0.982	0.024 .. 0.99	0.002
0 .. 2.5	0.04 .. 2.455	0.06 .. 2.475	0.005

* All ranges given in the table can be adjusted by the increments shown.

Setting options menu navigation acc. to VDMA:

All terms and symbols used for setting the EDS 3100 as well as the menu structure comply with the specifications in the VDMA Standard (VDMA 24574-1) for pressure switches.

The EDS 3100 can easily be adjusted via three buttons.

Setting ranges for the switching outputs:

Measuring range in bar	Lower limit of RP / FL in bar	Upper limit of SP / FH in bar
0 .. 1	0.010	1.000
0 .. 2.5	0.025	2.500

Measuring range in bar	Min. difference betw. RP and SP & FL and FH	Incre-ment* in bar
0 .. 1	0.010	0.002
0 .. 2.5	0.025	0.005

* All ranges given in the table can be adjusted by the increments shown.

SP = switch point
RP = switch-back point
FL = pressure window lower value
FH = pressure window upper value

Additional functions:

- Switching mode of the switching outputs adjustable (switch point function or window function)
- Switching direction of the switching outputs adjustable (N/C or N/O function)
- Switch-on and switch-off delay adjustable from 0.00 .. 99.99 seconds
- Analogue output signal selectable 4 .. 20 mA or 0 .. 10 V
- Pressure can be displayed in measurement units bar, psi, MPa. The scaling can also be adapted to indicate force, weight, etc.

Additionally in the standard design:

- Choice of display (actual pressure, peak value, switch point 1, switch point 2, display off)
- Display filter for smoothing the display value during pressure pulsations

Pin connections:

M12x1, 4 pole

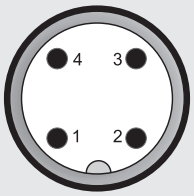

Pin	EDS 31X6-1	EDS 31X6-2	EDS 31X6-3
1	$+U_B$	$+U_B$	$+U_B$
2	n.c.	SP2	Analogue
3	0 V	0 V	0 V
4	SP1	SP1	SP1

M12x1, 5 pole

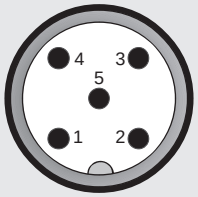

Pin	EDS 31X8-5
1	$+U_B$
2	Analogue
3	0 V
4	SP1
5	SP2

Dimensions:

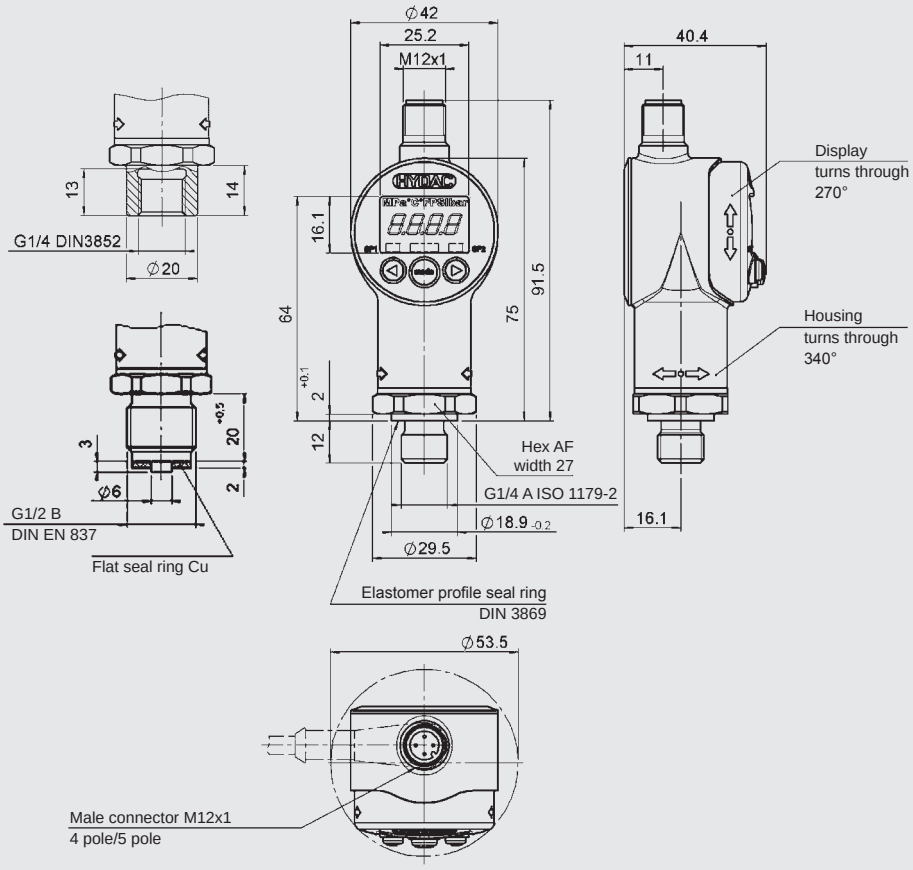

Model code:

EDS 3 1 X X – X – XXXX – X00 – X 1

Mechanical connection
1 = G1/2 B DIN-EN 837
only for modification "000"
4 = G1/4 A ISO 1179-2
9 = threaded port DIN 3852-G1/4

Electrical connection
6 = male M12x1, 4 pole
only possible on output models "1", "2" and "3"
8 = male M12x1, 5 pole
only possible on output model "5" and modification "000"

Output
1 = 1 switching output
only in conjunction with electrical connection type "6"
2 = 2 switching outputs
only in conjunction with electrical connection type "6"
3 = 1 switching output and 1 analogue output
only in conjunction with electrical connection type "6"
5 = 2 switching outputs and 1 analogue output
only in conjunction with electrical connection type "8"
and modification "000"

Measuring ranges in bar
01.0; 02.5

Modification number
000 = standard
V00 = menu navigation acc. to VDMA (standard sheet 24574)

Seal material (in contact with fluid)
F = FKM seal (e.g. for hydraulic oils)
E = EPDM seal (e.g. for water, refrigerants)

Connection material(in contact with fluid)
1 = stainless steel

Accessories:
Appropriate accessories, such as mating connectors, can be found in the Accessories brochure.

Note:

The information in this brochure relates to the operating conditions and applications described.

For applications or operating conditions not described, please contact the relevant technical department.

Subject to technical modifications.

HYDAC ELECTRONIC GMBH
Hauptstraße 27, 66128 Saarbrücken
Germany
Telephone +49 (0)6897 509-01
Fax +49 (0)6897 509-1726
E-mail: electronic@hydac.com
Internet: www.hydac.com

Pressure Switch EDS 3100

Absolute pressure | **Display**

IO-Link

IO-Link

Description:

The EDS 3100 with IO-Link communication interface is a compact electronic pressure switch with integrated digital display for absolute pressure measurement in the low pressure range.

The instrument has a switching output and an additional output that can be configured as switching or analogue output (4 .. 20 mA or 0 .. 10 V).

IO-Link is the communication between the sensor/actuator (IO-Link device) and an IO-Link master based on a point-to-point interface.

The advantages:
Process data, parameters and diagnostic information of the pressure switch can be transmitted via a standard cable (SDCI mode). The integrated LED display provides information on the operating mode and the switching statuses.

Simple exchange, the IO-Link master saves the parameters of the connected pressure switch and transmits them to the newly connected pressure transmitter when replaced. Thus, time-consuming new parameterisations will no longer be required.

If IO-Link is not used, the sensor still functions as a pressure switch with two switching outputs (SIO mode).

To create customer-specific small series or to duplicate sensor settings across the system, the sensor can also be easily adjusted outside the system to suit the particular application, with the HYDAC Programming Device HPG P1-000, the HYDAC Programming Adapter ZBE P1-000 or by means of the Portable Data Recorder HMG 4000.

Typical fields of application for EDS 3100 IO-Link are machine tools, handling and assembly automation, intralogistics or the packaging industry.

Technical data:

Input data			
Measuring ranges	bar	1	2.5
Overload pressures	bar	3	8
Burst pressure	bar	5	12
Mechanical connection	G1/4 A ISO 1179-2 Threaded port DIN 3852-G1/4		
Tightening torque, recommended	20 Nm		
Parts in contact with fluid	Mech. connection: Stainless steel Sensor cell: Ceramic Seal: FKM / EPDM (as per model code)		
Output data			
Switching outputs	PNP transistor outputs Switching current: max. 250 mA per switching output		
Analogue output, permitted load resistance	Selectable: 4 .. 20 mA load resist. max. 500 Ω 0 .. 10 V load resist. min. 1 kΩ		
Accuracy acc. to DIN 16086, terminal based	≤ ± 0.5 % FS typ. ≤ ± 1 % FS max.		
Temperature compensation, zero point	≤ ± 0.015 % FS / °C typ. ≤ ± 0.025 % FS / °C max.		
Temperature compensation, span	≤ ± 0.015 % FS / °C typ. ≤ ± 0.025 % FS / °C max.		
Repeatability	≤ ± 0.25 % FS max.		
Reaction time	< 10 ms		
Long-term drift	≤ ± 0.3 % FS typ. / year		
Environmental conditions			
Compensated temperature range	-10 .. +70 °C		
Operating temperature range	-25 .. +80 °C (-25 .. +60 °C for UL spec.)		
Storage temperature range	-40 .. +80 °C		
Fluid temperature range	-25 .. +80 °C		
CE mark	EN 61000-6-1 / 2 / 3 / 4		
cULus mark [1]	Certificate-No.: E318391		
Vibration resistance acc. to DIN EN 60068-2-6 (0 .. 500 Hz)	≤ 10 g		
Shock resistance acc. to DIN EN 60068-2-27 (11 ms)	≤ 50 g		
Protection class acc. to DIN EN 60529 [2]	IP 67		
IO-Link specific data			
IO-Link revision	V1.1 / support V1.0		
Transmission rate, baud rate [3]	38.4 kBaud * (COM2)		
Minimum cycle time	2.5 ms		
Process data width	16 bit		
SIO mode supported	Yes		
M-sequence capability	PREOPERATE: TYPE_0 OPERATE: TYPE_2_2 ISDU: Supported		
IO Device Description (IODD) download at: https://ioddfinder.io-link.com/#/			
Other data			
Supply voltage when applied acc. to UL specifications	9 .. 35 V DC, if PIN 2 = SP2 18 .. 35 V DC, if PIN 2 = analogue output - limited energy – acc. to 9.3 UL 61010; Class 2; UL 1310 / 1585; LPS UL 60950		
Residual ripple of supply voltage	≤ 5 %		
Current consumption	≤ 0.535 A with active switching outputs ≤ 35 mA with inactive switching outputs ≤ 55 mA with inactive switching output and analogue output		
Display	4-digit, LED, 7-segment, red, height of digits 7 mm		
Weight	~ 120 g		

Note: Overvoltage, override protection and short circuit protection are provided.
FS (**F**ull **S**cale) = relative to complete measuring range

[1] Environmental conditions acc. to 1.4.2 UL 61010-1; C22.2 No. 61010-1
[2] With mounted mating connector in corresponding protection class
[3] Connection with unshielded standard sensor line possible up to a maximum line length of 20 m.

Setting options:

All terms and symbols used for setting the EDS 3100 as well as the menu structure comply with the specifications in the VDMA Standard for pressure switches.

Setting ranges for the switching outputs:

Measuring range in bar	Lower limit of RP / FL in bar	Upper limit of SP / FH in bar
0 .. 1	0.010	1.000
0 .. 2.5	0.025	2.500

Measuring range in bar	Min. difference betw. RP and SP & FL and FH	Incre-ment* in bar
0 .. 1	0.010	0.002
0 .. 2.5	0.025	0.005

* All ranges given in the table can be adjusted by the increments shown.

SP = switch point
RP = switch-back point
FL = pressure window lower value
FH = pressure window upper value

Additional functions:

- Switching mode of the switching outputs adjustable (switch point function or window function)
- Switching direction of the switching outputs adjustable (N/C or N/O function)
- Switch-on and switch-off delay adjustable from 0.00 .. 99.99 seconds
- Analogue output signal selectable 4 .. 20 mA or 0 .. 10 V
- Pressure can be displayed in bar, psi, MPa

Pin connections:

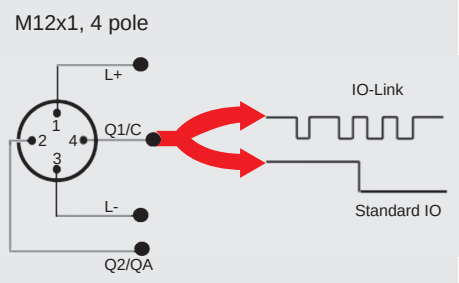

Pin	Signal	Description
1	L+	$+U_B$
2	Q2/QA	Switching output (SP2) / analogue output
3	L-	0 V
4	Q1/C	IO-Link communication / switching output (SP1)

Dimensions:

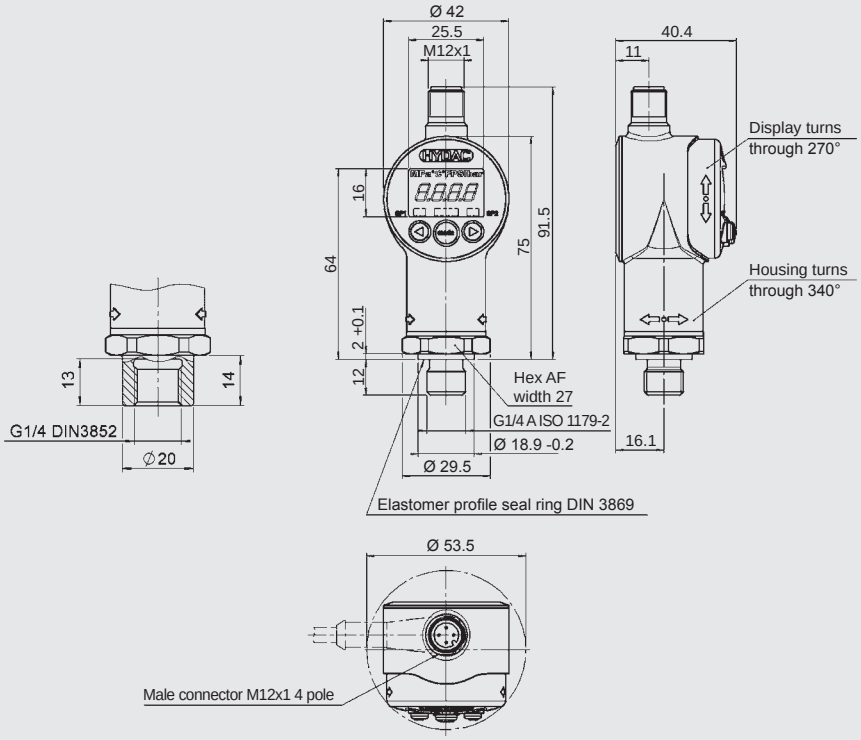

Model code:

EDS 3 1 X 6 – F31 – XXXX – 000 – X 1

Mechanical connection
4 = G1/4 A ISO 1179-2
9 = threaded port DIN 3852-G1/4

Electrical connection
6 = male M12x1, 4 pole (mating connector not supplied)

Output
F31 = IO-Link interface

Measuring ranges in bar
01.0; 02.5

Modification Number
000 = standard

Seal material (parts in contact with fluid)
F = FKM seal (e.g. for hydraulic oils)
E = EPDM seal (e.g. for water, refrigerants)

Connection material (parts in contact with fluid)
1 = stainless steel

Accessories:
Appropriate accessories, such as mating connectors, mechanical adapters, splash guards, clamps for wall-mounting and programming units, can be found in the Accessories brochure.

Note:

The information in this brochure relates to the operating conditions and applications described.

For applications or operating conditions not described, please contact the relevant technical department.

Subject to technical modifications.

HYDAC ELECTRONIC GMBH
Hauptstraße 27, 66128 Saarbrücken
Germany
Telephone +49 (0)6897 509-01
Fax +49 (0)6897 509-1726
E-mail: electronic@hydac.com
Internet: www.hydac.com

Pressure Switch
EDS 4400 Ex applications

Relative pressure | **Programmable**

Flameproof enclosure
ATEX, CSA, IECEx, triple approval
Up to 2 switching outputs

Description:

The programmable electronic pressure switch EDS 4400 with flameproof enclosure has triple approval acc. to ATEX, CSA and IECEx which ensures the instrument is universally suitable for use in potentially explosive atmospheres worldwide.

Each instrument is certified by the three approvals organizations and is labelled accordingly. Therefore there is no longer any need to stock multiple devices with separate individual approvals.

As with the industry model of the EDS 4400, those with triple approval have a proven, fully-welded sensor cell with a thin-film strain gauge on a stainless steel membrane without internal seal.

The instrument is programmed conveniently and simply using the HYDAC Programming Unit HPG 3000.

The main fields of application are in mining and the oil & gas industry, e.g. in underground vehicles, hydraulic power units, blow-out preventers (BOPs), drill drives or valve actuation stations as well as in locations with high levels of dust contamination.

Protection types and applications:

$_{c}$CSA$_{us}$

Explosionproof - Seal not required
Class I Group A, B, C, D, T6, T5
Class II Group E, F, G
Class III
Type 4

ATEX

Flameproof
I M2 Ex d I Mb
II 2G Ex d IIC T6, T5 Gb
II 2D Ex tb IIIC T110 .. 130 °C Db

IECEx

Flameproof
Ex d I Mb
Ex d IIC T6, T5 Gb
Ex tb IIIC T110 .. 130 °C Db

Technical data:

Input data										
Measuring ranges	bar	6	16	40	60	100	250	400	600	1000
Overload pressures	bar	15	32	80	120	200	500	800	1000	1600
Burst pressure	bar	100	200	200	300	500	1000	2000	2000	3000
Mechanical connection				G1/4 A ISO 1179-2						
Tightening torque, recommended				20 Nm						
Parts in contact with fluid				Stainless steel: 1.4542; 1.4571; 1.4435; 1.4404; 1.4301, 1.4548 Seal: FKM						
Conduit, housing material				1.4435; 1.4404						
Output data										
Switching output [1]				1 or 2 PNP transistor outputs: PNP Switching current: max. 1.2 A with 1 switching output max. 1 A each with 2 switching outputs Switching cycles: > 100 million Switch points/hysteresis: user-programmable with HYDAC Programming Unit HPG 3000 Switch-on and switch-off delay: 8 .. 2000 ms; User-programmable with HYDAC Programming Unit HPG 3000						
Accuracy acc. to DIN 16086, terminal based				≤ ± 0.5 % FS typ. ≤ ± 1.0 % FS max.						
Temperature compensation Zero point				≤ ± 0.02 % FS / °C typ. ≤ ± 0.03 % FS / °C max.						
Temperature compensation Span				≤ ± 0.02 % FS / °C typ. ≤ ± 0.03 % FS / °C max.						
Repeatability				≤ ± 0.1 % FS max.						
Long-term drift				≤ ± 0.3 % FS typ. / year						
Environmental conditions										
Compensated temperature range				-25 .. +85 °C						
Operating / ambient temperature range [2)3)]				T6, T110 °C: Ta = -40 .. +60 °C / -20 .. +60 °C T5: Ta = -40 .. +80 °C / -20 .. +80 °C						
Storage temperature range				-40 .. +100 °C						
Fluid temperature range [2)3)]				T6, T110 °C: Ta = -40 .. +60 °C / -20 .. +60 °C T5: Ta = -40 .. +80 °C / -20 .. +80 °C						
CE mark				EN 61000-6-1 / 2 / 3 / 4 EN 60079-0 / 1 / 31						
Vibration resistance acc. to DIN EN 60068-2-6 at 10 .. 500 Hz				≤ 10 g						
Protection class acc. to DIN EN 60529 ISO 20653				IP 65 (Vented Gauge), IP 69 (Sealed Gauge) IP 6K9K (Sealed Gauge)						
Other data										
Supply voltage				12 .. 30 V DC						
Residual ripple of supply voltage				≤ 5 %						
Current consumption				≤ 25 mA with inactive switching outputs ≤ 1.225 A with 1 switching output ≤ 2.025 A with 2 switching outputs						
Weight				~ 300 g						

Note: Reverse polarity protection of the supply voltage, overvoltage, override and short circuit protection are provided.
FS (**F**ull **S**cale) = relative to complete measuring range

[1] NPN switching outputs on request
[2] T130 °C with Ta = -40 .. +80 °C / -20 .. +80 °C with electrical connection single leads possible
[3] -20 °C with FKM seal, -40 °C on request

Setting ranges for the switching outputs:

- Switch point or upper switch value 5 % .. 100 % of the measurement range
- Hysteresis or lower switch value 1 % .. 96 % of the measurement range

Pin connections:

Conduit (single leads)

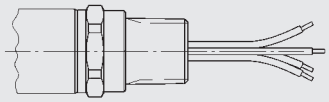

Lead	EDS 44x9-*-1P	EDS 44x9-*-2P
red	+U_B	+U_B
white	Switching output 1	Switching output 1
brown	---------	Switching output 2
black	0 V	0 V
green	SDA[1)]	SDA[1)]

Conduit (jacketed cable)

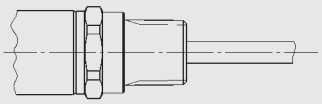

Lead	EDS 44xG-*-1P	EDS 44xG-*-2P
white	Switching output 1	Switching output 1
brown	n.c.	Switching output 2
green	SDA[1)]	SDA[1)]
yellow	0 V	0 V
grey	+U_B	+U_B

[1)] Programming line

Fields of application:

	Single leads Electrical connection "9"	Jacketed cable Electrical connection "G"
CSA	Explosionproof (seal not required)	
ATEX	Flameproof	
IECEx	Flameproof	
$_cCSA_{US}$	Class I Group A, B, C, D, T6, T5 Class II Group E, F, G Class III Type 4	
ATEX	I M2 Ex d I Mb II 2G Ex d IIC T6, T5 Gb	
	II 2D Ex tb IIIC T110 .. 130 °C Db	II 2D Ex tb IIIC T110 °C Db
IECEx	Ex d I Mb Ex d IIC T6, T5 Gb	
	Ex tb IIIC T110 .. 130 °C Db	Ex tb IIIC T110 °C Db

Model code:

EDS 4 4 X X – XXXX – X P – D X – 000 (2m)

Mechanical connection
4 = G1/4 A ISO 1179-2

Electrical connection
9 = 1/2-14 NPT Conduit (male thread), single leads
G = 1/2-14 NPT Conduit (male thread), jacketed cable

Measuring ranges in bar
0006; 0016; 0040; 0060; 0100; 0250; 0400; 0600; 1000

Number of switching outputs
1 = 1 switching output
2 = 2 switching outputs

Output technology
P = programmable

Approval
D = CSA Explosionproof - Seal not required
ATEX Flameproof
IECEx Flameproof

Type of measurement cell
S = Sealed Gauge (sealed to atmosphere) ≥ 40 bar
V = Vented Gauge (vented to atmosphere) < 40 bar

Modification number
000 = standard

Cable length in m
Standard = 2 m

Dimensions:

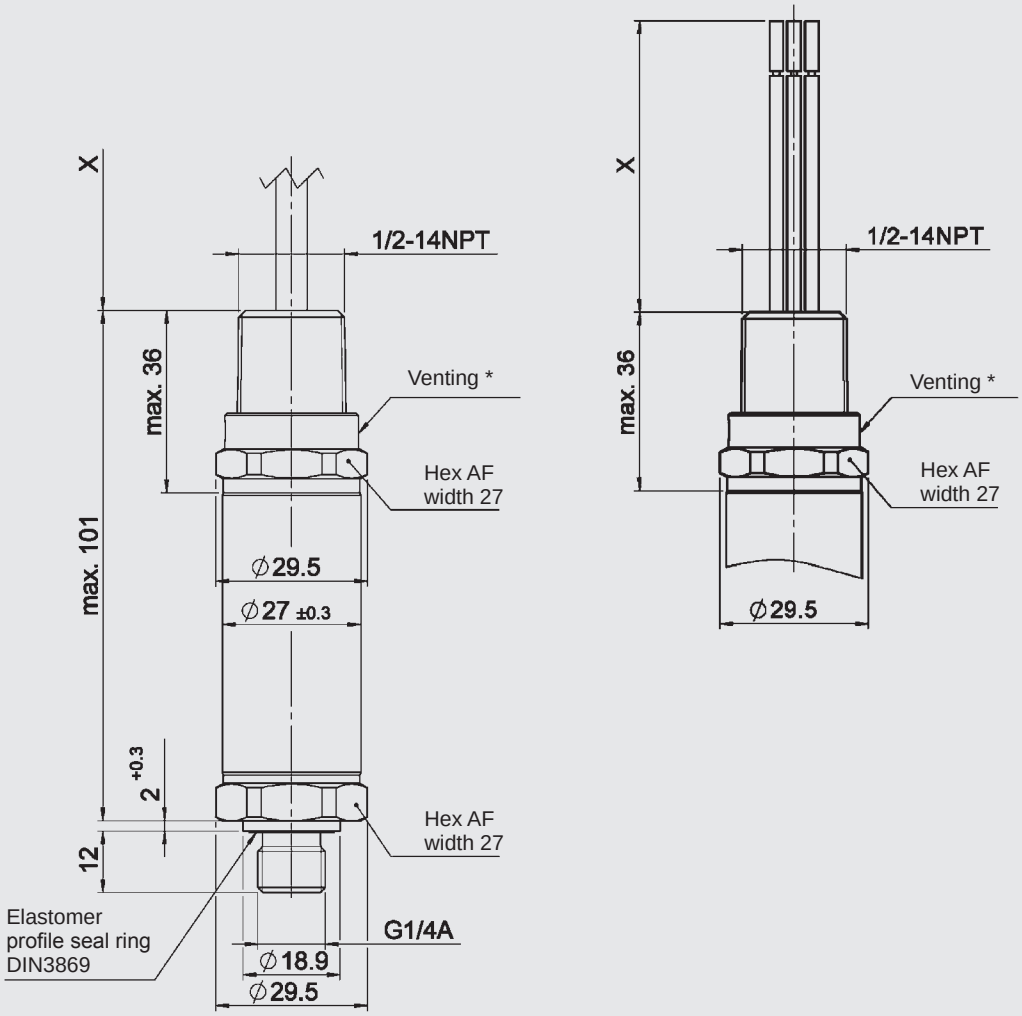

* Optional depending on type "Sealed Gauge" / "Vented Gauge"

Programming Unit:

(to be ordered separately)

HPG 3000 – 000
Portable Programming Unit
Part No. 909 422

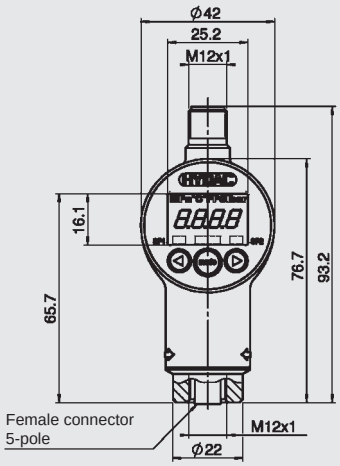

For simple connection of the pressure switch to the HPG 3000, please use the **UVM 3000 Connection Adapter** (see Accessories Brochure).

CAUTION!
The HPG 3000 Programming Unit may only be used outside the explosion risk zone.

Note:

The information in this brochure relates to the operating conditions and applications described.

For applications or operating conditions not described please contact the relevant technical department.

Subject to technical modifications.

HYDAC ELECTRONIC GMBH
Hauptstr. 27, 66128 Saarbrücken
Germany
Telephone +49 (0)6897 509-01
Fax +49 (0)6897 509-1726
e-mail: electronic@hydac.com
Internet: www.hydac.com

Pressure Switch
EDS 4400 Ex series applications

Relative pressure | **Factory-set**

Flameproof enclosure
ATEX, CSA, IECEx, triple approval
Customised designs thanks to diverse electrical and mechanical connections
Up to 2 switching outputs

Description:

The electronic pressure switch EDS 4400 with flameproof enclosure and triple approval acc. to ATEX, CSA and IECEx ensures the instrument is universally suitable for use in potentially explosive atmospheres worldwide.

Each instrument is certified by the three approvals organizations and is labelled accordingly. Therefore there is no longer any need to stock multiple devices with separate individual approvals. The switch point and switch-back point, the function of the switching outputs as N/C or N/O and the switching delay are factory-set acc. to customer requirement (not field-adjustable).

As with the industry model of the EDS 4400, those with triple approval have a proven, fully-welded sensor cell with a thin-film strain gauge on a stainless steel membrane without internal seal.

The main fields of application are in mining and the oil and gas industry, e.g. in underground vehicles, hydraulic assemblies, blow-out preventers (BOPs), drill drives or valve actuation stations and in locations with high dust contamination.

Protection types and applications:

$_{c}$CSA$_{us}$

Explosionproof - Seal not required
Class I Group A, B, C, D, T6, T5
Class II Group E, F, G
Class III
Type 4

ATEX

Flameproof
I M2 Ex d I Mb
II 2G Ex d IIC T6, T5 Gb
II 2D Ex tb IIIC T110 .. 130 °C Db

IECEx

Flameproof
Ex d I Mb
Ex d IIC T6, T5 Gb
Ex tb IIIC T110 .. 130 °C Db

Technical data:

Input data										
Measuring ranges	bar	6	16	40	60	100	250	400	600	1000
Overload pressures	bar	15	32	80	120	200	500	800	1000	1600
Burst pressure	bar	100	200	200	300	500	1000	2000	2000	3000
Mechanical connection				G1/4 A ISO 1179-2						
Tightening torque, recommended				20 Nm						
Parts in contact with fluid				Stainless steel: 1.4542; 1.4571; 1.4435; 1.4404; 1.4301, 1.4548 Seal: FKM						
Conduit, housing material				1.4435; 1.4404						
Output data										
Switching output [1]				1 or 2 PNP transistor outputs: PNP Switching current: max. 1.2 A with 1 switching output max. 1 A each with 2 switching outputs Switching cycles: > 100 million Switch points/hysteresis: acc. to customer specification Switch-on and switch-off delay: 32 ms standard (8 .. 2000 ms acc. to customer spec.)						
Accuracy acc. to DIN 16086, terminal based				≤ ± 0.5 % FS typ. ≤ ± 1.0 % FS max.						
Temperature compensation Zero point				≤ ± 0.02 % FS / °C typ. ≤ ± 0.03 % FS / °C max.						
Temperature compensation Span				≤ ± 0.02 % FS / °C typ. ≤ ± 0.03 % FS / °C max.						
Repeatability				≤ ± 0.1 % FS max.						
Long-term drift				≤ ± 0.3 % FS typ. / year						
Environmental conditions										
Compensated temperature range				-25 .. +85 °C						
Operating / ambient temperature range [2)3)]				T6, T110 °C: Ta = -40 .. +60 °C / -20 .. +60 °C T5: Ta = -40 .. +80 °C / -20 .. +80 °C						
Storage temperature range				-40 .. +100 °C						
Fluid temperature range [2)3)]				T6, T110 °C: Ta = -40 .. +60 °C / -20 .. +60 °C T5: Ta = -40 .. +80 °C / -20 .. +80 °C						
CE mark				EN 61000-6-1 / 2 / 3 / 4 EN 60079-0 / 1 / 31						
Vibration resistance acc. to DIN EN 60068-2-6 at 10 .. 500 Hz				≤ 10 g						
Protection class acc. to DIN EN 60529 ISO 20653				IP 65 (Vented Gauge), IP 69 (Sealed Gauge) IP 6K9K (Sealed Gauge)						
Other data										
Supply voltage				12 .. 30 V DC						
Residual ripple of supply voltage				≤ 5 %						
Current consumption				≤ 25 mA with inactive switching outputs ≤ 1.225 A with 1 switching output ≤ 2.025 A with 2 switching outputs						
Weight				~ 300 g						

Note: Reverse polarity protection of the supply voltage, overvoltage, override and short circuit protection are provided.
FS (**F**ull **S**cale) = relative to complete measuring range

[1)] NPN switching outputs on request
[2)] T130 °C with Ta = -40 .. +80 °C / -20 .. +80 °C with electrical connection single leads possible
[3)] -20 °C with FKM seal, -40 °C on request

Pin connections:

Pin connections are configured acc. to customer specification.

Conduit (single leads)

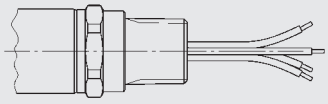

Conduit (jacketed cable)

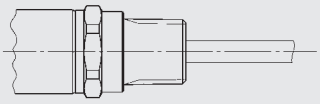

Fields of application:

	Single leads Electrical connection "9"	Jacketed cable Electrical connection "G"
CSA	Explosionproof (seal not required)	
ATEX	Flameproof	
IECEx	Flameproof	
$_{c}$CSA$_{us}$	Class I Group A, B, C, D, T6, T5 Class II Group E, F, G Class III Type 4	
ATEX	I M2 Ex d I Mb II 2G Ex d IIC T6, T5 Gb	
	II 2D Ex tb IIIC T110 .. 130 °C Db	II 2D Ex tb IIIC T110 °C Db
IECEx	Ex d I Mb Ex d IIC T6, T5 Gb	
	Ex tb IIIC T110 .. 130 °C Db	Ex tb IIIC T110 °C Db

Dimensions:

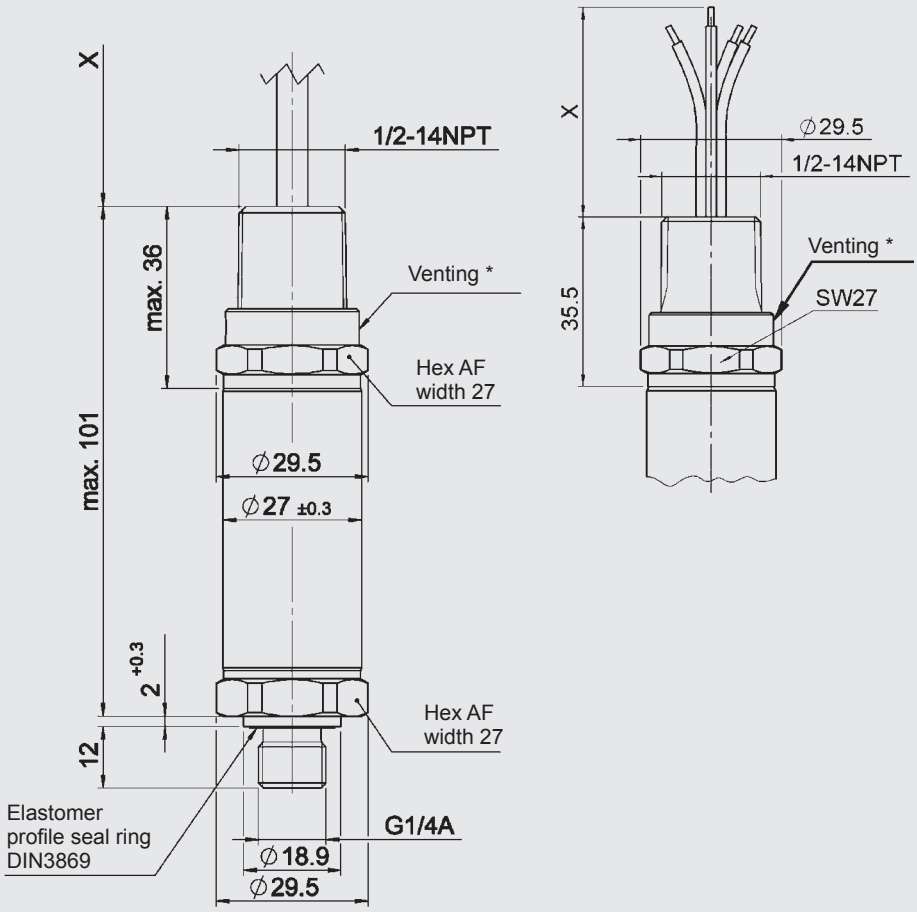

* Optional depending on type "Sealed Gauge" / "Vented Gauge"

Order details:

The electronic pressure switch EDS 4400 with triple approval has been specially developed for OEM customers and is available for minimum order quantities of 50 units per type. For precise specifications, please contact the Sales Department of HYDAC ELECTRONIC.

Note:

The information in this brochure relates to the operating conditions and applications described.

For applications or operating conditions not described please contact the relevant technical department.

Subject to technical modifications.

HYDAC ELECTRONIC GMBH
Hauptstr. 27, 66128 Saarbrücken
Germany
Telephone +49 (0)6897 509-01
Fax +49 (0)6897 509-1726
e-mail: electronic@hydac.com
Internet: www.hydac.com

Pressure Switch
EDS 4300 Ex applications

Relative pressure | **Programmable**

Intrinsically Safe
ATEX approval
1 switching output

Description:

The programmable pressure switch EDS 4300 in ATEX version was specially developed for use in potentially explosive atmospheres and is based on the EDS 4000 series.

The switch point and switch-back point, the function of the switching outputs as N/C or N/O and the switching delay are user-programmable in conjunction with the HYDAC Programming Unit HPG 3000.

As with the industry model, the programmable EDS 4300 in ATEX version has a ceramic measurement cell with thick-layer strain gauge for measuring relative pressure in the low pressure range.

The main fields of application are in the oil and gas industry, in mining and in locations with high dust contamination.

Protection types and applications:

I M1	Ex ia I		
II 1G	Ex ia	IIC	T4, T5, T6
II 1/2G	Ex ia	IIC	T4, T5, T6
II 2G	Ex ia	IIC	T4, T5, T6
II 1D	Ex iaD 20		T100 °C

Technical data:

Input data									
Measuring ranges	bar	1	2.5	4	6	10	16	25	40
Overload pressures	bar	3	8	12	20	32	50	80	120
Burst pressure	bar	5	12	18	30	48	75	120	180
Mechanical connection				G1/4 A ISO 1179-2					
Tightening torque, recommended				20 Nm					
Parts in contact with fluid				Sensor: Ceramic Mech. connection: 1.4301 Seal: FKM / EPDM (as per model code)					
Output data									
Switching output				1 transistor output: PNP Switching current: during operation: I_{max} ≤ 34 mA Switching cycles: > 100 million Switch point/hysteresis: user-programmable with HYDAC Programming Unit HPG 3000 Switch-on and switch-off delay: 8 .. 2000 ms; user-programmable with HYDAC Programming Unit HPG 3000					
Accuracy acc. to DIN 16086, terminal based				≤ ± 0.5 % FS typ. ≤ ± 1 % FS max.					
Temperature compensation Zero point				≤ ± 0.02 % FS / °C typ. ≤ ± 0.03 % FS / °C max.					
Temperature compensation Span				≤ ± 0.02 % FS / °C typ. ≤ ± 0.03 % FS / °C max.					
Repeatability				≤ ± 0.1 % FS max.					
Long-term drift				≤ ± 0.3 % FS typ. / year					
Environmental conditions									
Compensated temperature range				-25 .. +85 °C					
Operation, ambient, fluid temperature range				T6: Ta = -20 .. +60 °C T5, T4, T100: Ta = -20 .. +70 °C					
Storage temperature range				-40 .. +100 °C					
CE mark				EN 61000-6-1 / 2 / 3 / 4 EN 60079-0 / 11 / 26 EN 61241-0 / 11 EN 50303					
Vibration resistance acc. to DIN EN 60068-2-6 at 10 .. 500 Hz				≤ 20 g					
Shock resistance acc. to DIN EN 60068-2-27 (1 ms)				≤ 100 g					
Protection class acc. to DIN EN 60529 [1]				IP 67					

Relevant data for Ex applications	**I M1 II 1G, 1/2G, 2G**	**II 1 D**
Supply voltage	14 .. 28 V DC	
Max. input current	100 mA	93 mA
Max. input power	0.7 W	0.65 W
Max. internal capacity	33 nF	33 nF
Max. internal inductance	0 mH	0 mH
Insulation voltage to housing [2]	50 V AC, with integrated overvoltage protection acc. to EN 61000-6-2	
Approved intrinsic safety barriers	Pepperl & Fuchs: Z 787 Telematic Ex STOCK: MTL 7087	

Other data	
Residual ripple of supply voltage	≤ 5 %
Weight	~ 150 g

Note: Reverse polarity protection of the supply voltage, overvoltage, override and short circuit protection are provided.
FS (**F**ull **S**cale) = relative to complete measuring range

[1] With mounted mating connector in corresponding protection class
[2] 500 V AC on request

Setting options:

In conjunction with the HYDAC Programming Unit HPG 3000, all the settings are combined in an easy-to-follow menu.

Setting ranges for the switching outputs:

Measuring range in bar	Increment in bar
0 .. 1	0.002
0 .. 2.5	0.005
0 .. 4	0.01
0 .. 6	0.01
0 .. 10	0.02
0 .. 16	0.05
0 .. 25	0.1
0 .. 40	0.1

The switch point (upper switch value) on all instruments is between 5 % and 100 % of the measuring range and the switch-back point (lower switch value) is between 1 % and 96 % of the measuring range.

	Minimum value in ms	Maximum value in ms
Switch-on delay Ton1/Ton2	8	2040
Switch-off delay ToF1/ToF2	8	2040

The increment for all instruments is 8 ms.

Pin connections:

M12x1, 5 pole

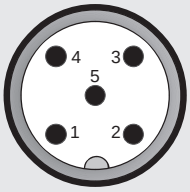

Pin	Process connection	HPG connection
1	$+U_B$	$+U_B$
2	0 V	Comport 1*
3	0 V	0 V
4	Out 1	n.c.
5	0 V	Comport 2*

* Comport = programming connection

Fields of application:

Code no. for use in model code	1	2	3	8
Protection type	I M1 Ex ia I	II 1G Ex ia IIC T4, T5, T6	II 2G Ex ia IIC II 1/2G Ex ia IIC T4, T5, T6	II 1D Ex iaD 20 T100 °C
Certificate	DEKRA EXAM BVS 07 ATEX E 041 X			
Application fields	Group I Category M1 Mining Protection type: intrinsically safe ia with barrier	Group II Category 1G Gases Protection type: intrinsically safe ia with barrier For use in Zone 0, 1, 2	Group II Category 2G, 1/2G Gases Protection type: intrinsically safe ia with barrier For use in Zone 1, 2 For mounting to Zone 0	Group II Category 1D Dusts Protection type: intrinsically safe ia with barrier For use in Zone 20, 21, 22 For mounting to Zone 20

Model code:

EDS 4 3 4 8 – XXXX – P – A N X – 000 – X 1

Mechanical connection
4 = G1/4 A ISO 1179-2

Electrical connection
8 = male M12x1, 5 pole (mating connector not supplied)

Measuring ranges in bar
01.0; 02.5; 04.0; 06.0; 0010; 0016; 0025; 0040

Output technology
P = programmable

Approval
A = ATEX

Insulation voltage
N = 50 V AC to housing

Protection types and applications (code)
1 = I M1 Ex ia I
2 = II 1G Ex ia IIC T4, T5, T6
3 = II 2G Ex ia IIC T4, T5, T6 / II 1/2G Ex ia IIC T4, T5, T6
8 = II 1D Ex iaD 20 T100 °C

Modification number
000 = standard

Sealing material (in contact with fluid)
F = FKM seal (e.g. for hydraulic oils)
E = EPDM seal (e.g. for refrigerants)

Connection material (in contact with fluid)
1 = stainless steel

Dimensions:

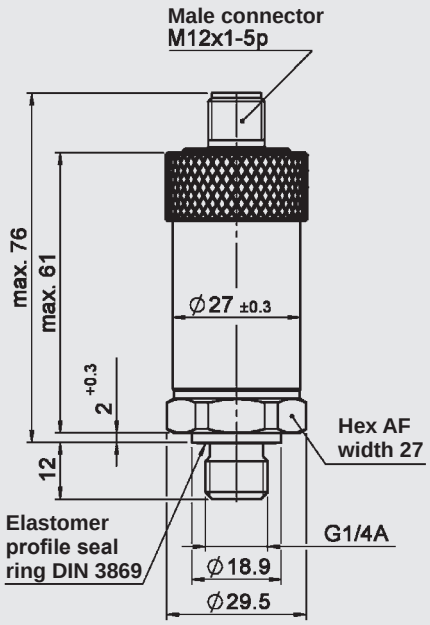

Programming Unit:

(to be ordered separately)

HPG 3000 – 000
Portable Programming Unit
Part No. 909422

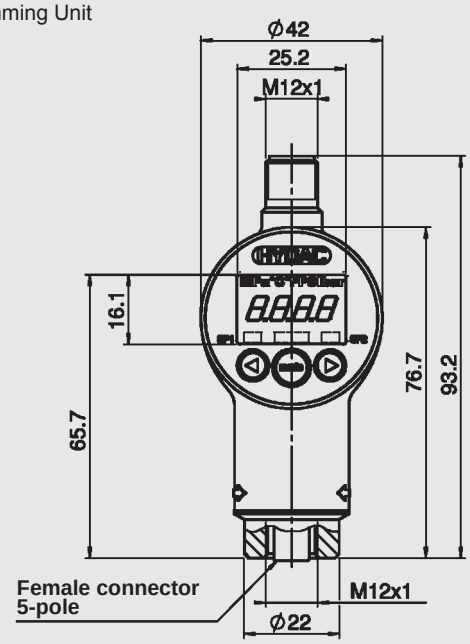

Important note:

The HPG 3000 Programming Unit may only be used outside the explosion risk zone.

Note:

The information in this brochure relates to the operating conditions and applications described.

For applications or operating conditions not described, please contact the relevant technical department.

Subject to technical modifications.

HYDAC ELECTRONIC GMBH
Hauptstr. 27, 66128 Saarbrücken
Germany
Telephone +49 (0)6897 509-01
Fax +49 (0)6897 509-1726
e-mail: electronic@hydac.com
Internet: www.hydac.com

Pressure Switch
EDS 4300 Ex series applications

Relative pressure | **Factory-set**

Intrinsically Safe
ATEX approval
Customised designs thanks to diverse electrical and mechanical connections
1 switching output

Description:

The pressure switch EDS 4300 in ATEX version has been specially developed for use in potentially explosive atmospheres and is based on the EDS 4000 series.

The switch point and switch-back point, the function of the switching outputs as N/C or N/O and the switching delay are factory-set acc. to customer requirement (not field-adjustable).

As with the industry model, the EDS 4300 in ATEX version has a ceramic measurement cell with thick-layer strain gauge for measuring relative pressure in the low pressure range.

The main fields of application are in the oil and gas industry, in mining and in locations with high dust contamination.

Protection types and applications:

I M1	Ex ia	I	
II 1G	Ex ia	IIC	T4, T5, T6
II 1/2G	Ex ia	IIC	T4, T5, T6
II 2G	Ex ia	IIC	T4, T5, T6
II 1D	Ex iaD 20		T100 °C

Technical data:

Input data									
Measuring ranges	bar	1	2.5	4	6	10	16	25	40
Overload pressures	bar	3	8	12	20	32	50	80	120
Burst pressure	bar	5	12	18	30	48	75	120	180
Mechanical connection				G1/4 A ISO 1179-2					
Tightening torque, recommended				20 Nm					
Parts in contact with fluid				Sensor: Ceramic Mech. connection: 1.4301 Seal: FKM / EPDM					
Output data									
Switching output				1 transistor output: PNP Switching current: during operation: I_{max} ≤ 34 mA Switching cycles: > 100 million Switch point/switch-back point: acc. to customer specification Switch-on and switch-off delay: 32 ms standard (8 .. 2000 ms acc. to customer spec.)					
Accuracy acc. to DIN 16086, terminal based				≤ ± 0.5 % FS typ. ≤ ± 1 % FS max.					
Temperature compensation Zero point				≤ ± 0.02 % FS / °C typ. ≤ ± 0.03 % FS / °C max.					
Temperature compensation Span				≤ ± 0.02 % FS / °C typ. ≤ ± 0.03 % FS / °C max.					
Repeatability				≤ ± 0.1 % FS					
Long-term drift				≤ ± 0.3 % FS typ. / year					
Environmental conditions									
Compensated temperature range				-25 .. +85 °C					
Operation, ambient, fluid temperature range				T6: Ta = -20 .. +60 °C T5, T4, T100: Ta = -20 .. +70 °C					
Storage temperature range				-40 .. +100 °C					
CE mark				EN 61000-6-1 / 2 / 3 / 4 EN 60079-0 / 11 / 26 EN 61241-0 / 11 EN 50303					
Vibration resistance acc. to DIN EN 60068-2-6 at 10 .. 500 Hz				≤ 20 g					
Shock resistance acc. to DIN EN 60068-2-27 (1 ms)				≤ 100 g					
Protection class acc. to DIN EN 60529 [1]				IP 67					

Relevant data for Ex applications	**I M1 II 1G, 1/2G, 2G**	**II 1 D**
Supply voltage	14 .. 28 V DC	
Max. input current	100 mA	93 mA
Max. input power	0.7 W	0.65 W
Max. internal capacity	33 nF	33 nF
Max. internal inductance	0 mH	0 mH
Insulation voltage to housing [2]	50 V AC, with integrated overvoltage protection acc. to EN 61000-6-2	
Approved intrinsic safety barriers	Pepperl & Fuchs: Z 787 Telematic Ex STOCK: MTL 7087	

Other data	
Residual ripple of supply voltage	≤ 5 %
Weight	~ 150 g

Note: Reverse polarity protection of the supply voltage, overvoltage, override and short circuit protection are provided.
FS (**F**ull **S**cale) = relative to complete measuring range

[1] With mounted mating connector in corresponding protection class
[2] 500 V AC on request

Fields of application:

Protection type	I M1 Ex ia I	II 1G Ex ia IIC T4, T5, T6	II 2G Ex ia IIC II 1/2G Ex ia IIC T4, T5, T6	II 1D Ex iaD 20 T100 °C
Certificate	DEKRA EXAM BVS 07 ATEX E 041 X			
Application fields	Group I Category M1 Mining Protection type: intrinsically safe ia with barrier	Group II Category 1G Gases Protection type: intrinsically safe ia with barrier For use in Zone 0, 1, 2	Group II Category 2G, 1/2G Gases Protection type: intrinsically safe ia with barrier For use in Zone 1, 2 For mounting to Zone 0	Group II Category 1D Dusts Protection type: intrinsically safe ia with barrier For use in Zone 20, 21, 22 For mounting to Zone 20

Dimensions:

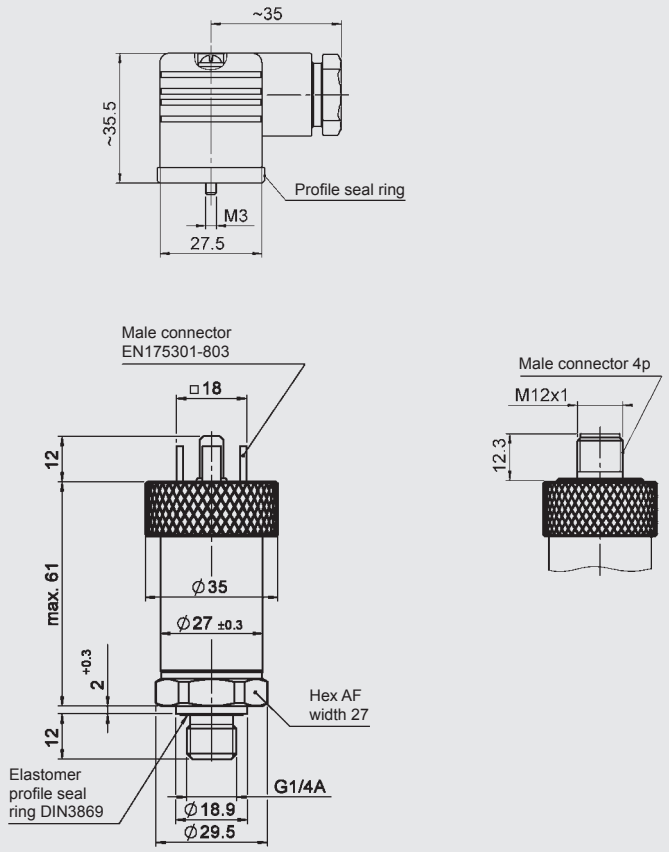

Order details:

The electronic pressure switch EDS 4300 in ATEX version has been specially developed for OEM customers and is available for minimum order quantities of 50 pieces per type. For precise specifications, please contact the Sales Department of HYDAC ELECTRONIC.

Note:

The information in this brochure relates to the operating conditions and applications described.

For applications or operating conditions not described, please contact the relevant technical department.

Subject to technical modifications.

HYDAC ELECTRONIC GMBH
Hauptstr. 27, 66128 Saarbrücken
Germany
Telephone +49 (0)6897 509-01
Fax +49 (0)6897 509-1726
e-mail: electronic@hydac.com
Internet: www.hydac.com

Pressure Switch
EDS 4400 Ex applications

Relative pressure | **Programmable**

Intrinsically Safe
ATEX approval
1 switching output

Description:

The programmable pressure switch EDS 4400 in ATEX version was specially developed for use in potentially explosive atmospheres and is based on the EDS 4000 series.

The switch point and switch-back point, the function of the switching outputs as N/C or N/O and the switching delay are user-programmable in conjunction with the HYDAC Programming Unit HPG 3000.

As with the industry model, the programmable EDS 4400 in ATEX version has a measurement cell with thin-film strain gauge on a stainless steel membrane for measuring relative pressure in the high pressure range.

The main fields of application are in the oil and gas industry, in mining and in locations with high dust contamination.

Protection types and applications:

I M1	Ex ia I		
II 1G	Ex ia	IIC	T4, T5, T6
II 1/2G	Ex ia	IIC	T4, T5, T6
II 2G	Ex ia	IIC	T4, T5, T6
II 1D	Ex iaD 20		T100 °C

Technical data:

Input data						
Measuring ranges	bar	60	100	250	400	600
Overload pressures	bar	120	200	500	800	1000
Burst pressure	bar	300	500	1000	2000	2000
Mechanical connection			G1/4 A ISO 1179-2			
Tightening torque, recommended			20 Nm			
Parts in contact with fluid			Stainless steel: 1.4542; 1.4571; 1.4435; 1.4404; 1.4301, 1.4548 Seal: FKM			
Output data						
Switching output			1 transistor output: PNP Switching current: during operation: I_{max} ≤ 34 mA Switching cycles: > 100 million Switch point/hysteresis: user-programmable with HYDAC Programming Unit HPG 3000 Switch-on and switch-off delay: 8 .. 2000 ms; user-programmable with HYDAC Programming Unit HPG 3000			
Accuracy acc. to DIN 16086, terminal based			≤ ± 0.5 % FS typ. ≤ ± 1 % FS max.			
Temperature compensation Zero point			≤ ± 0.02 % FS / °C typ. ≤ ± 0.03 % FS / °C max.			
Temperature compensation Span			≤ ± 0.02 % FS / °C typ. ≤ ± 0.03 % FS / °C max.			
Repeatability			≤ ± 0.1 % FS max.			
Long-term drift			≤ ± 0.3 % FS typ. / year			
Environmental conditions						
Compensated temperature range			-25 .. +85 °C			
Operation, ambient, fluid temperature range			T6: Ta = -20 .. +60 °C T5, T4, T100: Ta = -20 .. +70 °C			
Storage temperature range			-40 .. +100 °C			
CE mark			EN 61000-6-1 / 2 / 3 / 4 EN 60079-0 / 11 / 26 EN 61241-0 / 11 EN 50303			
Vibration resistance acc. to DIN EN 60068-2-6 at 10 .. 500 Hz			≤ 20 g			
Shock resistance acc. to DIN EN 60068-2-27 (1 ms)			≤ 100 g			
Protection class acc. to DIN EN 60529 [1]			IP 67			

Relevant data for Ex applications	**I M1 II 1G, 1/2G, 2G**	**II 1 D**
Supply voltage	14 .. 28 V DC	
Max. input current	100 mA	93 mA
Max. input power	0.7 W	0.65 W
Max. internal capacity	33 nF	33 nF
Max. internal inductance	0 mH	0 mH
Insulation voltage to housing [2]	50 V AC, with integrated overvoltage protection acc. to EN 61000-6-2	
Approved intrinsic safety barriers	Pepperl & Fuchs: Z 787 Telematic Ex STOCK: MTL 7087	

Other data	
Residual ripple of supply voltage	≤ 5 %
Weight	~ 150 g

Note: Reverse polarity protection of the supply voltage, overvoltage, override and short circuit protection are provided.
FS (**F**ull **S**cale) = relative to complete measuring range

[1] With mounted mating connector in corresponding protection class
[2] 500 V AC on request

Setting options:

In conjunction with the HYDAC Programming Unit HPG 3000, all the settings are combined in an easy-to-follow menu.

Setting ranges for the switching outputs:

Measuring range in bar	Increment in bar
0 .. 60	0.1
0 .. 100	0.2
0 .. 250	0.5
0 .. 400	1
0 .. 600	1

The switch point (upper switch value) on all instruments is between 5 % and 100 % of the measuring range and the switch-back point (lower switch value) is between 1 % and 96 % of the measuring range.

	Minimum value in ms	Maximum value in ms
Switch-on delay Ton1/Ton2	8	2040
Switch-off delay ToF1/ToF2	8	2040

The increment for all instruments is 8 ms.

Pin connections:

M12x1, 5 pole

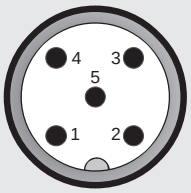

Pin	Process connection	HPG connection
1	$+U_B$	$+U_B$
2	0 V	Comport 1*
3	0 V	0 V
4	Out 1	n.c.
5	0 V	Comport 2*

* Comport = programming connection

Fields of application:

Code no. for use in model code	1	2	3	8
Protection type	I M1 Ex ia I	II 1G Ex ia IIC T4, T5, T6	II 2G Ex ia IIC II 1/2G Ex ia IIC T4, T5, T6	II 1D Ex iaD 20 T100 °C
Certificate	DEKRA EXAM BVS 07 ATEX E 041 X			
Application fields	Group I Category M1 Mining Protection type: intrinsically safe ia with barrier	Group II Category 1G Gases Protection type: intrinsically safe ia with barrier For use in Zone 0, 1, 2	Group II Category 2G, 1/2G Gases Protection type: intrinsically safe ia with barrier For use in Zone 1, 2 For mounting to Zone 0	Group II Category 1D Dusts Protection type: intrinsically safe ia with barrier For use in Zone 20, 21, 22 For mounting to Zone 20

Model code:

EDS 4 4 4 8 – XXXX – P – A N X – 000

Mechanical connection
4 = G1/4 A ISO 1179-2

Electrical connection
8 = male M12x1, 5 pole
(mating connector not supplied)

Measuring ranges in bar
0060; 0100; 0250; 0400; 0600

Output technology
P = programmable

Approval
A = ATEX

Insulation voltage
N = 50 V AC to housing

Protection types and applications (code)
1 = I M1 Ex ia I
2 = II 1G Ex ia IIC T4, T5, T6
3 = II 2G Ex ia IIC T4, T5, T6 / II 1/2G Ex ia IIC T4, T5, T6
8 = II 1D Ex iaD 20 T100 °C

Modification number
000 = standard

Dimensions:

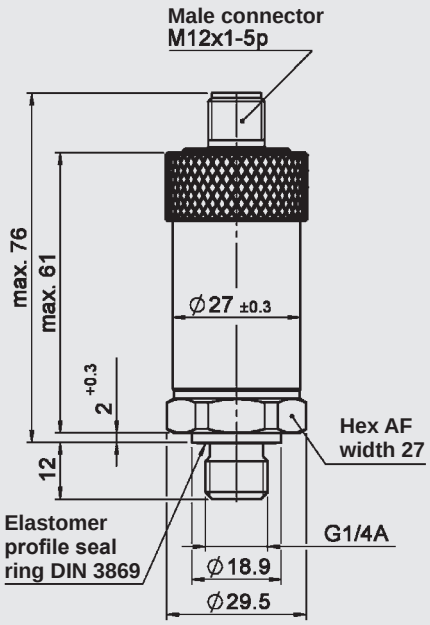

Programming Unit:

(to be ordered separately)

HPG 3000 – 000
Portable Programming Unit
Part No. 909422

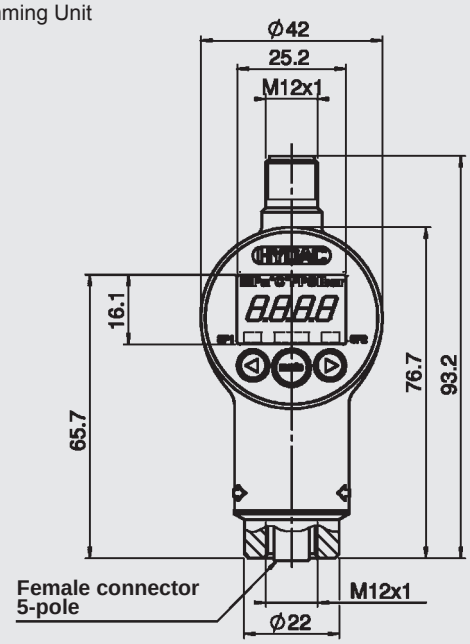

Important note:

The HPG 3000 Programming Unit may only be used outside the explosion risk zone.

Note:

The information in this brochure relates to the operating conditions and applications described.

For applications or operating conditions not described, please contact the relevant technical department.

Subject to technical modifications.

HYDAC ELECTRONIC GMBH
Hauptstraße 27, 66128 Saarbrücken
Germany
Telephone +49 (0)6897 509-01
Fax +49 (0)6897 509-1726
E-mail: electronic@hydac.com
Internet: www.hydac.com

Pressure Switch
EDS 4400 Ex series applications

Relative pressure | Factory-set

Intrinsically Safe
ATEX approval
Customised designs thanks to diverse electrical and mechanical connections
1 switching output

Description:

The pressure switch EDS 4400 in ATEX version has been specially developed for use in potentially explosive atmospheres and is based on the EDS 4000 series.

The switch point and switch-back point, the function of the switching outputs as N/C or N/O and the switching delay are factory-set acc. to customer requirement (not field-adjustable).

As with the industry model, the EDS 4400 in ATEX version has a measurement cell with thin-film strain gauge on a stainless steel membrane for measuring relative pressure in the high pressure range.

The main fields of application are in the oil and gas industry, in mining and in locations with high dust contamination.

Protection types and applications:

I M1	Ex ia	I	
II 1G	Ex ia	IIC	T4, T5, T6
II 1/2G	Ex ia	IIC	T4, T5, T6
II 2G	Ex ia	IIC	T4, T5, T6
II 1D	Ex iaD 20		T100 °C

Technical data:

Input data						
Measuring ranges	bar	60	100	250	400	600
Overload pressures	bar	120	200	500	800	1000
Burst pressure	bar	300	500	1000	2000	2000
Mechanical connection			G1/4 A ISO 1179-2			
Tightening torque, recommended			20 Nm			
Parts in contact with fluid			Stainless steel: 1.4542; 1.4571; 1.4435; 1.4404; 1.4301, 1.4548 Seal: FKM			
Output data						
Switching output			1 transistor output: PNP Switching current: during operation: I_{max} ≤ 34 mA Switching cycles: > 100 million Switch point/switch-back point: acc. to customer specification Switch-on and switch-off delay: 32 ms standard (8 .. 2000 ms acc. to customer spec.)			
Accuracy acc. to DIN 16086, terminal based			≤ ± 0.5 % FS typ. ≤ ± 1 % FS max.			
Temperature compensation Zero point			≤ ± 0.02 % FS / °C typ. ≤ ± 0.03 % FS / °C max.			
Temperature compensation Span			≤ ± 0.02 % FS / °C typ. ≤ ± 0.03 % FS / °C max.			
Repeatability			≤ ± 0.1 % FS			
Long-term drift			≤ ± 0.3 % FS typ. / year			
Environmental conditions						
Compensated temperature range			-25 .. +85 °C			
Operation, ambient, fluid temperature range			T6: Ta = -20 .. +60 °C T5, T4, T100: Ta = -20 .. +70 °C			
Storage temperature range			-40 .. +100 °C			
CE mark			EN 61000-6-1 / 2 / 3 / 4 EN 60079-0 / 11 / 26 EN 61241-0 / 11 EN 50303			
Vibration resistance acc. to DIN EN 60068-2-6 at 10 .. 500 Hz			≤ 20 g			
Shock resistance acc. to DIN EN 60068-2-27 (1 ms)			≤ 100 g			
Protection class acc. to DIN EN 60529 [1]			IP 67			
Relevant data for Ex applications						
			I M1 II 1G, 1/2G, 2G	**II 1 D**		
Supply voltage			14 .. 28 V DC			
Max. input current			100 mA	93 mA		
Max. input power			0.7 W	0.65 W		
Max. internal capacity			33 nF	33 nF		
Max. internal inductance			0 mH	0 mH		
Insulation voltage to housing [2]			50 V AC, with integrated overvoltage protection acc. to EN 61000-6-2			
Approved intrinsic safety barriers			Pepperl & Fuchs: Z 787 Telematic Ex STOCK: MTL 7087			
Other data						
Residual ripple of supply voltage			≤ 5 %			
Weight			~ 150 g			

Note: Reverse polarity protection of the supply voltage, overvoltage, override and short circuit protection are provided.
FS (**F**ull **S**cale) = relative to complete measuring range

[1] With mounted mating connector in corresponding protection class
[2] 500 V AC on request

Fields of application:

Protection type	I M1 Ex ia I	II 1G Ex ia IIC T4, T5, T6	II 2G Ex ia IIC II 1/2G Ex ia IIC T4, T5, T6	II 1D Ex iaD 20 T100 °C
Certificate	DEKRA EXAM BVS 07 ATEX E 041 X			
Application fields	Group I Category M1 Mining Protection type: intrinsically safe ia with barrier	Group II Category 1G Gases Protection type: intrinsically safe ia with barrier For use in Zone 0, 1, 2	Group II Category 2G, 1/2G Gases Protection type: intrinsically safe ia with barrier For use in Zone 1, 2 For mounting to Zone 0	Group II Category 1D Dusts Protection type: intrinsically safe ia with barrier For use in Zone 20, 21, 22 For mounting to Zone 20

Dimensions:

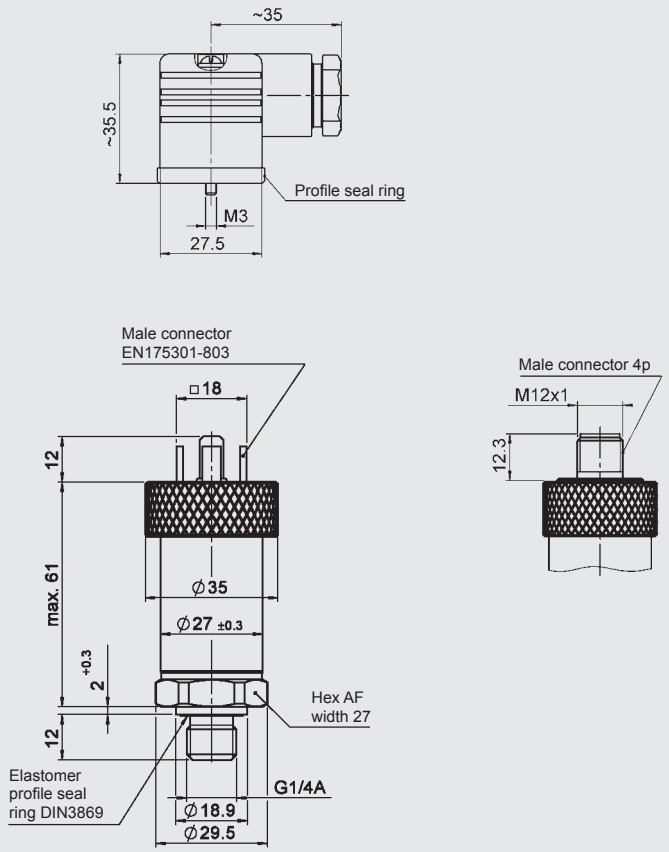

Order details:

The electronic pressure switch EDS 4400 in ATEX version has been specially developed for OEM customers and is available for minimum order quantities of 50 pieces per type. For precise specifications, please contact the Sales Department of HYDAC ELECTRONIC.

Note:

The information in this brochure relates to the operating conditions and applications described.

For applications or operating conditions not described, please contact the relevant technical department.

Subject to technical modifications.

HYDAC ELECTRONIC GMBH
Hauptstr. 27, 66128 Saarbrücken
Germany
Telephone +49 (0)6897 509-01
Fax +49 (0)6897 509-1726
e-mail: electronic@hydac.com
Internet: www.hydac.com

Pressure Switch
EDS 4100 Ex applications

Absolute pressure | **Programmable**

Intrinsically Safe
ATEX approval
1 switching output

Description:

The programmable pressure switch EDS 4100 in ATEX version was specially developed for use in potentially explosive atmospheres and is based on the EDS 4000 series.

The switch point and switch-back point, the function of the switching outputs as N/C or N/O and the switching delay are user-programmable in conjunction with the HYDAC Programming Unit HPG 3000.

As with the industry model, the programmable EDS 4100 in ATEX version has a ceramic measurement cell with thick-layer strain gauge for measuring absolute pressure in the low pressure range.

The main fields of application are in the oil and gas industry, in mining and in locations with high dust contamination.

Protection types and applications:

I M1	Ex ia	I	
II 1G	Ex ia	IIC	T4, T5, T6
II 1/2G	Ex ia	IIC	T4, T5, T6
II 2G	Ex ia	IIC	T4, T5, T6
II 1D	Ex iaD 20		T100 °C

Technical data:

Input data			
Measuring ranges	bar	1	2.5
Overload pressures	bar	3	8
Burst pressure	bar	5	12
Mechanical connection		G1/4 A ISO 1179-2	
Tightening torque, recommended		20 Nm	
Parts in contact with fluid		Sensor: Ceramic Mech. connection: 1.4301 Seal: FKM / EPDM (as per model code)	
Output data			
Switching output		1 transistor output: PNP Switching current: during operation: I_{max} ≤ 34 mA Switching cycles: > 100 million Switch point/hysteresis: user-programmable with HYDAC Programming Unit HPG 3000 Switch-on and switch-off delay: 8 .. 2000 ms; user-programmable with HYDAC Programming Unit HPG 3000	
Accuracy acc. to DIN 16086, terminal based		≤ ± 0.5 % FS typ. ≤ ± 1 % FS max.	
Temperature compensation Zero point		≤ ± 0.02 % FS / °C typ. ≤ ± 0.03 % FS / °C max.	
Temperature compensation Span		≤ ± 0.02 % FS / °C typ. ≤ ± 0.03 % FS / °C max.	
Repeatability		≤ ± 0.1 % FS max.	
Long-term drift		≤ ± 0.3 % FS typ. / year	
Environmental conditions			
Compensated temperature range		-25 .. +85 °C	
Operation, ambient, fluid temperature range		T6: Ta = -20 .. +60 °C T5, T4, T100: Ta = -20 .. +70 °C	
Storage temperature range		-40 .. +100 °C	
CE mark		EN 61000-6-1 / 2 / 3 / 4 EN 60079-0 / 11 / 26 EN 61241-0 / 11 EN 50303	
Vibration resistance acc. to DIN EN 60068-2-6 at 10 .. 500 Hz		≤ 20 g	
Shock resistance acc. to DIN EN 60068-2-27 (1 ms)		≤ 100 g	
Protection class acc. to DIN EN 60529 [1]		IP 67	
Relevant data for Ex applications			
		I M1 II 1G, 1/2G, 2G	**II 1 D**
Supply voltage		14 .. 28 V DC	
Max. input current		100 mA	93 mA
Max. input power		0.7 W	0.65 W
Max. internal capacity		33 nF	33 nF
Max. internal inductance		0 mH	0 mH
Insulation voltage to housing [2]		50 V AC, with integrated overvoltage protection acc. to EN 61000-6-2	
Approved intrinsic safety barriers		Pepperl & Fuchs: Z 787 Telematic Ex STOCK: MTL 7087	
Other data			
Residual ripple of supply voltage		≤ 5 %	
Weight		~ 150 g	

Note: Reverse polarity protection of the supply voltage, overvoltage, override and short circuit protection are provided.
FS (**F**ull **S**cale) = relative to complete measuring range

[1] With mounted mating connector in corresponding protection class
[2] 500 V AC on request

Setting options:

In conjunction with the HYDAC Programming Unit HPG 3000, all the settings are combined in an easy-to-follow menu.

Setting ranges for the switching outputs:

Measuring range in bar	Increment in bar
0 .. 1	0.002
0 .. 2.5	0.005

The switch point (upper switch value) on all instruments is between 5 % and 100 % of the measuring range and the switch-back point (lower switch value) is between 1 % and 96 % of the measuring range.

	Minimum value in ms	Maximum value in ms
Switch-on delay Ton1/Ton2	8	2040
Switch-off delay ToF1/ToF2	8	2040

The increment for all instruments is 8 ms.

Pin connections:

M12x1, 5 pole

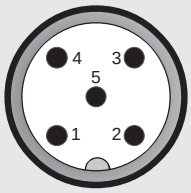

Pin	Process connection	HPG connection
1	$+U_B$	$+U_B$
2	0 V	Comport 1*
3	0 V	0 V
4	Out 1	n.c.
5	0 V	Comport 2*

* Comport = programming connection

Fields of application:

Code no. for use in model code	1	2	3	8
Protection type	I M1 Ex ia I	II 1G Ex ia IIC T4, T5, T6	II 2G Ex ia IIC II 1/2G Ex ia IIC T4, T5, T6	II 1D Ex iaD 20 T100 °C
Certificate	DEKRA EXAM BVS 07 ATEX E 041 X			
Application fields	Group I Category M1 Mining Protection type: intrinsically safe ia with barrier	Group II Category 1G Gases Protection type: intrinsically safe ia with barrier For use in Zone 0, 1, 2	Group II Category 2G, 1/2G Gases Protection type: intrinsically safe ia with barrier For use in Zone 1, 2 For mounting to Zone 0	Group II Category 1D Dusts Protection type: intrinsically safe ia with barrier For use in Zone 20, 21, 22 For mounting to Zone 20

Model code:

EDS 4 1 4 8 – XXXX – P – A N X – 000 – X 1

Mechanical connection
4 = G1/4 A ISO 1179-2

Electrical connection
8 = male M12x1, 5 pole
(mating connector not supplied)

Measuring ranges in bar
01.0; 02.5

Output technology
P = programmable

Approval
A = ATEX

Insulation voltage
N = 50 V AC to housing

Protection types and applications (code)
1 = I M1 Ex ia I
2 = II 1G Ex ia IIC T4, T5, T6
3 = II 2G Ex ia IIC T4, T5, T6 / II 1/2G Ex ia IIC T4, T5, T6
8 = II 1D Ex iaD 20 T100 °C

Modification number
000 = standard

Sealing material (in contact with fluid)
F = FKM seal (e.g. for hydraulic oils)
E = EPDM seal (e.g. for refrigerants)

Connection material (in contact with fluid)
1 = stainless steel

Dimensions:

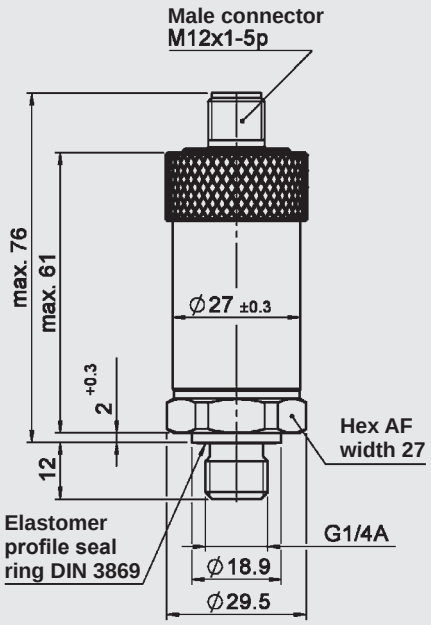

Programming Unit:

(to be ordered separately)

HPG 3000 – 000
Portable Programming Unit
Part No. 909422

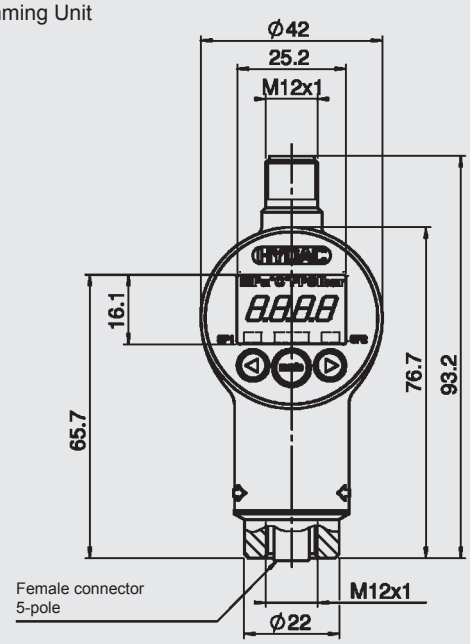

Important note:

The HPG 3000 Programming Unit may only be used outside the explosion risk zone.

Note:

The information in this brochure relates to the operating conditions and applications described.

For applications or operating conditions not described, please contact the relevant technical department.

Subject to technical modifications.

HYDAC ELECTRONIC GMBH
Hauptstr. 27, 66128 Saarbrücken
Germany
Telephone +49 (0)6897 509-01
Fax +49 (0)6897 509-1726
e-mail: electronic@hydac.com
Internet: www.hydac.com

Pressure Switch
EDS 4100 Ex series applications

Absolute pressure | **Factory-set**

Intrinsically Safe
ATEX approval
Customised designs thanks to diverse electrical and mechanical connections
1 switching output

Description:

The pressure switch EDS 4100 in ATEX version has been specially developed for use in potentially explosive atmospheres and is based on the EDS 4000 series.

The switch point and switch-back point, the function of the switching outputs as N/C or N/O and the switching delay are factory-set acc. to customer requirement (not field-adjustable).

As with the industry model, the EDS 4100 in ATEX version has a ceramic measurement cell with thick-layer strain gauge for measuring absolute pressure in the low pressure range.

The main fields of application are in the oil and gas industry, in mining and in locations with high dust contamination.

Protection types and applications:

I M1	Ex ia	I	
II 1G	Ex ia	IIC	T4, T5, T6
II 1/2G	Ex ia	IIC	T4, T5, T6
II 2G	Ex ia	IIC	T4, T5, T6
II 1D	Ex iaD 20		T100 °C

Technical data:

Input data			
Measuring ranges	bar	1	2.5
Overload pressures	bar	3	8
Burst pressure	bar	5	12
Mechanical connection		G1/4 A ISO 1179-2	
Tightening torque, recommended		20 Nm	
Parts in contact with fluid		Sensor: Ceramic Mech. connection: 1.4301 Seal: FKM / EPDM	
Output data			
Switching output		1 transistor output: PNP Switching current: during operation: I_{max} ≤ 34 mA Switching cycles: > 100 million Switch point/switch-back point: acc. to customer specification Switch-on and switch-off delay: 32 ms standard (8 .. 2000 ms acc. to customer spec.)	
Accuracy acc. to DIN 16086, terminal based		≤ ± 0.5 % FS typ. ≤ ± 1 % FS max.	
Temperature compensation Zero point		≤ ± 0.02 % FS / °C typ. ≤ ± 0.03 % FS / °C max.	
Temperature compensation Span		≤ ± 0.02 % FS / °C typ. ≤ ± 0.03 % FS / °C max.	
Repeatability		≤ ± 0.1 % FS	
Long-term drift		≤ ± 0.3 % FS typ. / year	
Environmental conditions			
Compensated temperature range		-25 .. +85 °C	
Operation, ambient, fluid temperature range		T6: Ta = -20 .. +60 °C T5, T4, T100: Ta = -20 .. +70 °C	
Storage temperature range		-40 .. +100 °C	
CE mark		EN 61000-6-1 / 2 / 3 / 4 EN 60079-0 / 11 / 26 EN 61241-0 / 11 EN 50303	
Vibration resistance acc. to DIN EN 60068-2-6 at 10 .. 500 Hz		≤ 20 g	
Shock resistance acc. to DIN EN 60068-2-27 (1 ms)		≤ 100 g	
Protection class acc. to DIN EN 60529 [1]		IP 67	
Relevant data for Ex applications			
		I M1 II 1G, 1/2G, 2G	**II 1 D**
Supply voltage		14 .. 28 V DC	
Max. input current		100 mA	93 mA
Max. input power		0.7 W	0.65 W
Max. internal capacity		33 nF	33 nF
Max. internal inductance		0 mH	0 mH
Insulation voltage to housing [2]		50 V AC, with integrated overvoltage protection acc. to EN 61000-6-2	
Approved intrinsic safety barriers		Pepperl & Fuchs: Z 787 Telematic Ex STOCK: MTL 7087	
Other data			
Residual ripple of supply voltage		≤ 5 %	
Weight		~ 150 g	

Note: Reverse polarity protection of the supply voltage, overvoltage, override and short circuit protection are provided.
FS (**F**ull **S**cale) = relative to complete measuring range

[1] With mounted mating connector in corresponding protection class
[2] 500 V AC on request

Fields of application:

Protection type	I M1 Ex ia I	II 1G Ex ia IIC T4, T5, T6	II 2G Ex ia IIC II 1/2G Ex ia IIC T4, T5, T6	II 1D Ex iaD 20 T100 °C
Certificate	DEKRA EXAM BVS 07 ATEX E 041 X			
Application fields	Group I Category M1 Mining Protection type: intrinsically safe ia with barrier	Group II Category 1G Gases Protection type: intrinsically safe ia with barrier For use in Zone 0, 1, 2	Group II Category 2G, 1/2G Gases Protection type: intrinsically safe ia with barrier For use in Zone 1, 2 For mounting to Zone 0	Group II Category 1D Dusts Protection type: intrinsically safe ia with barrier For use in Zone 20, 21, 22 For mounting to Zone 20

Dimensions:

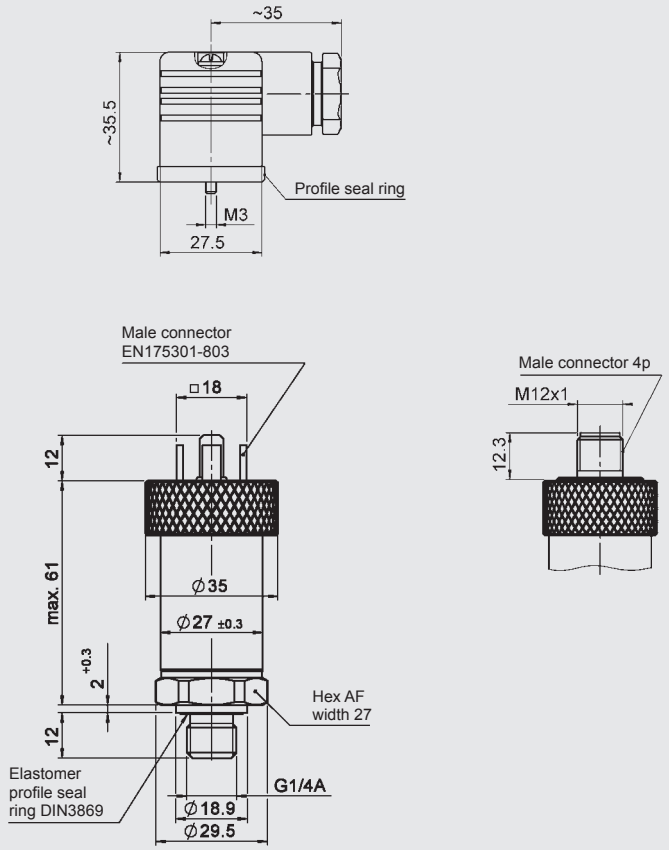

Order details:

The electronic pressure switch EDS 4400 in ATEX version has been specially developed for OEM customers and is available for minimum order quantities of 50 pieces per type. For precise specifications, please contact the Sales Department of HYDAC ELECTRONIC.

Note:

The information in this brochure relates to the operating conditions and applications described.

For applications or operating conditions not described, please contact the relevant technical department.

Subject to technical modifications.

HYDAC ELECTRONIC GMBH
Hauptstr. 27, 66128 Saarbrücken
Germany
Telephone +49 (0)6897 509-01
Fax +49 (0)6897 509-1726
e-mail: electronic@hydac.com
Internet: www.hydac.com

Pressure Switch
EDS 300 shipping applications

Relative pressure | Display

2 switching outputs
Analogue output

Description:

The EDS 300 is a compact, electronic pressure switch with digital display. The pressure measurement is based on a strain gauge sensor cell in stainless steel. All parts in contact with fluid are in stainless steel, and are welded together. Since no seals are required in the sensor interior, leakage is eliminated. Two relay switching outputs with N/O function and an additional analogue output signal (4 .. 20 mA) enable the pressure switch to be incorporated into modern control systems. The switch points and the corresponding hystereses can easily be adjusted via the key pad.

For optimum adaptation to a particular application, the instrument has many additional setting parameters, e.g. switching direction of the relays or switching delay times.

Fields of application are pressure or limit monitoring on marine transmissions, diesel engines, pumps and general hydraulic and pneumatic systems.

Approvals:

- American Bureau of Shipping
- Lloyds Register of Ships
- Det Norske Veritas Germanischer Lloyd
- Bureau Veritas

Other approvals on request

Technical data:

Input data									
Measuring ranges	bar	6	16	40	100	250	400	600	-1 .. 5
Overload pressures	bar	15	32	80	200	500	800	1000	15
Burst pressure	bar	100	200	200	500	1000	2000	2000	100
Mechanical connection				G1/4 A ISO 1179-2					
Tightening torque, recommended				20 Nm					
Parts in contact with fluid				Mech. connection: Stainless steel Seal: FKM					
Output data									
Switching outputs				2 relay contacts Switching current: 0.01 mA .. 1 A Switching voltage: 10 mV .. 60 V (AC/DC) Switching capacity (ohmic resistance): 30 W / 30 VA Switching cycles (ohmic resistance): 20 million at minimum load 0.5 million at maximum load					
Analogue output, permitted load resistance				4 .. 20 mA			Load resist. max. 400 Ω		
Accuracy acc. to DIN 16086, terminal based				≤ ± 0.5 % FS typ. ≤ ± 1 % FS max.					
Temperature compensation, zero point				≤ ± 0.02 % FS / °C typ. ≤ ± 0.03 % FS / °C max.					
Temperature compensation, span				≤ ± 0.02 % FS / °C typ. ≤ ± 0.03 % FS / °C max.					
Repeatability				≤ ± 0.5 % FS max.					
Reaction time				approx. 10 ms					
Long-term drift				≤ ± 0.3 % FS / year					
Environmental conditions									
Compensated temperature range				-10 .. +70 °C					
Operating temperature range				-25 .. +80 °C					
Storage temperature range				-40 .. +80 °C					
Fluid temperature range				-25 .. +80 °C					
CE mark				EN 61000-6-1 / 2 / 3 / 4					
Vibration resistance acc. to DIN EN 60068-2-6 at 10 .. 500 Hz				5 .. 25 Hz: 3.2 mm 25 .. 500 Hz: 4 g					
Shock resistance acc. to DIN EN 60068-2-27 (11 ms)				≤ 50 g					
Protection class acc. to DIN EN 60529 [1]				IP 65					
Other data									
Supply voltage				20 .. 32 V DC					
Residual ripple of supply voltage				≤ 5 %					
Current consumption				approx. 100 mA					
Display				4-digit, LED, 7 segment, red, height of digits 6.4 mm					
Weight				~ 300 g					

Note: Reverse polarity protection of the supply voltage, overvoltage, override and short circuit protection are provided.
FS (**F**ull **S**cale) = relative to complete measuring range
[1] With mounted mating connector in corresponding protection class

Setting options:

All settings available on the EDS 300 are grouped in 2 easy-to-navigate menus. In order to prevent unauthorised adjustment of the device, a programming lock can be set.

Setting ranges for the switching outputs:

Switch point function

Measuring range in bar	Switch point in bar	Hysteresis in bar	Incre-ment* in bar
-1 .. 5	-0.85 .. 5	0.05 .. 5.9	0.05
0 .. 6	0.15 .. 6	0.05 .. 5.9	0.05
0 .. 16	0.3 .. 16	0.1 .. 15.8	0.1
0 .. 40	0.6 .. 40	0.2 .. 39.6	0.2
0 .. 100	1.5 .. 100	0.5 .. 99.0	0.5
0 .. 250	3.0 .. 250	1.0 .. 248.0	1.0
0 .. 400	6.0 .. 400	2.0 .. 396.0	2.0
0 .. 600	15.0 .. 600	5.0 .. 590.0	5.0

* All ranges given in the table can be adjusted by the increments shown.

Additional functions:

- Scale of the measuring range adjustable (bar or psi)
- Switching direction of the relays adjustable (N/C or N/O function)
- Switch-on and switch-off delay adjustable from 0.0 .. 75.0 seconds
- Choice of display (actual pressure, peak value, switch point 1, switch point 2, display off)
- Subsequent correction of zero point in the range ± 3 % FS possible

Pin connections:

DIN EN 175201-804

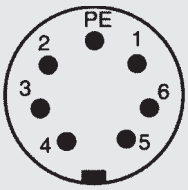

Pin	EDS 347-4
1	$+U_B$
2	Centre relay 1 and 2
3	Relay contact 1 (SP1)
4	0 V
5	Analogue
6	Relay contact 2 (SP2)
⊥	Housing

Dimensions:

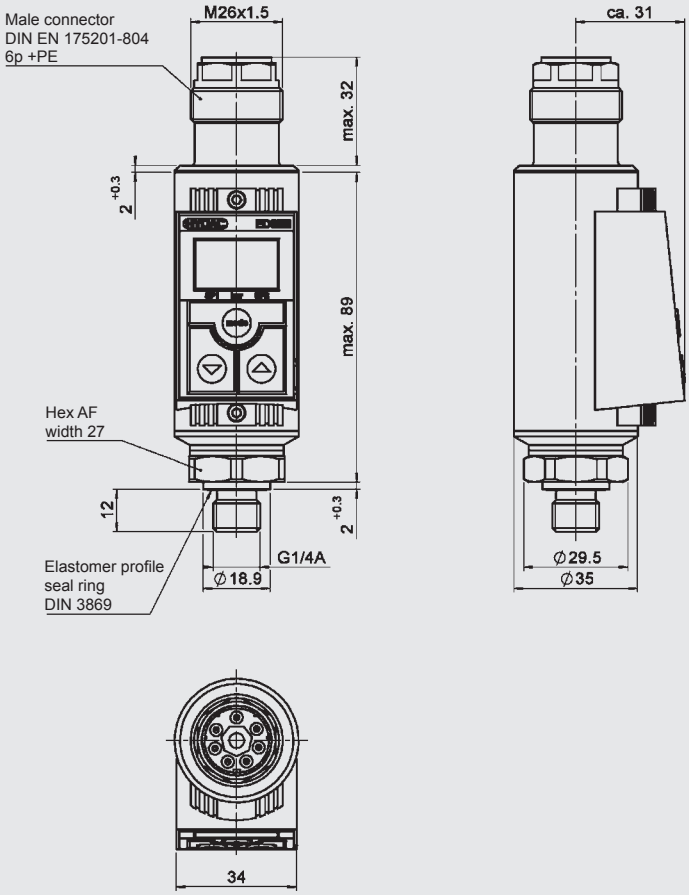

Model code:

EDS 3 4 7 – 4 – XXX – SXX

Mechanical connection
4 = G1/4 A ISO 1179-2

Electrical connection
7 = male DIN EN 175201-804, 6 pole + PE
(ZBE 10 mating connector not supplied)

Output
4 = 2 switching outputs and 1 analogue output

Measuring ranges in bar
006; 016; 040; 100; 250; 400; 600

Modification number
S00 = version in bar (except -1 .. 5 bar)
S13 = vacuum version -1 .. 5 bar (in connection with measuring range "006")

Accessories available: (not supplied with instrument)

ZBE 10	mating connector DIN EN 175201-804, 6 pole + PE, right-angle	Part no.: 654527
ZBM 300	clamp for wall-mounting - screw-type fitting -	Part no.: 906385
ZBM 310	clamp for wall-mounting - weld-type fitting -	Part no.: 6011511

More detailed information on accessories as well as on further accessories such as mating connectors can be found in the Accessories brochure.

Note:

The information in this brochure relates to the operating conditions and applications described.

For applications or operating conditions not described, please contact the relevant technical department.

Subject to technical modifications.

HYDAC ELECTRONIC GMBH
Hauptstr. 27, 66128 Saarbrücken
Germany
Telephone +49 (0)6897 509-01
Fax +49 (0)6897 509-1726
e-mail: electronic@hydac.com
Internet: www.hydac.com

TEMPERATURE

TEMPERATURE TRANSMITTERS [3]

Page

GENERAL APPLICATIONS

ETS 4100					225
ETS 4500					227
ETS 7000					229
HTT 8000				OEM	231
ETS 4100		CAN			233
ETS 4100		HART			235

POTENTIALLY EXPLOSIVE ATMOSPHERE

ETS 4500			Flameproof enclosure	ATEX, IECEx, CSA	239
ETS 4100		HART	Flameproof enclosure	ATEX, IECEx, CSA	243
ETS 4100	Junction-Box	HART	Flameproof enclosure	ATEX, IECEx, CSA	247
ETS 4100		HART	Intrinsically safe	ATEX, IECEx	251

Temperature Transmitter ETS 4100

Integrated temperature probe | **Accuracy 0.4 %**

Description:

The ETS 4100 is a robust electronic temperature transmitter which is particularly suited to measuring temperature in hydraulic applications in industry.

The temperature sensor, based on a PT 1000 and corresponding evaluation electronics, is capable of measuring temperatures in the range of -25 °C .. +100 °C.

The sensor has analogue output signals of 4 .. 20 mA and 0 .. 10 V available as standard for integration in modern control systems. The pressure resistance of up to 600 bar and excellent EMC characteristics make the ETS 4100 ideal for use in harsh conditions.

Technical data:

Input data						
Measuring range	-25 .. +100 °C					
Probe length	mm	6	50	100	250	350
Probe diameter	mm	4.5	8	8	8	8
Pressure resistance	bar	600	125	125	125	125
Mechanical connection	G1/4 A ISO 1179-2					
Tightening torque, recommended	20 Nm					
Parts in contact with fluid [1]	Mech. connection: Stainless steel Seal: FKM					
Output data						
Output signal, permitted load resistance	4 .. 20 mA, 2-conductor $R_{Lmax.} = (U_B - 8\ V) / 20\ mA\ [k\Omega]$ 0 .. 10 V, 3-conductor $R_{Lmin.} = 2\ k\Omega$					
Accuracy (at room temperature)	≤ ± 0.4 % FS typ. ≤ ± 0.8 % FS max.					
Temperature drift (environment)	≤ ± 0.01 % FS / °C					
Response time acc. to DIN EN 60751	t_{50}: ~ 4 s t_{90}: ~ 8 s					
Environmental conditions						
Operating temperature range [2]	-40 .. +85 °C / -25 .. +85 °C					
Storage temperature range	-40 .. +100 °C					
Fluid temperature range [2]	-40 .. +125 °C / -25 .. +125 °C					
CE mark	EN 61000-6-1 / 2 / 3 / 4					
Vibration resistance acc. to DIN EN 60068-2-6 at 10 .. 500 Hz	≤ 25 g					
Shock resistance acc. to DIN EN 60068-2-27	20 g for 6 mm probe length < 20 g for all others					
Protection class acc. to DIN EN 60529 [3]	IP 65 (Binder 714 M18) IP 67 - male connector M12x1 - male connector EN 175301-803					
Other data						
Supply voltage	8 .. 32 V DC 2-conductor 12 .. 32 V DC 3-conductor					
Residual ripple of supply voltage	≤ 5 %					
Current consumption 3-conductor	~ 25 mA					
Weight	~ 200 g (probe length 6 mm) ~ 215 g (probe length 50 mm) ~ 235 g (probe length 100 mm) ~ 280 g (probe length 250 mm) ~ 315 g (probe length 350 mm)					

Note: Reverse polarity protection of the supply voltage, overvoltage, override and short circuit protection are provided.
FS (**F**ull **S**cale) = relative to complete measuring range

[1] Other seal materials on request
[2] -25 °C with FKM seal, -40 °C on request
[3] With mounted mating connector in corresponding protection class

Dimensions:

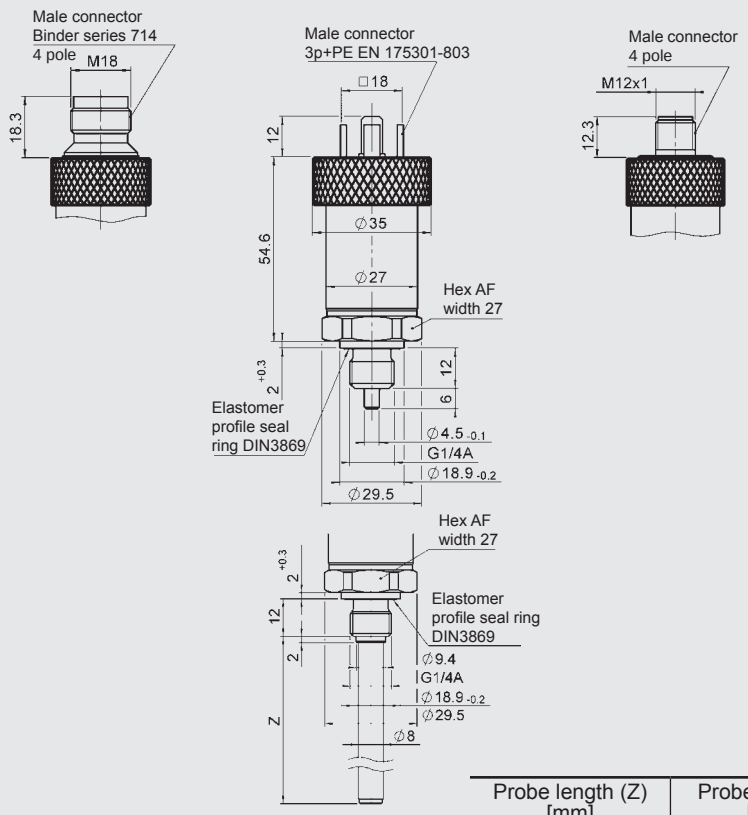

Probe length (Z) [mm]	Probe diameter [mm]
6	4.5
50	8
100	8
250	8
350	8

Model code:

ETS 4 1 4 X – X – XXX – 000

Mechanical connection
4 = G 1/4 A ISO 1179-2

Electrical connection
4 = male, Binder series 714 M18, 4 pole (mating connector not supplied)
5 = male EN 175301-803, 3 pole + PE (mating connector supplied)
6 = male M12x1, 4 pole (mating connector not supplied)

Output signal
A = 4 .. 20 mA, 2-conductor
B = 0 .. 10 V, 3-conductor

Probe length
006 = 6 mm
050 = 50 mm
100 = 100 mm
250 = 250 mm
350 = 350 mm

Modification number
000 = standard

Accessories:
Appropriate accessories, such as mating connectors, can be found in the Accessories brochure.

Pin connections:

Binder series 714 M18

Pin	ETS 4144-A	ETS 4144-B
1	n.c.	$+U_B$
2	Signal +	Signal
3	Signal -	0 V
4	n.c.	n.c.

EN175301-803

Pin	ETS 4145-A	ETS 4145-B
1	Signal +	$+U_B$
2	Signal -	0 V
3	n.c.	Signal
⊥	Housing	Housing

M12x1

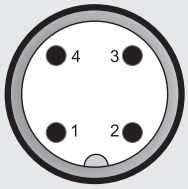

Pin	ETS 4146-A	ETS 4146-B
1	Signal +	$+U_B$
2	n.c.	n.c.
3	Signal -	0 V
4	n.c.	Signal

Note:

The information in this brochure relates to the operating conditions and applications described.

For applications or operating conditions not described, please contact the relevant technical department.

Subject to technical modifications.

HYDAC ELECTRONIC GMBH
Hauptstr. 27, 66128 Saarbrücken
Germany
Telephone +49 (0)6897 509-01
Fax +49 (0)6897 509-1726
e-mail: electronic@hydac.com
Internet: www.hydac.com

Temperature Transmitter ETS 4500

Integrated temperature probe | **Accuracy 1 %**

Description:

The ETS 4500 is a robust electronic temperature transmitter which is particularly suited to measuring temperature in hydraulic applications in industry.

Based on a silicon semiconductor device and corresponding evaluation electronics, the temperature sensor is designed to measure temperatures within a range of -25 °C .. +100 °C.

The sensor has analogue output signals of 4 .. 20 mA and 0 .. 10 V available as standard for integration in modern control systems. The pressure resistance up to 600 bar and excellent EMC characteristics make the ETS 4500 ideal for use in harsh conditions.

Technical data:

Input data						
Measuring range	-25 .. +100 °C					
Probe length	mm	10.7	50	100	250	350
Probe diameter	mm	8	8	8	8	8
Pressure resistance	bar	600	125	125	125	125
Mechanical connection	G1/4 A ISO 1179-2					
Tightening torque, recommended	20 Nm					
Parts in contact with fluid [1]	Mech. connection: Stainless steel Seal: FKM					
Output data						
Output signal, permitted load resistance	4 .. 20 mA, 2-conductor $R_{Lmax.} = (U_B - 8\ V) / 20\ mA\ [k\Omega]$ 0 .. 10 V, 3-conductor $R_{Lmin.} = 2\ k\Omega$					
Accuracy (at room temperature)	≤ ± 1.0 % FS typ. ≤ ± 2.0 % FS max.					
Temperature drift (environment)	≤ ± 0.02 % FS / °C					
Response time acc. to DIN EN 60751	t_{50}: ~ 4 s t_{90}: ~ 8 s					
Environmental conditions						
Operating temperature range [2]	-40 .. +85 °C / -25 .. +85 °C					
Storage temperature range	-40 .. +100 °C					
Fluid temperature range [2]	-40 .. +125 °C / -25 .. +125 °C					
CE mark	EN 61000-6-1 / 2 / 3 / 4					
Vibration resistance acc. to DIN EN 60068-2-6 at 10 .. 500 Hz	≤ 25 g					
Shock resistance acc. to DIN EN 60068-2-27	< 20 g					
Protection class acc. to DIN EN 60529 [3]	IP 67					
Other data						
Supply voltage	8 .. 32 V DC 2-conductor 12 .. 32 V DC 3-conductor					
Residual ripple of supply voltage	≤ 5 %					
Current consumption 3-conductor	~ 25 mA					
Weight	~ 200 g (probe length 10.7 mm) ~ 215 g (probe length 50 mm) ~ 235 g (probe length 100 mm) ~ 280 g (probe length 250 mm) ~ 315 g (probe length 350 mm)					

Note: Reverse polarity protection of the supply voltage, overvoltage, override and short circuit protection are provided.
FS (**F**ull **S**cale) = relative to complete measuring range

[1] Other seal materials on request
[2] -25 °C with FKM seal, -40 °C on request
[3] With mounted mating connector in corresponding protection class

Dimensions:

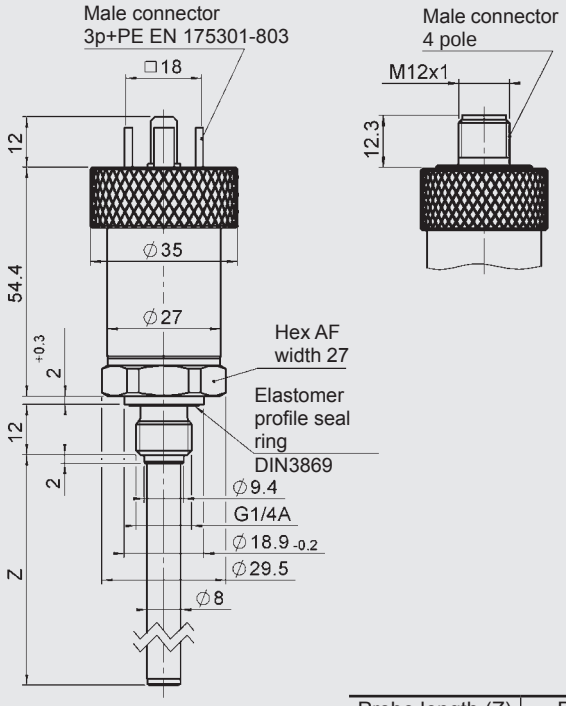

Probe length (Z) [mm]	Probe diameter [mm]
10.7	8
50	8
100	8
250	8
350	8

Model code:

ETS 4 5 4 X – X – XXX – 000

Mechanical connection
4 = G 1/4 A ISO 1179-2

Electrical connection
5 = male, EN 175301-803, 3 pole + PE
(mating connector supplied)
6 = male M12x1, 4 pole
(mating connector not supplied)

Output signal
A = 4 .. 20 mA, 2-conductor
B = 0 .. 10 V, 3-conductor

Probe length
010 = 10.7 mm
050 = 50 mm
100 = 100 mm
250 = 250 mm
350 = 350 mm

Modification number
000 = standard

Accessories:
Appropriate accessories, such as mating connectors, can be found in the Accessories brochure.

Pin connections:

EN175301-803

Pin	ETS 4545-A	ETS 4545-B
1	Signal +	$+U_B$
2	Signal -	0 V
3	n.c.	Signal
⊥	Housing	Housing

M12x1

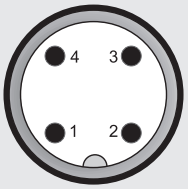

Pin	ETS 4546-A	ETS 4546-B
1	Signal +	$+U_B$
2	n.c.	n.c.
3	Signal -	0 V
4	n.c.	Signal

Note:

The information in this brochure relates to the operating conditions and applications described.

For applications or operating conditions not described, please contact the relevant technical department.

Subject to technical modifications.

HYDAC ELECTRONIC GMBH
Hauptstr. 27, 66128 Saarbrücken
Germany
Telephone +49 (0)6897 509-01
Fax +49 (0)6897 509-1726
e-mail: electronic@hydac.com
Internet: www.hydac.com

Temperature Transmitter ETS 7200

Integrated temperature probe | **Accuracy 1 %**

Description:

The ETS 7200 is an electronic temperature transmitter which, because of its compact design, is particularly suited to measuring temperature in hydraulic applications in the industrial and mobile sectors. Based on a silicon semiconductor device and corresponding evaluation electronics, the temperature sensor is designed to measure temperatures in the range -25 .. +100 °C.

Various analogue output signals, e.g. 4 .. 20 mA or 0 .. 10 V, are available on the standard version for integration into modern controls. These can be output to the periphery via an M12x1 connector.

The pressure resistance up to 600 bar and excellent EMC characteristics make the ETS 7000 ideal for use in harsh conditions.

Technical data:

Input data	
Measuring range	-25 .. +100 °C
Probe length	10 mm
Probe diameter	6.7 mm
Pressure resistance	600 bar
Mechanical connection	G1/4 A ISO 1179-2
Tightening torque, recommended	20 Nm
Parts in contact with fluid	Mech. connection: Stainless steel Seal: FKM
Output data	
Output signal, permitted load resistance	4 .. 20 mA, 2-conductor $R_{Lmax} = (U_B - 8\ V) / 20\ mA\ [k\Omega]$ 0 .. 10 V, 3-conductor $R_{Lmin.} = 2\ k\Omega$
Accuracy (at room temperature)	≤ ± 1.0 % FS typ. ≤ ± 2.0 % FS max.
Temperature drift (environment)	≤ ± 0.02 % FS / °C
Response time acc. to DIN EN 60751	t_{50}: 4 s t_{90}: 8 s
Environmental conditions	
Operating temperature range	-25 .. +80 °C
Storage temperature range	-40 .. +100 °C
Fluid temperature range [1]	-40 .. +100 °C / -25 .. +100 °C
CE mark	EN 61000-6-1 / 2 / 3 / 4
cULus mark [2]	Certificate no. E318391
Vibration resistance acc. to DIN EN 60068-2-6 at 10 .. 500 Hz	≤ 20 g
Shock resistance acc. to DIN EN 60068-2-27	100 g / 6 ms
Protection class acc. to DIN EN 60529 [3]	IP 67
Other data	
Supply voltage	8 .. 30 V DC 2-conductor 12 .. 30 V DC 3-conductor
when applied acc. to UL specifications	- limited energy - acc. to 9.3 UL 61010; Class 2; UL 1310/1585; LPS UL 60950
Residual ripple supply voltage	≤ 5 %
Current consumption	≤ 25 mA
Weight	~ 50 g

Note: Reverse polarity protection of the supply voltage, overvoltage, override and short circuit protection are provided.
FS (**F**ull **S**cale) = relative to complete measuring range

[1] -25 °C with FKM seal, -40 °C on request
[2] Environmental conditions acc. to 1.4.2 UL 61010-1; C22.2 No. 61010-1
[3] With mounted mating connector in corresponding protection class

Dimensions:

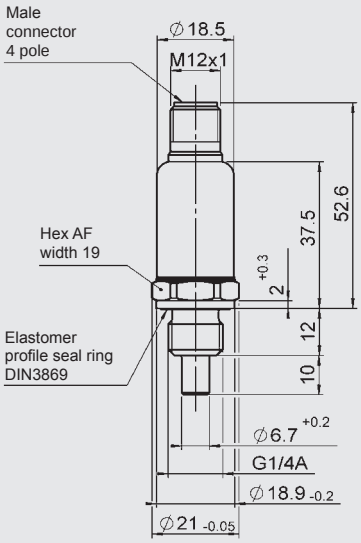

Pin connections:

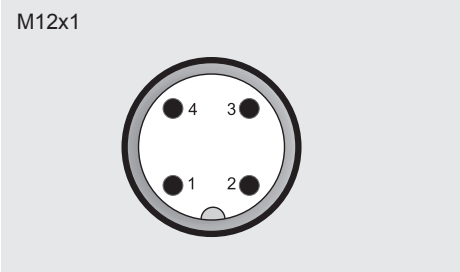

Pin	ETS 7246-A	ETS 7246-B
1	Signal +	$+U_B$
2	n.c.	n.c.
3	Signal -	0 V
4	n.c.	Signal

Model code:

ETS 7 2 4 6 – X – 010 – 000

Mechanical connection
4 = G1/4 A ISO 1179-2

Electrical connection
6 = male M12x1, 4 pole
(mating connector not supplied)

Signal
A = 4 .. 20 mA, 2-conductor
B = 0 .. 10 V, 3-conductor

Probe length
010 = 10 mm

Modification number
000 = standard

Accessories:
Appropriate accessories, such as mating connectors, can be found in the Accessories brochure.

Note:

The information in this brochure relates to the operating conditions and applications described.

For applications or operating conditions not described, please contact the relevant technical department.

Subject to technical modifications.

HYDAC ELECTRONIC GMBH
Hauptstr. 27, 66128 Saarbrücken
Germany
Telephone +49 (0)6897 509-01
Fax +49 (0)6897 509-1726
e-mail: electronic@hydac.com
Internet: www.hydac.com

Temperature Transmitter HTT 8000 for series applications

Integrated temperature probe | **Accuracy 1 %**

Customised designs thanks to diverse electrical and mechanical connections and a large number of output signals

Description:

The HTT 8000 series of temperature transmitters was specifically developed for OEM applications e.g. in mobile applications. It is based on a silicon semiconductor device with corresponding evaluation electronics.

All parts in contact with fluid are in stainless steel, and are welded together.

For integration into modern controls, standard analogue output signals are available, e.g. 4 .. 20 mA, 0 .. 5 V, 1 .. 6 V or 0 .. 10 V. Ratiometric output signals are also available.

For the electrical connection, various built-in connection plugs are available.

The pressure resistance up to 600 bar and excellent EMC characteristics make the HTT 8000 ideal for use in harsh conditions.

Technical data:

Input data			
Measuring range [1]	-25 .. +125 °C		
Probe length	mm	16	40
Probe diameter	mm	6.7	6.7
Pressure resistance	bar	600	600
Mechanical connection [2]	G1/4 A ISO 1179-2		
Tightening torque, recommended	20 Nm		
Parts in contact with fluid	Mech. connection: Stainless steel Seal: FKM		
Output data			
Output signal	Various signals: 4 .. 20 mA, 0 .. 5 V, 1 .. 6 V, 0 .. 10 V, ratiometric: 0.5 .. 4.5 V for U_B = 5 V DC (10 .. 90 % U_B ± 5 %)		
Accuracy (at room temperature)	≤ ± 1.0 % FS typ. ≤ ± 2.0 % FS max.		
Temperature drift (environment)	≤ ± 0.02 % FS / °C		
Response time acc. to DIN EN 60751	t_{50}: ~ 4 s t_{90}: ~ 8 s		
Environmental conditions			
Operating temperature range [3]	-40 .. +85 °C / -25 .. +85 °C		
Storage temperature range	-40 .. +100 °C		
Fluid temperature range [3]	-40 .. +125 °C / -25 .. +125 °C		
CE mark	EN 61000-6-1 / 2 / 3 / 4		
cULus mark [4]	Certificate no. E318391		
Vibration resistance acc. to DIN EN 60068-2-6 at 10 .. 500 Hz	≤ 25 g		
Shock resistance acc. to DIN EN 60068-2-27	100 g / 6 ms / half-sine 500 g / 1 ms / half-sine		
Protection class [5] acc. to DIN EN 60529 ISO 20653	IP 67 or IP 69 (depending on electr. connection) IP 6K9K		
Other data			
Electrical connection	Various male connectors: M12x1, Packard Metri Pack, Deutsch DT 04, AMP Superseal, AMP Junior Power Timer, jacketed cable		
Supply voltage	8 .. 30 V DC 12 .. 30 V DC for 0 .. 10 V, 5 V DC ± 5 % (ratiometric)		
when applied acc. to UL specifications	- limited energy - acc. to 9.3 UL 61010; Class 2; UL 1310/1585; LPS UL 60950		
Residual ripple supply voltage	≤ 5 %		
Current consumption	≤ 25 mA		
Weight	~ 145 g		

Note: Reverse polarity protection of the supply voltage, overvoltage, override and short circuit protection are provided.
FS (**F**ull **S**cale) = relative to complete measuring range

[1] Other measuring ranges on request
[2] Other mechanical connections on request
[3] -25 °C with FKM seal, -40 °C on request
[4] Environmental conditions acc. to 1.4.2 UL 61010-1; C22.2 No 61010-1
[5] With mounted mating connector in corresponding protection class

Dimensions:

Male connector
DIN 72585-3 pole

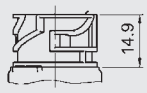

Male connector
Metri-Pack
series 150 3 pole

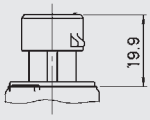

Male connection
DT04 3 pole

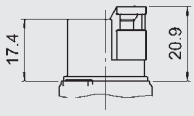

Male connector
Junior Power Timer
3 pole

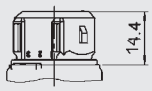

Male connector
Superseal series 1.5
3 pole

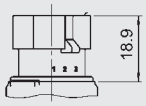

Jacketed cable

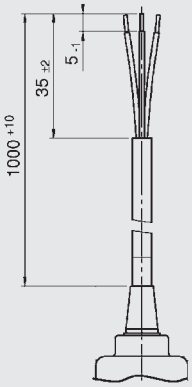

Male connector
EN175301-803
3 pole + PE

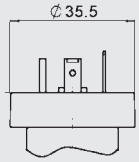

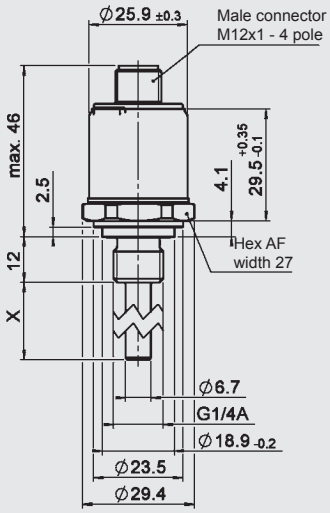

Order details:

The electronic temperature transmitter HTT 8000 has been specially developed for OEM customers and is available for minimum order quantities of 500 units per type.

For precise specifications, please contact the Sales Department of HYDAC ELECTRONIC.

Note:

The information in this brochure relates to the operating conditions and applications described.

For applications or operating conditions not described, please contact the relevant technical department.

Subject to technical modifications.

HYDAC ELECTRONIC GMBH
Hauptstr. 27, 66128 Saarbrücken
Germany
Telephone +49 (0)6897 509-01
Fax +49 (0)6897 509-1726
e-mail: electronic@hydac.com
Internet: www.hydac.com

Temperature Transmitter ETS 4100

Integrated temperature probe | **Accuracy 0.4 %**

CAN interface

SAE J1939 CANopen

Description:

The ETS 4100 is a robust electronic temperature transmitter which is particularly suited to measuring temperature in hydraulic applications in industry.

The measured temperature value is digitised and made available to the CAN field bus system via the CANopen protocol or SAE J1939 protocol. The instrument parameters can be viewed and configured by the user using standard CAN software.

The temperature sensor, based on a PT 1000 and corresponding evaluation electronics, is capable of measuring temperatures in the range of -25 °C .. +100 °C.

The pressure resistance up to 600 bar and excellent EMC characteristics make the ETS 4100 ideal for use in harsh conditions.

Technical data:

Input data						
Measuring range	-25 .. +100 °C					
Probe length	mm	6	50	100	250	350
Probe diameter	mm	4.5	8	8	8	8
Pressure resistance	bar	600	125	125	125	125
Mechanical connection	G¼ A ISO 1179-2					
Tightening torque, recommended	20 Nm					
Parts in contact with fluid [1]	Mech. connection: Stainless steel Seal: FKM					
Output data						
Output signal	CANopen protocol or J1939 protocol, depending on version					
Accuracy (at room temperature)	± 1.0 °C at -10 .. +85 °C ± 1.5 °C at -25 .. +105 °C					
Response time acc. to DIN EN 60751	t_{50}: ~4 s t_{90}: ~8 s					
Environmental conditions						
Operating temperature range [2]	-40 .. +85 °C / -25 .. +85 °C					
Storage temperature range	-40 .. +100 °C					
Fluid temperature range [2]	-40 .. +125 °C / -25 .. +125 °C					
CE mark	EN 61000-6-1 / 2 / 3 / 4					
Vibration resistance acc. to DIN EN 60068-2-6 at 10 .. 500 Hz	≤ 25 g					
Protection class acc. to DIN EN 60529 [3]	IP 67					
Protocol data for CANopen:						
Communication profile	CiA DS 301 V4.2					
Device profile	CiA DS 404 V1.3					
Layer setting Services and Protocol	CiA DSP 305 V2.2					
Automatic bit-rate detection	CiA AN 801					
Baud rates	10 kbit .. 1 Mbit corresp. to DS305 V2.2					
Transmission services - PDO - Transfer	 Measured value as 16/32 bit and float, status synchronous, asynchronous, cyclical, measured value change, exceeding boundaries					
Node ID/baud rate	Can be set via Manufacturer Specific Profile					
Protocol data for SAE J1939						
Data Link Layer	SAE J1939-21					
Network Layer	SAE J1939-31					
Network Management	SAE J1939-81					
Other data						
Supply voltage	9 .. 35 V DC					
Residual ripple of supply voltage	≤ 5 %					
Current consumption 3-conductor	~ 25 mA					
Weight	~ 200 g (probe length 6 mm) ~ 215 g (probe length 50 mm) ~ 235 g (probe length 100 mm) ~ 280 g (probe length 250 mm) ~ 315 g (probe length 350 mm)					

Note: Reverse polarity protection of the supply voltage, overvoltage, override and short circuit protection are provided.
FS (**F**ull **S**cale) = relative to complete measuring range

[1] Other seal materials on request
[2] -25 °C with FKM seal, -40 °C on request
[3] With mounted mating connector in corresponding protection class

Dimensions:

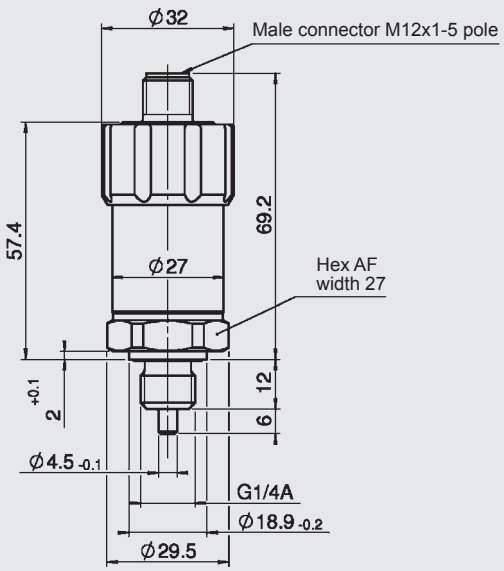

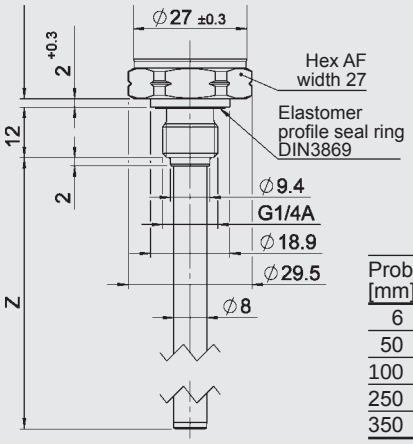

Probe length (Z) [mm]	Probe diameter [mm]
6	4.5
50	8
100	8
250	8
350	8

Model code:

ETS 4 1 4 8 – F1X – XXX - 000

Mechanical connection
4 = G1/4 A ISO 1179-2

Electrical connection
8 = male M12x1, 5 pole (mating connector not supplied)

Output signal
F11 = CANopen
F12 = CAN SAE J1939

Probe lengths
006 = 6 mm
050 = 50 mm
100 = 100 mm
250 = 250 mm
350 = 350 mm

Modification number
000 = standard

Accessories:
Appropriate accessories, such as mating connectors, can be found in the Accessories brochure.

Pin connections:

M12x1

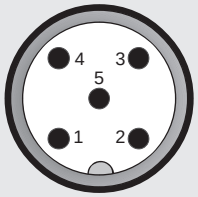

Pin	Signal	Description
1	Housing	Shield/housing
2	$+U_B$	Supply +
3	0 V	Supply -
4	CAN_H	Bus line dominant high
5	CAN_L	Bus line dominant low

Note:

The information in this brochure relates to the operating conditions and applications described.

For applications or operating conditions not described, please contact the relevant technical department.

Subject to technical modifications.

HYDAC ELECTRONIC GMBH
Hauptstr. 27, 66128 Saarbrücken
Germany
Telephone +49 (0)6897 509-01
Fax +49 (0)6897 509-1726
e-mail: electronic@hydac.com
Internet: www.hydac.com

Temperature Transmitter ETS 4100

Integrated temperature probe | **Accuracy 0.4 %**

HART interface
Optional pressure measurement

Description:

The ETS 4100 with HART interface is an electronic temperature transmitter for monitoring of temperature in hydraulic systems.

Based on a silicon semiconductor device and corresponding evaluation electronics, the temperature sensor is designed to measure temperatures within a range of -25 °C .. +100 °C.

In addition to the analogue 4 .. 20 mA output of the measured value, digital communication is possible by means of the HART protocol.

The instrument provides the option of a pressure sensor. The pressure signal is given out as a digital signal via the HART protocol and the temperature signal is still available as an analogue signal (4 .. 20 mA).

The main fields of application are condition monitoring and power plant technology.

Technical data:

Input data						
Measuring range	-25 .. +100 °C					
Probe length	mm	10.7	50	100	250	350
Probe diameter	mm	8	8	8	8	8
Pressure resistance	bar	600	125	125	125	125
Mechanical connection	G1/4 A ISO 1179-2					
Tightening torque, recommended	20 Nm					
Parts in contact with fluid	Stainless steel Seal: FKM					
Output data						
Output signal, permitted load resistance	4 .. 20 mA, 2-conductor, with HART protocol $R_{Lmax} = (U_B - 12\ V) / 20\ mA\ [k\Omega]$ for HART communication min. 250 Ω					
HART Communication	Acc. to HART 7 specifications					
HART Common Practice Commands i.e.	Altering of measuring range limits (see table)					
Accuracy (at room temperature)	≤ ± 0.4 % FS typ. ≤ ± 0.8 % FS max.					
Temperature drift (environment)	≤ ± 0.01 % FS / °C					
Response time acc. to DIN EN 60751	t_{50}: ~ 10 s t_{90}: ~ 15 s					
Environmental conditions						
Operating temperature range [1]	-40 .. +85 °C / -25 .. +85 °C					
Storage temperature range	-40 .. +100 °C					
Fluid temperature range [1]	-40 .. +125 °C / -25 .. +125 °C					
CE mark	EN 61000-6-1 / 2 / 3 / 4					
Vibration resistance acc. to DIN EN 60068-2-6 at 10 .. 500 Hz	≤ 20 g					
Protection class acc. to DIN EN 60529 [2]	IP 67					
Other data						
Supply voltage	12 .. 30 V DC					
Residual ripple of supply voltage	Acc. to FSK Physical Layer Specification (HCF_SPEC_054)					
Current consumption	≤ 25 mA					
Weight	~ 280 g (probe length 10.7 mm) ~ 315 g (probe length 50 mm, 100 mm) ~ 350 g (probe length 250 mm) ~ 385 g (probe length 350 mm)					

Note: Reverse polarity protection of the supply voltage, overvoltage, override and short circuit protection are provided.
FS (**F**ull **S**cale) = relative to complete measuring range
B.F.S.L. = **B**est **F**it **S**traight **L**ine

[1] -25 °C with FKM seal, -40 °C on request
[2] With mounted mating connector in corresponding protection class

Measuring range limits:

By means of HART Common Practice Commands, you have the opportunity to adjust the following measuring range limits;
Measuring range limits of the primary variable, temperature:

Lower measuring range limit		Upper measuring range limit		Measuring span	
min	max	min	max	min	max
-25 °C	75 °C	0 °C	100 °C	25 °C	125 °C

Model code:

ETS 4 1 4 X – F21 – XXX - 000

Mechanical connection
4 = G1/4 A ISO 1179-2

Electrical connection
5 = male, EN 175301-803, 3 pole + PE
(IP 67 mating connector supplied)
6 = male M12x1, 4 pole (mating connector not supplied)

Output signal
F21 = 4 .. 20 mA, 2-conductor, with HART protocol

Probe lengths
010 = 10.7 mm
050 = 50 mm
100 = 100 mm
250 = 250 mm
350 = 350 mm

Modification number:
000 = standard

Accessories:
Appropriate accessories, such as mating connectors, can be found in the Accessories brochure.

Dimensions:

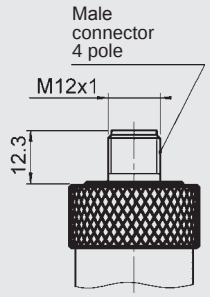

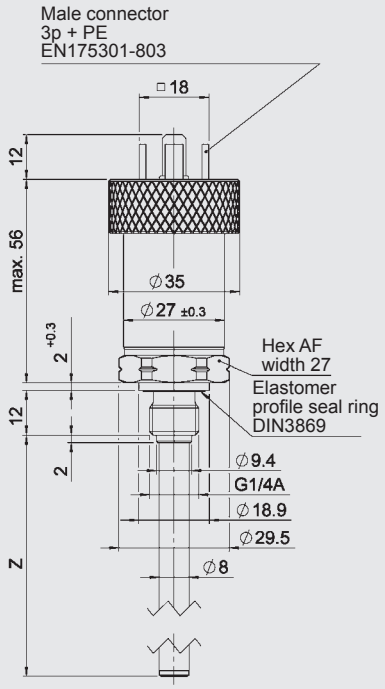

Probe length (Z)
10.7 mm
50 mm
100 mm
250 mm
350 mm

Pin connections:

EN 175301-803

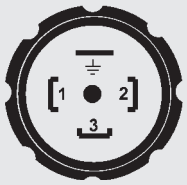

Pin	ETS 41x5-F21
1	Signal +
2	Signal -
3	n.c.
⊥	PE

M12x1

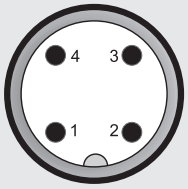

Pin	ETS 41x6-F21
1	Signal +
2	n.c.
3	Signal -
4	n.c.

Additional technical data with pressure measurement option:

Input data								
Measuring ranges	bar	16	40	60	100	250	400	600
Overload pressures	bar	32	80	120	200	500	800	1000
Burst pressure	bar	200	200	300	500	1000	2000	2000
Mechanical connection				G 1/2 A ISO 1179-2 with probe				
Tightening torque, recommended				45 Nm				
Probe length				7 mm				
Output data								
Output signal Temperature				4 .. 20 mA with HART Protocol				
Output signal Pressure				available via HART protocol as a digital signal				
Accuracy acc. to DIN 16086, terminal based				≤ ± 0.25 % FS typ. ≤ ± 0.5 % FS max.				
Accuracy, B.F.S.L.				≤ ± 0.15 % FS typ. ≤ ± 0.25 % FS max.				
Temperature compensation Zero point				≤ ± 0.008 % FS / °C typ. ≤ ± 0.015 % FS / °C max.				
Temperature compensation Span				≤ ± 0.008 % FS / °C typ. ≤ ± 0.015 % FS / °C max.				
Non-linearity acc. to DIN 16086, terminal based				≤ ± 0.3 % FS max.				
Hysteresis				≤ ± 0.1 % FS max.				
Repeatability				≤ ± 0.05 % FS				
Long-term drift				≤ ± 0.1 % FS typ. / year				
Environmental conditions								
Compensated temperature range				-25 .. +85 °C				

Measuring range limits:

By means of HART Common Practice Commands, you have the opportunity to adjust the following measuring range limits;
Measuring range limits of the secondary variable, pressure:

Lower measuring range limit		Upper measuring range limit		Measuring span	
min	max	min	max	min	max
0 % FS	112.5 % FS	37.5 % FS	150 % FS	37.5 % FS	150 % FS

Model code with pressure measurement option:

ETS 4 1 2 X – F21 – 007 – P – XXXX - 000

Mechanical connection
2 = G1/2 A ISO 1179-2

Electrical connection
5 = male, EN 175301-803, 3 pole PE
(IP 67 mating connector supplied)
6 = male M12x1, 4 pole
(mating connector not supplied)

Output signal
F21 = 4 .. 20 mA, 2-conductor, with HART protocol

Probe length
007 = 7 mm

With pressure measurement

Measuring ranges in bar
0016; 0040; 0060; 0100; 0250; 0400; 0600

Modification number
000 = standard

Dimensions with pressure measurement option:

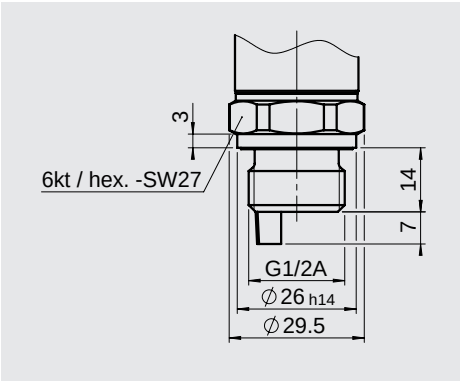

Note:

The information in this brochure relates to the operating conditions and applications described.

For applications or operating conditions not described, please contact the relevant technical department.

Subject to technical modifications.

HYDAC ELECTRONIC GMBH
Hauptstraße 27, 66128 Saarbrücken
Germany
Telephone +49 (0)6897 509-01
Fax +49 (0)6897 509-1726
E-mail: electronic@hydac.com
Internet: www.hydac.com

Temperature Transmitter ETS 4500 Ex applications

Integrated temperature probe | **Accuracy 1 %**

Flameproof enclosure
ATEX, CSA, IECEx, triple approval

Description:

The temperature transmitter series ETS 4500 with flameproof enclosure has triple approval according to ATEX, CSA and IECEx which ensures that the device is universally suitable for use in potentially explosive atmospheres worldwide. Each instrument is certified by the three approvals organizations and is labelled accordingly. Therefore there is no longer any need to stock multiple devices with separate individual approvals.

Based on a silicon semiconductor device and corresponding evaluation electronics, the temperature sensor is designed to measure temperatures within a range of -25 °C .. +100 °C.

The main fields of application are in mining and the oil & gas industry, e.g. in underground vehicles, hydraulic power units, blow-out preventers (BOPs), drill drives or valve actuation stations as well as in locations with high dust contamination.

Protection types and applications:

$_{c}$CSA$_{US}$

Explosionproof - Seal not required
Class I Group A, B, C, D, T6, T5
Class II Group E, F, G
Class III
Type 4

ATEX

Flameproof
I M2 Ex d I Mb
II 2G Ex d IIC T6, T5 Gb
II 2D Ex tb IIIC T110 .. 130 °C Db

IECEx

Flameproof
Ex d I Mb
Ex d IIC T6, T5 Gb
Ex tb IIIC T110 .. 130 °C Db

Technical data:

Input data	
Measuring range	-25 .. +100 °C
Probe length	10.7; 100; 250; 350 mm
Pressure resistance	600 bar (probe length 10.7 mm) 125 bar (probe length 100 mm) 125 bar (probe length 250 mm) 125 bar (probe length 350 mm)
Mechanical connection	G1/4 A ISO 1179-2
Tightening torque, recommended	20 Nm
Parts in contact with fluid	Stainless steel: 1.4571; 1.4301 Seal: FKM
Conduit, housing material	1.4435; 1.4404
Output data	
Output signal [1] permitted load resistance	4 .. 20 mA, 2-conductor $R_{Lmax} = (U_B - 8\ V) / 20\ mA\ [k\Omega]$
Accuracy (at room temperature)	≤ ± 1.0 % FS typ. ≤ ± 2.0 % FS max.
Temperature drift (environment)	≤ 0.02 % FS / °C
Response time acc. to DIN EN 60751	t_{50}: ~ 10 s t_{90}: ~ 15 s
Environmental conditions	
Operating/ambient temperature range [2)3)]	T6, T110 °C Ta = -40 .. +60 °C / -20 .. +60 °C T5: Ta = -40 .. +80 °C / -20 .. +80 °C
Storage temperature range	-40 .. +100 °C
Fluid temperature range [2)3)]	T6, T110 °C Ta = -40 .. +60 °C / -20 .. +60 °C T5: Ta = -40 .. +80 °C / -20 .. +80 °C
CE mark	EN 61000-6-1 / 2 / 3 / 4 EN 60079-0 / 1 / 31
Vibration resistance acc. to DIN EN 60068-2-6 at 10 .. 500 Hz	≤ 10 g
Protection class acc. to DIN EN 60529 ISO 20653	IP 69 IP 6K9K
Other data	
Supply voltage	8 .. 30 V DC
Residual ripple of supply voltage	≤ 5 %
Current consumption	≤ 25 mA
Weight	~ 280 g (probe length 10.7 mm) ~ 315 g (probe length 100 mm) ~ 350 g (probe length 250 mm) ~ 385 g (probe length 350 mm)

Note: Reverse polarity protection of the supply voltage, overvoltage, override and short circuit protection are provided.
FS (**F**ull **S**cale) = relative to complete measuring range

[1] Other output signals on request
[2] -20 °C with FKM seal, -40 °C on request
[3] T130 °C with Ta = : -40 .. +80 °C / -20 .. +80 °C with electr. connection single leads possible

Fields of application:

	Single leads Electrical connection "9"	Jacketed cable Electrical connection "G"
CSA	Explosionproof (seal not required)	
ATEX	Flameproof	
IECEx	Flameproof	
$_{c}$CSA$_{us}$	Class I Group A, B, C, D, T6, T5 Class II Group E, F, G Class III Type 4	
ATEX	I M2 Ex d I Mb II 2G Ex d IIC T6, T5 Gb	
	II 2D Ex tb IIIC T110 .. 130 °C Db	II 2D Ex tb IIIC T110 °C Db
IECEx	Ex d I Mb Ex d IIC T6, T5 Gb	
	Ex tb IIIC T110 .. 130 °C Db	Ex tb IIIC T110 °C Db

Model code:

ETS 4 5 4 X – A– D – XXX – 000 (2m)

Mechanical connection
4 = G1/4 A ISO 1179-2

Electrical connection
9 = 1/2-14 NPT Conduit (male thread), single leads
G = 1/2-14 NPT Conduit (male thread), jacketed cable

Output signal
A = 4 .. 20 mA, 2-conductor

Approval
D = CSA Explosionproof – Seal not required
ATEX Flameproof
IECEx Flameproof

Probe length
010 = 10.7 mm
100 = 100 mm
250 = 250 mm
350 = 350 mm

Modification number
000 = standard

Cable length in m
Standard = 2 m

Dimensions:

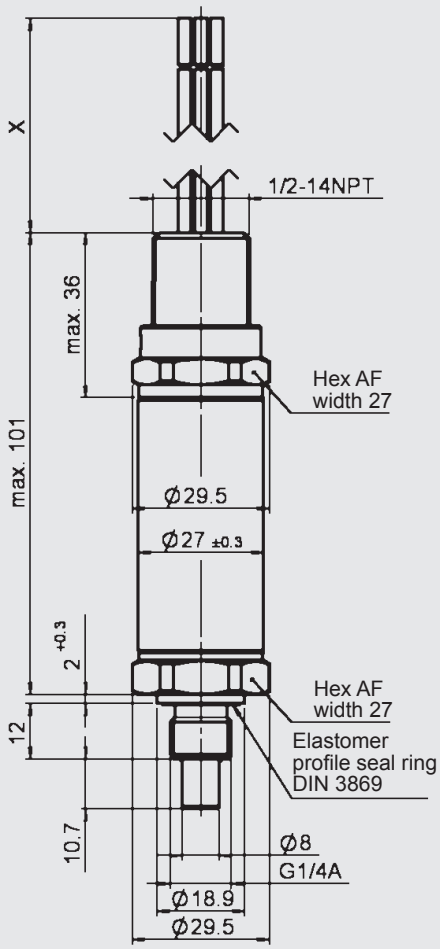

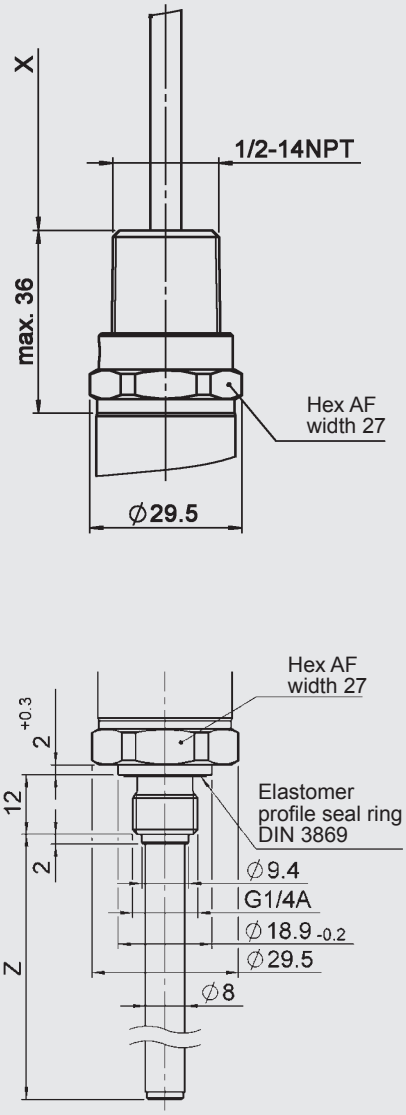

Probe length (Z)
10.7 mm
100 mm
250 mm
350 mm

Pin connections:

Conduit (single leads)

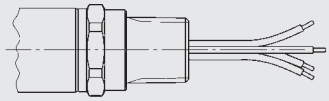

Lead	ETS 4549-A
red	Signal +
black	Signal -
green-yellow	Housing

Conduit (jacketed cable)

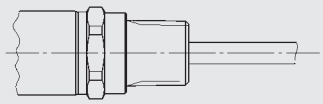

Lead	ETS 454G-A
white	Signal +
brown	Signal -
green	n.c.
yellow	n.c.

Note:

The information in this brochure relates to the operating conditions and applications described.

For applications or operating conditions not described, please contact the relevant technical department.

Subject to technical modifications.

HYDAC ELECTRONIC GMBH
Hauptstr. 27, 66128 Saarbrücken
Germany
Telephone +49 (0)6897 509-01
Fax +49 (0)6897 509-1726
e-mail: electronic@hydac.com
Internet: www.hydac.com

Temperature Transmitter ETS 4100 Ex applications

Integrated temperature probe | **Accuracy 0.4 %**

Flameproof enclosure
ATEX, IECEx, CSA, triple approval
HART interface
Optional pressure measurement

Description:

The ETS 4100 with HART interface is an electronic temperature transmitter in the ignition protection type having flameproof enclosure.

The triple approval in accordance with ATEX, CSA and IECEx enables universal, worldwide utilisation of the devices in potentially explosive atmospheres.

Based on a silicon semiconductor device and corresponding evaluation electronics, the temperature sensor is designed to measure temperatures within a range of -25 .. +100 °C.

The sensor has an analogue output signal of 4 .. 20 mA available as standard to enable integration into modern controls. In addition to the analogue output of the measured value, digital communication is possible by means of the HART protocol.

The instrument provides the option of a pressure sensor. The pressure signal is given out as a digital signal via the HART protocol and the temperature signal is still available as an analogue signal (4 .. 20 mA).

The main fields of application are in the oil & gas industry, e.g. in hydraulic power units, drill drives or valve actuation stations. The device is also used in mining applications as well as in locations with high dust contamination.

Protection types and applications:

$_{c}$CSA$_{us}$

Explosionproof - Seal not required
Class I Group A, B, C, D, T6, T5
Class II Group E, F, G
Class III
Type 4

ATEX

Flameproof
I M2 Ex d I Mb
II 2G Ex d IIC T6, T5 Gb
II 2D Ex tb IIIC T110 .. 120 °C Db

IECEx

Flameproof
Ex d I Mb
Ex d IIC T6, T5 Gb
Ex tb IIIC T110 .. 120 °C Db

Technical data:

Input data		
Measuring range	-25 .. +100 °C	
Probe lengths	10.7; 50; 100; 250; 350 mm	
Probe diameter	8 mm	
Pressure resistance	600 bar (probe length 10.7 mm) 125 bar (probe length ≥ 50 mm)	
Mechanical connection	G¼ A ISO 1179-2	
Tightening torque, recommended	20 Nm	
Parts in contact with fluid	Stainless steel: 1.4571; 1.4301 Seal: FKM	
Conduit- / Housing material	1.4404, 1.4435	
Output data		
Output signal, permitted load resistance	4 .. 20 mA, 2-conductor, with HART protocol $R_{Lmax.} = (U_B - 12\ V) / 20\ mA\ [k\Omega]$ for HART communication min. 250 Ω	
HART Communication	Acc. to HART 7 specifications	
HART Common Practice Commands i.e.	Altering of measuring range limits (see table)	
Accuracy (at room temperature)	≤ ± 0.4 % FS typ. ≤ ± 0.8 % FS max.	
Temperature drift (environment)	≤ ± 0.01 % FS / °C	
Response time acc. to DIN EN 60751	t_{50}: ~ 10 s t_{90}: ~ 15 s	
Environmental conditions		
Operating / ambient temperature range [1) 2)]	T6, T110 T5	Ta = -40 .. +60 °C / -20 .. +60 °C Ta = -40 .. +70 °C / -20 .. +70 °C
Storage temperature range	-40 °C .. +100 °C	
Fluid temperature range [1) 2)]	T6, T110 T5	Ta = -40 .. +60 °C / -20 .. +60 °C Ta = -40 .. +70 °C / -20 .. +70 °C
CE mark	EN 61000-6-1 / 2 / 3 / 4; EN 60079-0 / 1 / 31	
Vibration resistance acc. to DIN EN 60068-2-6 at 10 .. 500 Hz	≤ 10 g	
Protection class acc. to DIN EN 60529 ISO 20653	IP 69 IP 6K9K	
Other data		
Voltage supply	12 .. 30 V DC	
Residual ripple of supply voltage	Acc. to FSK Physical Layer Specification (HCF_SPEC_054)	
Current consumption	≤ 25 mA	
Weight	280 g (probe length 010), 315 g (probe length 050, 100), 350 g (probe length 250), 385 g (probe length 350)	

Note: Reverse polarity protection of the supply voltage, overvoltage, override and short circuit protection are provided.
FS (**F**ull **S**cale) = relative to complete measuring range
B.F.S.L. = **B**est **F**it **S**traight **L**ine

[1)] -25 °C with FKM seal, -40 °C on request
[2)] T120° with Ta = -40 .. 70 °C/-20 .. 70 °C with electrical connection single leads available

Measuring Range Limits:

By means of HART Common Practice Commands, you have the opportunity to adjust the following measuring range limits.
Measuring range limits of the primary variable, temperature:

Lower measuring range limit		Upper measuring range limit		Measuring span	
min	max	min	max	min	max
-25 °C	75 °C	0 °C	100 °C	25 °C	125 °C

Fields of application:

	Single leads Electrical connection "9"	Jacketed cable Electrical connection "G"
CSA	Explosionproof (seal not required)	
ATEX	Flameproof	
IECEx	Flameproof	
$_{c}$CSA$_{us}$	Class I Group A, B, C, D, T6, T5 Class II Group E, F, G Class III Type 4	
ATEX	I M2 Ex d I Mb II 2G Ex d IIC T6, T5 Gb	
	II 2D Ex tb IIIC T110 .. 120 °C Db	II 2D Ex tb IIIC T110 °C Db
IECEx	Ex d I Mb Ex d IIC T6, T5 Gb	
	Ex tb IIIC T110 .. 120 °C Db	Ex tb IIIC T110 °C Db

Dimensions:

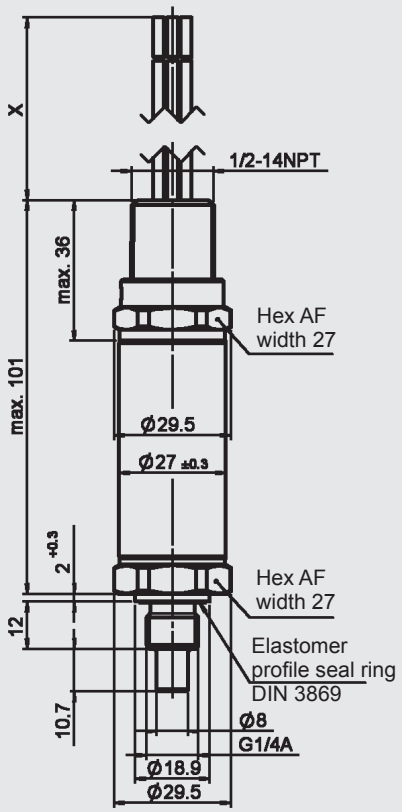

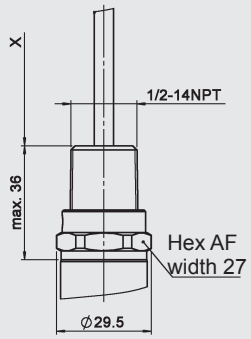

Probe length (Z)
10.7 mm
50 mm
100 mm
250 mm
350 mm

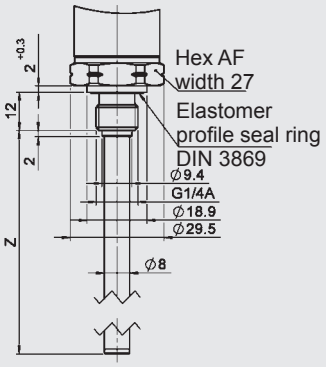

Model code:

ETS 4 1 4 X – F21 – XXX - D – 000 (2m)

Mechanical connection
4 = G1/4 A ISO 1179-2

Electrical connection
9 = 1/2-14 NPT Conduit, single leads
G = 1/2-14 NPT Conduit, jacketed cable

Output signal
F21 = 4 .. 20 mA, 2-conductor, with HART protocol

Probe length
010 = 10.7 mm
050 = 50 mm
100 = 100 mm
250 = 250 mm
350 = 350 mm

Approval
D = **CSA** Explosionproof (seal not required)
ATEX Flameproof
IECEx Flameproof

Modification number:
000 = standard

Cable length in m:
Standard = 2 m

Additional technical data with pressure measurement option:

Input data								
Measuring ranges	bar	16	40	60	100	250	400	600
Overload pressures	bar	32	80	120	200	500	800	1000
Burst pressure	bar	200	200	300	500	1000	2000	2000
Mechanical connection		G1/2 A ISO 1179-2 with probe						
Tightening torque, recommended		45 Nm						
Probe length		7 mm						
Output data								
Output signal Temperature		4 .. 20 mA with HART Protocol						
Output signal Pressure		available via HART protocol as a digital signal						
Accuracy acc. to DIN 16086, terminal based		≤ ± 0.25 % FS typ. ≤ ± 0.5 % FS max.						
Accuracy, B.F.S.L.		≤ ± 0.15 % FS typ. ≤ ± 0.25 % FS max.						
Temperature compensation Zero point		≤ ± 0.008 % / °C typ. ≤ ± 0.015 % / °C max.						
Temperature compensation Span		≤ ± 0.008 % / °C typ. ≤ ± 0.015 % / °C max.						
Non-linearity acc. to DIN 16086, terminal based		≤ ± 0.3 % FS max.						
Hysteresis		≤ ± 0.1 % FS max.						
Repeatability		≤ ± 0.05 % FS						
Long-term drift		≤ ± 0.1 % FS typ. / year						
Environmental conditions								
Compensated temperature range		-25 .. +85 °C						
Protection class acc. to DIN EN 60529 ISO 20653		IP 65 (Vented Gauge), IP 69 (Sealed Gauge) IP 6K9K (Sealed Gauge)						

Measuring range limits:

Additional measuring range limits of the secondary variable, pressure:

Lower measuring range limit		Upper measuring range limit		Measuring span	
min	max	min	max	min	max
0 % FS	112.5 % FS	37.5 % FS	150 % FS	37.5 % FS	150 % FS

Pin connections:

Conduit (single leads)

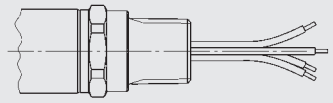

Lead	ETS 41x9
red	Signal +
black	Signal -
green-yellow	Housing

Conduit (jacketed cable)

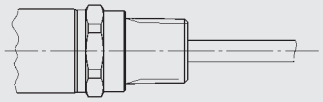

Lead	ETS 41xG
white	Signal -
brown	Signal +
green	n.c.
yellow	n.c.

Dimensions with pressure measurement option:

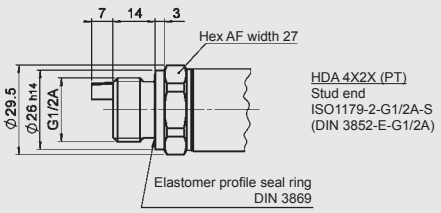

Model code with pressure measurement option:

ETS 4 1 2 X – F21 – 007 - P – XXXX - D X - 000 (2m)

Mechanical connection
2 = G1/2 A ISO 1179-2

Electrical connection
9 = 1/2-14 NPT Conduit, single leads
G = 1/2-14 NPT Conduit, jacketed cable

Output signal
F21 = 4 .. 20 mA, 2-conductor with HART protocol

Probe length
007 = 7 mm

With pressure measurement

Measuring ranges in bar
0016; 0040; 0060; 0100; 0250; 0400; 0600

Approval
D = **CSA** Explosionproof (seal not required)
ATEX Flameproof
IECEx Flameproof

Type of measurement cell:
S = Sealed Gauge (sealed to atmosphere) ≥ 40 bar
V = Vented Gauge (vented to atmosphere) < 40 bar

Modification number:
000 = standard

Cable length in m:
Standard = 2 m

Note:

The information in this brochure relates to the operating conditions and applications described.

For applications or operating conditions not described, please contact the relevant technical department.

Subject to technical modifications.

HYDAC ELECTRONIC GMBH
Hauptstraße 27, 66128 Saarbrücken
Germany
Telephone +49 (0)6897 509-01
Fax +49 (0)6897 509-1726
E-mail: electronic@hydac.com
Internet: www.hydac.com

Temperature Transmitter ETS 4100 Ex applications

Integrated temperature probe | **Accuracy 0.4 %**

Flameproof enclosure
ATEX, IECEx, CSA, triple approval
With junction box
HART interface
Optional pressure measurement

Description:

The ETS 4100 with HART interface is an electronic temperature transmitter in the ignition protection type having flameproof enclosure. The triple approval in accordance with ATEX, CSA and IECEx enables universal, worldwide utilisation of the devices in potentially explosive atmospheres.

Based on a silicon semiconductor device and corresponding evaluation electronics, the temperature sensor is designed to measure temperatures within a range of -25 .. +100 °C.

The sensor has an analogue output signal of 4 .. 20 mA available as standard to enable integration into modern controls. In addition to the analogue output of the measured value, digital communication is possible by means of the HART protocol.

The instrument provides the option of a pressure sensor. The pressure signal is given out as a digital signal via the HART protocol, the temperature signal is still available as an analogue signal (4 .. 20 mA) .

The main fields of application are in the oil & gas industry, e.g. in hydraulic power units, drill drives or valve actuation stations. The device is also used in mining applications as well as in locations with high dust contamination.

Protection types and applications:

$_{c}$CSA$_{us}$

Explosionproof - Seal not required
Class I Group B, C, D, T6, T5
Class II Group E, F, G
Class III
Type 4

ATEX

Flameproof
II 2G Ex d IIC T6, T5 Gb
II 2D Ex tb IIIC T110 .. 120 °C Db

IECEx

Flameproof
Ex d IIC T6, T5 Gb
Ex tb IIIC T110 .. 120 °C Db

Technical data:

Input data		
Measuring range	-25 .. +100 °C	
Probe lengths	10.7; 50; 100; 250; 350 mm	
Probe diameter	8 mm	
Pressure resistance	600 bar (probe length 10.7 mm) 125 bar (probe length ≥ 50 mm)	
Mechanical connection	G¼ A ISO 1179-2	
Tightening torque, recommended	20 Nm	
Parts in contact with fluid	Stainless steel: 1.4571; 1.4301 Seal: FKM	
Conduit / housing material	1.4435; 1.4404	
Output data		
Output signal, permitted load resistance	4 .. 20 mA, 2-conductor, with HART protocol $R_{Lmax.} = (U_B - 12\ V) / 20\ mA\ [k\Omega]$ for HART communication min. 250 Ω	
HART Communication	Acc. to HART 7 specifications	
HART Common Practice Commands i.e.	Altering of measuring range limits (see table)	
Accuracy (at room temperature)	≤ ± 0.4 % FS typ. ≤ ± 0.8 % FS max.	
Temperature drift (environment)	≤ ± 0.01 % FS / °C	
Response time acc. to DIN EN 60751	t_{50}: ~ 10 s t_{90}: ~ 15 s	
Environmental conditions		
Operating/ ambient temperature range [1)2)]	T6, T110 °C T5	Ta = -40 .. +60 °C / -20 .. +60 °C Ta = -40 .. +70 °C / -20 .. +70 °C
Storage temperature range	-40 °C .. +100 °C	
Fluid temperature range [1)2)]	T6, T110 °C T5	Ta = -40 .. +60 °C / -20 .. +60 °C Ta = -40 .. +70 °C / -20 .. +70 °C
CE mark	EN 61000-6-1/ 2/ 3/ 4; EN 60079-0/ 11/ 15/ 26/ 31	
Vibration resistance acc. to DIN EN 60068-2-6 at 10 .. 500 Hz	≤ 10 g	
Protection class acc. to DIN EN 60529 [3)]	IP 65	
Other data		
Supply voltage	12 .. 30 V DC	
Residual ripple of supply voltage	Acc. to FSK Physical Layer Specification (HCF_SPEC_054)	
Life expectancy	> 10 million cycles (0 .. 100 % FS)	
Weight	280 g (probe length 010), 315 g (probe length 050, 100), 350 g (probe length 250), 385 g (probe length 350)	

Note: Reverse polarity protection of the supply voltage, overvoltage, override and short circuit protection are provided.
FS (**F**ull **S**cale) = relative to complete measuring range
B.F.S.L. = **B**est **F**it **S**traight **L**ine

[1)] -25 °C with FKM seal, -40 °C on request
[2)] T120 °C with Ta = -40 .. +70 °C / -20 .. +70 °C with electrical connection, single leads possible
[3)] For mounted 1/2 NPT Conduit screwed fitting in corresponding protection class at junction box

Measuring Range Limits:

By means of HART Common Practice Commands, you have the opportunity to adjust the following measuring range limits.

Measuring range limits of the primary variable, temperature:

Lower measuring range limit		Upper measuring range limit		Measuring span	
min	max	min	max	min	max
-25 °C	75 °C	0 °C	100 °C	25 °C	125 °C

Fields of application:

	Junction box Aluminium "J"	Junction box Stainless steel "Q"
CSA	Explosionproof (seal not required)	
ATEX	Flameproof	
IECEx	Flameproof	
$_{c}$CSA$_{us}$	Class I Group B, C, D, T6, T5 Class II Group E, F, G Class III Type 4	Class I Group B, C, D, T6, T5 Class II Group E, F, G Type 4
ATEX	II 2G Ex d IIC T6, T5 Gb II 2D Ex tb IIIC T110 .. 120 °C Db	
IECEx	Ex d IIC T6, T5 Gb Ex tb IIIC T110 .. 120 °C Db	

Model code:

ETS 4 1 4 X – F21 – XXX - D – 000

Mechanical connection
4 = G1/4 A ISO 1179-2

Electrical connection
J = aluminium junction box
Q = stainless steel junction box

Output signal
F21 = 4 .. 20 mA, 2-conductor, with HART protocol

Probe length
010 = 10.7 mm
050 = 50 mm
100 = 100 mm
250 = 250 mm
350 = 350 mm

Approval
D = **CSA** Explosionproof (seal not required)
ATEX Flameproof
IECEx Flameproof

Modification number
000 = standard

Dimensions:

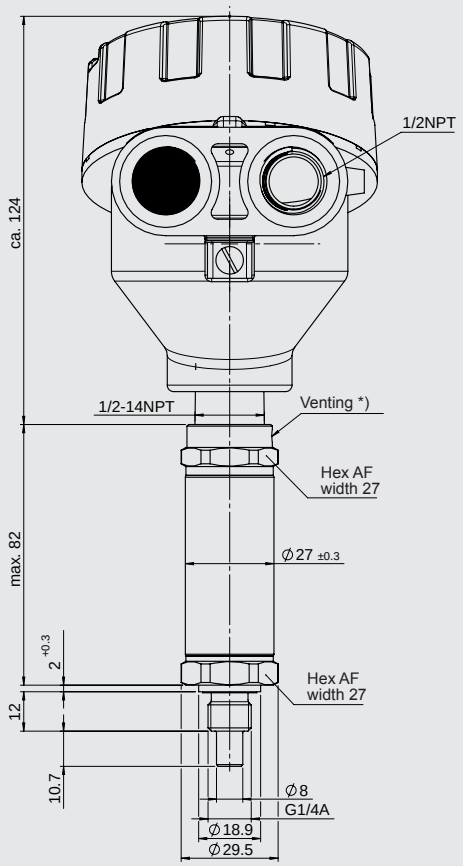

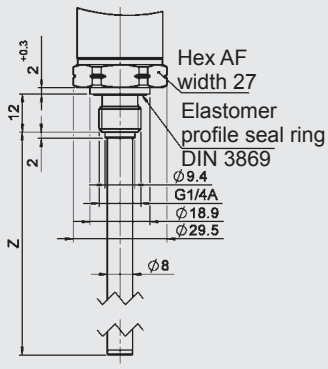

Probe length (Z)
50 mm
100 mm
250 mm
350 mm

Pin connections:

Single leads in junction box

Lead	ETS 41XX
red	Signal +
black	Signal -
green-yellow	Housing

Dimensions with pressure measurement option:

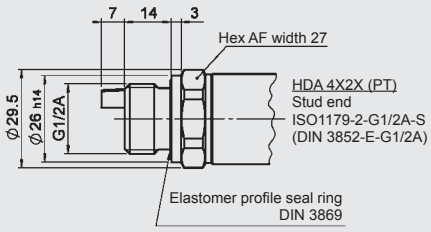

Additional technical data with pressure measurement option:

Input data								
Measuring ranges	bar	16	40	60	100	250	400	600
Overload pressures	bar	32	80	120	200	500	800	1000
Burst pressure	bar	200	200	300	500	1000	2000	2000
Mechanical connection		G1/2 A ISO 1179-2 with probe						
Tightening torque, recommended		45 Nm						
Probe length		7 mm						
Output data								
Output signal Temperature		4 .. 20 mA with HART Protocol						
Output signal Pressure		available via HART protocol as a digital signal						
Accuracy acc. to DIN 16086, terminal based		≤ ± 0.25 % FS typ. ≤ ± 0.5 % FS max.						
Accuracy, B.F.S.L.		≤ ± 0.15 % FS typ. ≤ ± 0.25 % FS max.						
Temperature compensation Zero point		≤ ± 0.008 % FS / °C typ. ≤ ± 0.015 % FS / °C max.						
Temperature compensation Span		≤ ± 0.008 % FS / °C typ. ≤ ± 0.015 % FS / °C max.						
Non-linearity acc. to DIN 16086, terminal based		≤ ± 0.3 % FS max.						
Hysteresis		≤ ± 0.1 % FS max.						
Repeatability		≤ ± 0.05 % FS						
Long-term drift		≤ ± 0.1 % FS typ. / year						
Environmental conditions								
Compensated temperature range		-25 .. +85 °C						

Measuring range limits:

Additional measuring range limits of the secondary variable, pressure:

Lower measuring range limit		Upper measuring range limit		Measuring span	
min	max	min	max	min	max
0 % FS	112.5 % FS	37.5 % FS	150 % FS	37.5 % FS	150 % FS

Model code with pressure measurement option:

ETS 4 1 2 X – F21 – 007 - P – XXXX - D X - 000

Mechanical connection
2 = G1/2 A ISO 1179-2

Electrical connection
J = aluminium junction box
Q = stainless steel junction box

Output signal
F21 = 4 .. 20 mA, 2-conductor, with HART protocol

Probe length
007 = 7 mm

With pressure measurement

Measuring ranges in bar
0016; 0040; 0060; 0100; 0250; 0400; 0600

Approval
D = **CSA** Explosionproof (seal not required)
ATEX Flameproof
IECEx Flameproof

Type of measurement cell:
S = Sealed Gauge (sealed to atmosphere) ≥ 40 bar
V = Vented Gauge (vented to atmosphere) < 40 bar

Modification number:
000 = standard

Note:

The information in this brochure relates to the operating conditions and applications described.

For applications or operating conditions not described, please contact the relevant technical department.

Subject to technical modifications.

HYDAC ELECTRONIC GMBH
Hauptstraße 27, 66128 Saarbrücken
Germany
Telephone +49 (0)6897 509-01
Fax +49 (0)6897 509-1726
E-mail: electronic@hydac.com
Internet: www.hydac.com

Temperature Transmitter ETS 4100 Ex applications

Integrated temperature probe | **Accuracy 0.4 %**

Intrinsically Safe, Dustproof enclosure
Non-Sparking,
ATEX, IECEx, double approval
HART interface
Optional pressure measurement

Description:

The ETS 4100 with HART interface is an intrinsically safe electronic temperature transmitter for monitoring of temperature in hydraulic systems.

The double approval in accordance with ATEX and IECEx enables universal, almost worldwide utilisation of the devices in potentially explosive atmospheres.

Based on a silicon semiconductor device and corresponding evaluation electronics, the temperature sensor is designed to measure temperatures within a range of -25 °C .. +100 °C.

In addition to the analogue 4 .. 20 mA output of the measured value, digital communication is possible by means of the HART protocol.

The instrument provides the option of a pressure sensor. The pressure signal is given out as a digital signal via the HART protocol and the temperature signal is still available as an analogue signal (4 .. 20 mA).

The main fields of application are in the oil & gas industry, gas turbines. The device is also used in mining applications as well as in locations with high dust contamination.

Protection types and applications:

ATEX

I M1	Ex ia	I	Ma
II 1G	Ex ia	IIC	T6,T5 Ga
II 1/2G	Ex ia	IIC	T6,T5 Ga/Gb
II 2G	Ex ia	IIC	T6,T5 Gb
II 1D	Ex ia	IIIC	T85 °C/T95 °C Da
II 1D	Ex ta	IIIC	T80/90/100 °C T_{500}90/ T_{500}100/ T_{500}110 °C Da
II 2D	Ex tb	IIIC	T80/T90/T100 °C Db
II 3G	Ex nA	IIC	T6, T5, T4 Gc
II 3G	Ex ic	IIC	T6, T5, T4 Gc
II 3D	Ex tc	IIIC	T80/T90/T100 °C Dc
II 3D	Ex ic	IIIC	T80/T90/T100 °C Dc

IECEx

Ex ia	I	Ma
Ex ia	IIC	T6,T5 Ga
Ex ia	IIC	T6,T5 Ga/Gb
Ex ia	IIC	T6,T5 Gb
Ex ia	IIIC	T85/T95 °C Da
Ex ta	IIIC	T80/T90/T100 °C Da T_{500}90/T_{500}100/T_{500}110 °C Da
Ex tb	IIIC	T80/T90/T100 °C Db
Ex nA	IIC	T6,T5,T4 Gc
Ex ic	IIC	T6,T5,T4 Gc
Ex tc	IIIC	T80/T90/T100 °C Dc
Ex ic	IIIC	T80/T90/T100 °C Dc

Technical data:

Input data		
Measuring range	-25 .. +100 °C	
Probe lengths	10.7; 50; 100; 250; 350 mm	
Probe diameter	8 mm	
Pressure resistance	600 bar (probe length 10.7 mm) 125 bar (probe length ≥ 50 mm)	
Mechanical connection	G1/4 A ISO 1179-2	
Tightening torque, recommended	20 Nm	
Parts in contact with fluid	Stainless steel: 1.4571; 1.4301 Seal: FKM	
Output data		
Output signal, permitted load resistance	4 .. 20 mA, 2-conductor, with HART protocol $R_{Lmax.}=(U_B - 12\ V) / 20\ mA\ [k\Omega]$ for HART communication min. 250 Ω	
HART Communication	Acc. to HART 7 specifications	
HART Common Practice Commands i.e.	Altering of measuring range limits (see table)	
Accuracy (at room temperature)	≤ ± 0.4 % FS typ. ≤ ± 0.8 % FS max.	
Temperature drift (environment)	≤ ± 0.01 % FS / °C	
Response time acc. to DIN EN 60751	t_{50}: ~ 10 s t_{90}: ~ 15 s	
Environmental conditions		
Operating/ambient/ fluid temperature range [1) 2)]	T6, T80/T85 °C, T_{500}90 °C T5, T90/T95 °C, T_{500}100 °C T100, T_{500}110 °C T4	Ta = -40 .. +60 °C / -20 .. +60 °C Ta = -40 .. +70 °C / -20 .. +70 °C Ta = -40 .. +80 °C / -20 .. +80 °C Ta = -40 .. +85 °C / -20 .. +85 °C
Storage temperature range	-40 °C .. +100 °C	
CE mark	EN 61000-6-1 / 2 / 3 / 4; EN 60079-0 / 11 / 15 / 26 / 31; EN 50303	
Vibration resistance acc. to DIN EN 60068-2-6 at 10 .. 500 Hz	≤ 20 g	
Protection class acc. to DIN EN 60529 [3)]	IP 67	
Relevant data for Ex applications	**EX ia, ic**	**Ex nA, ta, tb,tc**
Supply voltage	12 .. 28 V DC	12 .. 28 V DC
Max. input current	Ii = 100 mA	
Max. input power	Pi = 0.7 W	Max. power consumption ≤ 1W
Connection capacitance of the sensor	Ci = ≤ 22 nF	
Inductance of the sensor	Li = 0 mH	
Insulation voltage	50 V AC, with integrated overvoltage protection acc. to EN 61000-6-2	
Other data		
Residual ripple of supply voltage	Acc. to FSK Physical Layer Specification (HCF_SPEC_054)	
Current consumption	≤ 25 mA	
Weight	~ 280 g (probe length 010) ~ 315 g (probe length 050,100) ~ 350 g (probe length 250) ~ 385 g (probe length 350)	

Note: Reverse polarity protection of the supply voltage, overvoltage, override and short circuit protection are provided.
FS (**F**ull **S**cale) = relative to complete measuring range
B.F.S.L. = **B**est **F**it **S**traight **L**ine

1) -20 °C with FKM seal, -40 °C on request
2) With M12x1 male connector, only up to -25 °C
3) With mounted mating connector in corresponding protection class

Measuring range limits:

By means of HART Common Practice Commands, you have the opportunity to adjust the following measuring range limits:
Measuring range limits of the primary variable, temperature:

Lower measuring range limit		Upper measuring range limit		Measuring span	
min	max	min	max	min	max
-25 °C	75 °C	0 °C	100 °C	25 °C	125 °C

Fields of application:

Code no. for use in model code	1			9	A	C
ATEX DEKRA 13ATEX0031X DEKRA 13ATEX0032	I M1 Ex ia I Ma	II 1G Ex ia IIC T6,T5 Ga II 1/2G Ex ia IIC T6,T5 Ga/Gb II 1D Ex ia IIIC T85/T95 °C Da	II 2G Ex ia IIC T6,T5 Gb	II 3G Ex nA IIC T6,T5 Gc	II 1D Ex ta IIIC T80/T90 °C T_{500}90/T_{500}100 °C Da II 2D Ex tb IIIC T80/T90 °C Db	II 3G Ex ic IIC T6,T5 Gc II 3D Ex ic IIIC T80/T90 °C Dc
IECEx DEK 14.0011X	Ex ia I Ma	Ex ia IIC T6,T5 Ga Ex ia IIC T6,T5 Ga/Gb Ex ia IIIC T85/T95 °C Da	Ex ia IIC T6,T5 Gb	Ex nA IIC T6,T5 Gc	Ex ta IIIC T80/T90 °C T_{500}90/T_{500}100 °C Da Ex tb IIIC T80/T90 °C Db	Ex ic IIC T6,T5 Gc Ex ic IIIC T80/T90 °C Dc
Application fields	Mining Protection type: intrinsically safe ia with barrier	Gases/conductive dust Protection type: intrinsically safe ia with barrier	Gases Protection type: intrinsically safe ia with barrier	Gases Protection type: non-sparking nA	Conductive dust Protection type: dustproof enclosure	Gases/conductive dust Protection type: Intrinsically safe ic with barrier
Electrical connection (see model code)	5, 6	5, 6	5, 6	6	6	5, 6

Instruments for other protection types and zones (see cover) are available upon request.

Dimensions:

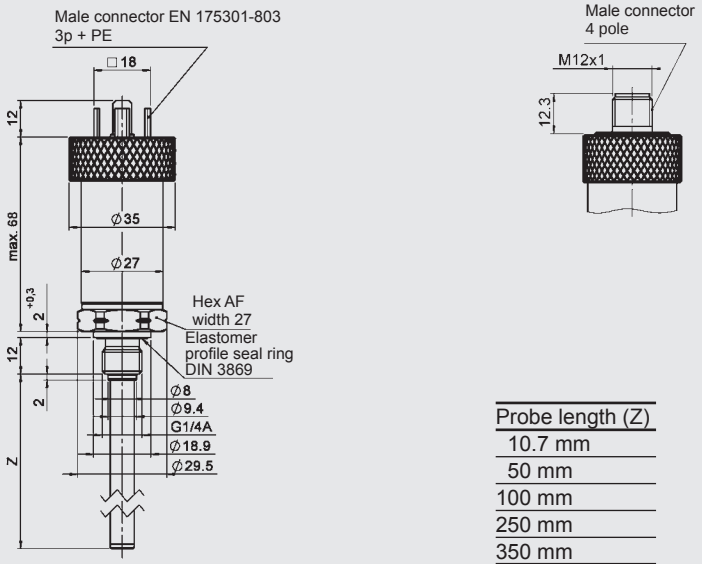

Probe length (Z)
10.7 mm
50 mm
100 mm
250 mm
350 mm

With impact protection metal safety sleeve:

Protection types and applications (code): 9,A
The impact protection metal safety sleeve is included. A straight mating connector is required for electrical connection. E.g. mating connector M12x1, 4 pole, straight, with 3 m shielded cable: ZBE 06S-03, part no. 6098243

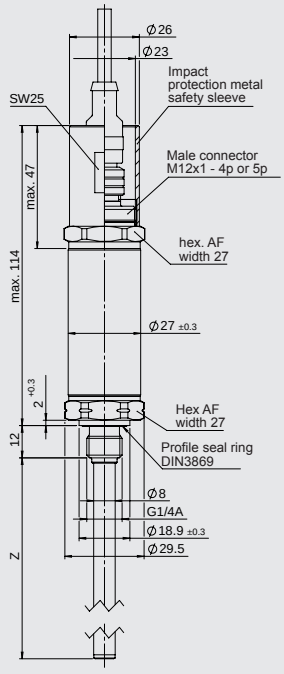

Model code:

ETS 4 1 X X – F21 – XXX – E N X – 000

Mechanical connection
4 = G1/4 A ISO 1179-2

Electrical connection
5 = male, EN 175301-803, 3 pole+PE
(IP 67 mating connector supplied)
6 = male M12x1, 4 pole

Output signal
F21 = 4 .. 20 mA, 2-conductor, with HART protocol

Probe lengths
010 = 10.7 mm
050 = 50 mm
100 = 100 mm
250 = 250 mm
350 = 350 mm

Approval
E = **ATEX; IECEx**

Insulation voltage:
N = 50 V AC to housing

Protection types and applications (code)

	ATEX				IECEx		
1 =	I M1	Ex ia	I	Ma	Ex ia	I	Ma
	II 1G	Ex ia	IIC	T6,T5 Ga	Ex ia	IIC	T6,T5 Ga
	II 1/2 G	Ex ia	IIC	T6,T5 Ga/Gb	Ex ia	IIC	T6,T5 Ga/Gb
	II 2 G	Ex ia	IIC	T6,T5 Gb	Ex ia	IIC	T6,T5 Gb
	II 1D	Ex ia	IIIC	T85 °C/T95 °C Da	Ex ia	IIIC	T85 °C/T95 °C Da
9 =	II 3G	Ex nA	IIC	T6, T5 Gc	Ex nA	IIC	T6, T5 Gc
	Only in conjunction with electrical connection "6" and the impact protection metal safety sleeve (see dimensions)						
A =	II 1D	Ex ta	IIIC	T80/T90 °C T_{500}90/ T_{500}100 Da	Ex ta	IIIC	T80/T90 °C Da T_{500}90/ T_{500}100 °C Da
	II 2D	Ex tb	IIIC	T80/T90 °C Db	Ex tb	IIIC	T80/T90 °C Db
	Only in conjunction with electrical connection "6" and the impact protection metal safety sleeve (see dimensions)						
C =	II 3G	Ex ic	IIC	T6, T5 Gc	Ex ic	IIC	T6, T5 Gc
	II 3D	Ex ic	IIIC	T80/T90 °C Dc	Ex ic	IIIC	T80/T90 °C Dc

Modification number
000 = standard

Accessories:
Appropriate accessories, such as mating connectors, can be found in the Accessories brochure.

Additional technical data with pressure measurement option:

Input data								
Measuring ranges	bar	16	40	60	100	250	400	600
Overload pressures	bar	32	80	120	200	500	800	1000
Burst pressure	bar	200	200	300	500	1000	2000	2000
Mechanical connection		G1/2 A ISO 1179-2 with probe						
Tightening torque, recommended		45 Nm						
Probe length		7 mm						
Output data								
Output signal Temperature		4 .. 20 mA with HART Protocol						
Output signal Pressure		available via HART protocol as a digital signal						
Accuracy acc. to DIN 16086, terminal based		≤ ± 0.25 % FS typ. ≤ ± 0.5 % FS max.						
Accuracy, B.F.S.L.		≤ ± 0.15 % FS typ. ≤ ± 0.25 % FS max.						
Temperature compensation Zero point		≤ ± 0.008 % / °C typ. ≤ ± 0.015 % / °C max.						
Temperature compensation Span		≤ ± 0.008 % / °C typ. ≤ ± 0.015 % / °C max.						
Non-linearity acc. to DIN 16086, terminal based		≤ ± 0.3 % FS max.						
Hysteresis		≤ ± 0.1 % FS max.						
Repeatability		≤ ± 0.05 % FS						
Long-term drift		≤ ± 0.1 % FS typ. / year						
Environmental conditions								
Compensated temperature range		-25 .. +85 °C						

Measuring range limits:

Additional measuring range limits of the secondary variable, pressure:

Lower measuring range limit		Upper measuring range limit		Measuring span	
min	max	min	max	min	max
0 % FS	112.5 % FS	37.5 % FS	150 % FS	37.5 % FS	150 % FS

Pin connections:

EN 175301-803

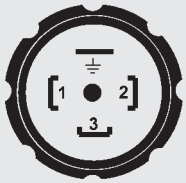

Pin	ETS 4xx5-F21
1	Signal +
2	Signal -
3	n.c.
⊥	PE

M12x1

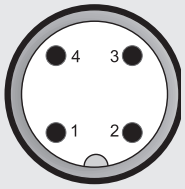

Pin	ETS 4xx6-21
1	Signal +
2	n.c.
3	Signal -
4	n.c.

Dimensions with pressure measurement option:

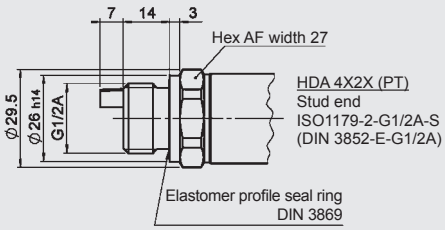

Model code with temperature measurement option:

ETS 4 1 2 X – F21 – 007 – P – XXXX – E N X – XXX

Mechanical connection
2 = G1/2 A ISO 1179-2

Electrical connection
5 = male EN 175301-803, 3 pole+PE,
6 = male M12x1, 4 pole

Output signal
F21 = 4 .. 20 mA, 2-conductor, with HART protocol

Probe length
007 = 7 mm

With pressure measurement

Measuring ranges in bar
0016; 0040; 0060; 0100; 0250; 0400; 0600

Approval
E = **ATEX**
IECEx

Insulation voltage
N = 50 V AC to housing

Protection types and applications (code)

	ATEX				IECEx		
1 =	I M1	Ex ia	I	Ma	Ex ia	I	Ma
	II 1G	Ex ia	IIC	T6,T5 Ga	Ex ia	IIC	T6,T5 Ga
	II 1/2 G	Ex ia	IIC	T6,T5 Ga/Gb	Ex ia	IIC	T6,T5 Ga/Gb
	II 2 G	Ex ia	IIC	T6,T5 Gb	Ex ia	IIC	T6,T5 Gb
	II 1D	Ex ia	IIIC	T85 °C/T95 °C Da	Ex ia	IIIC	T85 °C/T95 °C Da
9 =	II 3G	Ex nA	IIC	T6, T5 Gc	Ex nA	IIC	T6, T5 Gc
	Only in conjunction with electrical connection "6" and the impact protection metal safety sleeve (see dimensions)						
A =	II 1D	Ex ta	IIIC	T80/T90 °C Da T_{500}90/ T_{500}100 °C Da	Ex ta	IIIC	T80/T90 °C Da T_{500}90/ T_{500}100 °C Da
	II 2D	Ex tb	IIIC	T80/T90 °C Db	Ex tb	IIIC	T80/T90 °C Db
	Only in conjunction with electrical connection "6" and the impact protection metal safety sleeve (see dimensions)						
C =	II 3G	Ex ic	IIC	T6, T5 Gc	Ex ic	IIC	T6, T5 Gc
	II 3D	Ex ic	IIIC	T80/T90 °C Dc	Ex ic	IIIC	T80/T90 °C Dc

Modification number:
000 = standard

Note:

The information in this brochure relates to the operating conditions and applications described.

For applications or operating conditions not described, please contact the relevant technical department.

Subject to technical modifications.

HYDAC ELECTRONIC GMBH
Hauptstraße 27, 66128 Saarbrücken
Germany
Telephone +49 (0)6897 509-01
Fax +49 (0)6897 509-1726
E-mail: electronic@hydac.com
Internet: www.hydac.com

Page

GENERAL APPLICATIONS

ETS 1700	Display		For separ. temperature probe		257
ETS 320	Display		Pressure-resistant		259
ETS 380	Display		For separ. temperature probe		261
ETS 3200	Display		Pressure-resistant		263
ETS 3800	Display		For separ. temperature probe		267
HTS 8000				OEM	271
ETS 3200	Display	IO-Link	Pressure-resistant		273
ETS 3800	Display	IO-Link	For separ. temperature probe		275
TFP 100	Temperature probe				277

Temperature Switch ETS 1700

Separate temperature probe | Display

4 switching outputs
Analogue output

Description:

The electronic temperature switch ETS 1700 is used mainly together with the temperature probe TFP 100, which was specially developed for tank mounting.

The 4-digit display can indicate the actual temperature, one of the switch points or the maximum temperature value.

The maximum temperature indicates the highest temperature which has occurred since the unit was switched on or was last reset.

The four switching outputs can be used to control heating and cooling processes in hydraulic systems, for example. Four switch and switch-back points which are independent of each other can be adjusted very simply via the key pad.

For integration into monitoring systems (e.g. with PLC), an analogue output (4 .. 20 mA or 0 .. 10 V) is also available.

Technical data:

Input data	
Measuring element	PT 100 (TFP 100)
Connection, separate temperature probe	Male connector 5 pole Binder series 423/723
Measuring range [1]	0 .. +100 °C (+32 .. +212 °F)
Output data	
Switching outputs	4 relays with change-over contacts in 2 groups (common supply of each group connected) Switching current: 0.01 .. 2 A per switching output Switching voltage: 0.1 .. 250 V AC, 12 .. 32 V DC Switching capacity: 500 VA, 64 W (for inductive load, use varistors) Switching cycles (ohmic resistance): ≥ 20 million at minimum load ≥ 400000 at maximum load (typ.)
Analogue output, permitted load resistance	Selectable: 4 .. 20 mA load resist. max. 400 Ω 0 .. 10 V load resist. min. 2 kΩ corresponds in each case to 0 .. +100 °C
Accuracy (at room temperature)	≤ ± 1.0 °C (≤ ± 2.0 °F) (+error separate temperature probe)
Temperature drift (environment)	≤ ± 0.03 % FS / °C
Repeatability	≤ ± 0.25 % FS
Environmental conditions	
Operating temperature range	-25 .. +60 °C
Storage temperature range	-40 .. +80 °C
CE mark	EN 61000-6-1 / 2 / 3 / 4
Vibration resistance acc. to DIN EN 60068-2-6 (0 .. 500 Hz)	≤ 5 g
Shock resistance acc. to DIN EN 60068-2-27 (1 ms)	≤ 10 g
Protection class acc. to DIN EN 60529	IP 65
Other data	
Electrical connection	Plug-in terminal block, 14 pole
Supply voltage	22 .. 32 V DC
Residual ripple of supply voltage	≤ 10 %
Current consumption	~ 200 mA
Display	4-digit, LED, 7-segment, red, height of digits 13 mm
Weight	~ 800 g

Note: Reverse polarity protection of the supply voltage, overvoltage, override and short circuit protection are provided.
FS (**F**ull **S**cale) = relative to complete measuring range

[1] Depending on the fluid temperature range of the connected temperature sensor, the measuring range of the ETS 1700 may be reduced.

Setting options:

The microprocessor integrated into the ETS 1700 enables many useful extra functions in addition to the switching functions, when compared with a normal mechanical temperature switch. It is possible, for example, to activate switching delay times or to change the relay switching direction. All settings are made via the key pad.

Setting ranges of the switch points and switch-back hystereses:

- Switch point, relay 1 .. 4:
  1.5 .. 100 % of the measuring span
- Switch-back point, relay 1 .. 4:
  1 .. 99 % of the measuring span or alternatively
- Switch-back hysteresis 1 .. 4:
  1 .. 99 % of the measuring span

Additional functions:

- Switching direction of the relays 1 .. 4 (N/C or N/O function)
- Switch-on delay, relays 1 .. 4 in the range 0.0 .. 900.0 seconds
- Switch-off delay, relays 1 .. 4 in the range 0.0 .. 900.0 seconds
- Switch-back mode (alternatively switch-back point or switch-back hysteresis)
- Display of the actual temperature, a switch point or the peak value
- Measuring range individually selectable in °C or °F
- Display of the measurement unit (°C, °F)
- Analogue output (4 .. 20 mA or 0 .. 10 V)
- Programming lock

Terminal assignment:

Device connection

Pin	
1	$+U_B$
2	0 V
3	Analogue output Signal +
4	Analogue output Signal - (0 V)
5	Relay 1 N/C
6	Relay 1 N/O
7	Centre relay 1 and 2
8	Relay 2 N/C
9	Relay 2 N/O
10	Relay 3 N/C
11	Relay 3 N/O
12	Centre relay 3 and 4
13	Relay 4 N/C
14	Relay 4 N/O

Probe connection

Pin	
1	$+U_B$
2	Signal +
3	n.c.
4	Signal -
5	0 V

Dimensions:

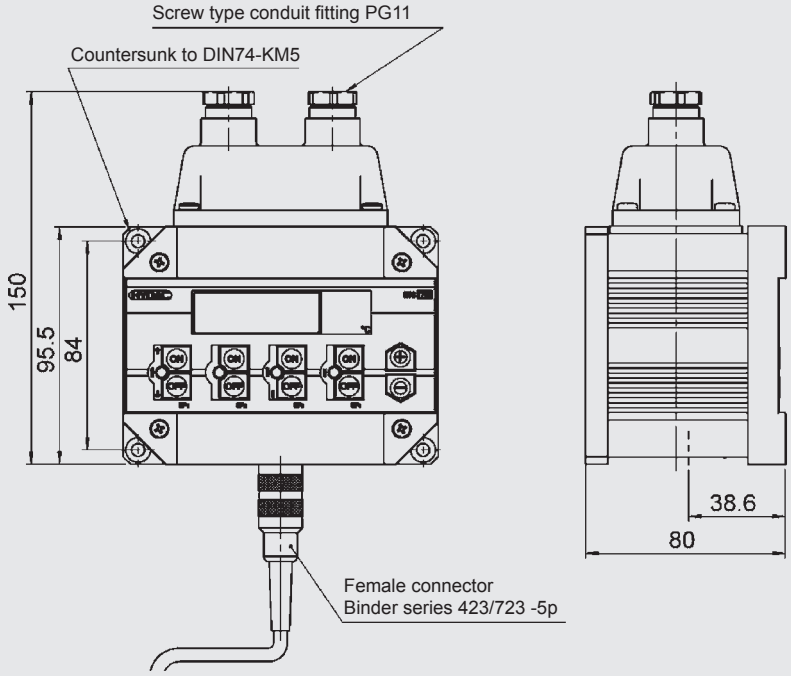

Model code:

ETS 1 7 0 X – 100 – 000

Type of sensor
0 = for PT 100 sensors

Display
1 = 4-digit display °C
2 = 4-digit display °F

Measuring range
0 .. +100 °C (+32 .. +212 °F)

Modification number
000 = standard

Accessories (supplied with instrument):
5 pole mating connector (Binder series 423/723 or Amphenol series C091A) to connect the separate temperature probe and a 3 m sensor cable (LIYCY 4 x 0.25 mm^2)

Accessories available (not supplied with instrument**)**

Vibration mounts	Part no.: 257492

Separate temperature probe:

● TFP 104 - 000	with male 4 pole, Binder series 714 M18 (including mating connector)	Part no. 904696
● TFP 106 - 000	with male 4 pole M12x1 (mating connector not included)	Part no.: 921330
● Tank installation sleeve for TFP 100		Part no.: 906170

More detailed information on accessories can be found in the Accessories brochure.

Note:

The information in this brochure relates to the operating conditions and applications described.

For applications or operating conditions not described, please contact the relevant technical department.

Subject to technical modifications.

HYDAC ELECTRONIC GMBH
Hauptstraße 27, 66128 Saarbrücken
Germany
Telephone +49 (0)6897 509-01
Fax +49 (0)6897 509-1726
E-mail: electronic@hydac.com
Internet: www.hydac.com

Temperature Switch ETS 320

Integrated temperature probe | Display

Up to 2 switching outputs
Analogue output

Description:

The ETS 320 is a compact electronic temperature switch with a 3-digit display.

Pressure-resistant to 600 bar with an integrated 18 mm temperature probe, this model can be installed directly inline or on the hydraulic block and has a measuring range of -25 .. +100 °C.

Different output models with one or two switching outputs, and with the possible option of an additional 4 .. 20 mA analogue output signal, offer a variety of application possibilities.

The switch points and the associated hystereses can be adjusted very quickly and easily using the key pad.

For optimum adaptation to the particular application, the instrument has many additional adjustment parameters (e.g. switching delay times, N/C / N/O function).

Technical data:

Input data	
Measuring range	-25 .. +100 °C (-13 .. +212 °F)
Probe length	18 mm
Probe diameter	6 mm
Pressure resistance	600 bar
Mechanical connection	G1/2 A ISO 1179-2
Tightening torque, recommended	45 Nm
Parts in contact with fluid	Mech. connection: Stainless steel Seal: FKM
Output data	
Switching outputs	1 or 2 PNP transistor outputs Switching current: max. 1.2 A per switching output Switching cycles: > 100 million
Analogue output, permitted load resistance	4 .. 20 mA; load resist. max. 400 Ω corresponds to -25 .. +100 °C
Accuracy (at room temperature)	≤ ± 1.0 °C (≤ ± 2.0 °F)
Temperature drift (environment)	≤ ± 0.015 % FS / °C max.
Response time acc. to DIN EN 60751	t_{50}: 3 s t_{90}: 9 s
Repeatability	≤ ± 0.5 % FS max.
Environmental conditions	
Operating temperature range	-25 .. +80 °C (-13 .. +176 °F)
Storage temperature range	-40 .. +80 °C (-40 .. +176 °F)
CE mark	EN 61000-6-1 / 2 / 3 / 4
Vibration resistance acc. to DIN EN 60068-2-6 (0 .. 500 Hz)	≤ 10 g
Shock resistance acc. to DIN EN 60068-2-27 (11 ms)	≤ 50 g
Protection class acc. to DIN EN 60529 [1)]	IP 65
Other data	
Supply voltage	20 .. 32 V DC
Residual ripple of supply voltage	≤ 5 %
Current consumption	~ 100 mA without switching output
Display	3-digit, LED, 7-segment, red, height of digits 8.4 mm
Weight	~ 300 g

Note: Reverse polarity protection of the supply voltage, overvoltage, override and short circuit protection are provided.
FS (**F**ull **S**cale) = relative to complete measuring range

[1)] With mounted mating connector in corresponding protection class

Setting options:

All settings available on the ETS 320 are grouped in two easy-to-navigate menus. In order to prevent unauthorised adjustment of the device, a programming lock can be set.

Setting ranges of the switch points and switch-back hystereses:

Switch point function

Unit	Switch point	Hysteresis	Incre-ment*
°C	-22.0 .. 100.0	1.0 .. 123.0	1.0
°F	-10.0 .. 212.0	1.0 .. 223.0	1.0

Window function

Unit	Lower switch value	Upper switch value	Incre-ment*
°C	-23.0 .. 99.0	-22.0 .. 100.0	1.0
°F	-11.0 .. 211.0	-10.0 .. 212.0	1.0

* All ranges given in the table can be adjusted by the increments shown.

Additional functions:

- Switching mode of the switching outputs adjustable (switch point function or window function)
- Switching direction of the switching outputs adjustable (N/C or N/O function)
- Switch-on and switch-off delay adjustable from 0 .. 750 seconds
- Choice of display (actual temperature, peak temperature, switch point 1, switch point 2, display off)

Pin connections:

M12x1, 4 pole

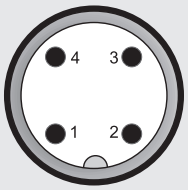

Pin	ETS 326-2	ETS 326-3
1	$+U_B$	$+U_B$
2	SP2	Analogue
3	0 V	0 V
4	SP1	SP1

M12x1, 5 pole

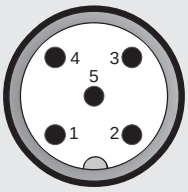

Pin	ETS 328-5
1	$+U_B$
2	Analogue
3	0 V
4	SP1
5	SP2

Dimensions:

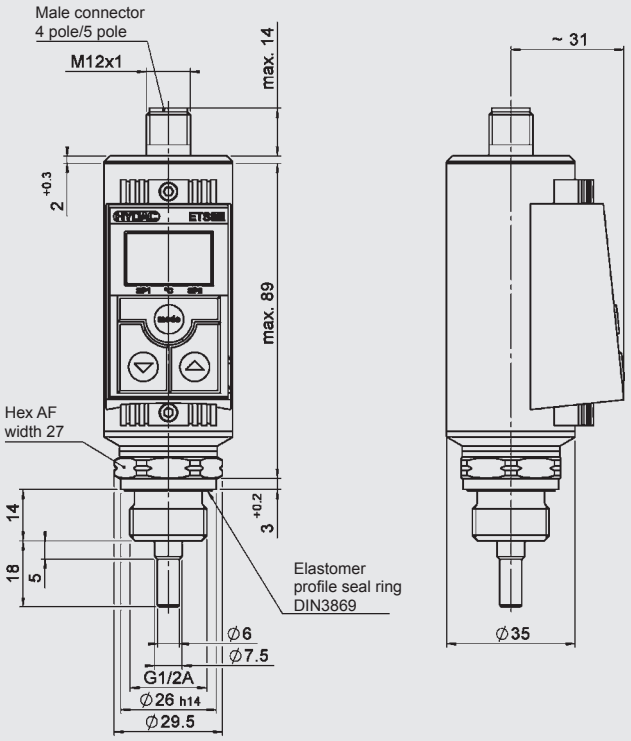

Model code:

ETS 3 2 X – X – 100 – X00

Mechanical connection
2 = G1/2 A ISO 1179-2

Electrical connection
6 = male M12x1, 4 pole
only possible on output models “2” and “3”
8 = male M12x1, 5 pole
only possible on output model “5”

Output
2 = 2 switching outputs
only in conjunction with electrical connection type “6”

3 = 1 switching output and 1 analogue output
only in conjunction with electrical connection type “6”

5 = 2 switching outputs and 1 analogue output
only in conjunction with electrical connection type “8”

Measuring range
-25 .. +100 °C (-13 .. +212 °F)

Modification number
000 = display in °C
400 = display in °F

Accessories:
Appropriate accessories, such as mating connectors and clamps for wall-mounting etc., can be found in the Accessories brochure.

Note:

The information in this brochure relates to the operating conditions and applications described.

For applications or operating conditions not described, please contact the relevant technical department.

Subject to technical modifications.

HYDAC ELECTRONIC GMBH
Hauptstraße 27, 66128 Saarbrücken
Germany
Telephone +49 (0)6897 509-01
Fax +49 (0)6897 509-1726
E-mail: electronic@hydac.com
Internet: www.hydac.com

Temperature Switch ETS 380

Separate temperature probe | **Display**

Up to 2 switching outputs
Analogue output

Description:

The ETS 380 is a compact electronic temperature switch with a 3-digit display.

The version for a separate temperature probe has a measuring range of -30 .. +150 °C and is used primarily with the TFP 100 temperature probe which was specially developed for tank installation.

It is also possible, however, to evaluate commonly available PT 100 temperature probes. Different output models with one or two switching outputs, and with the possible option of an additional 4 .. 20 mA analogue output signal, offer a variety of application possibilities.

The switch points and the associated hystereses can be adjusted very quickly and easily using the key pad.

For optimum adaptation to the particular application, the instrument has many additional adjustment parameters (e.g. switching delay times, N/C / N/O function).

Technical data:

Input data	
Measuring element	PT 100 (TFP 100)
Connection, separate temperature probe	Female cable connector M12x1, 4 pole
Measuring range [1]	-30 .. +150 °C (-22 .. +302 °F)
Output data	
Switching outputs	1 or 2 PNP transistor outputs Switching current: max. 1.2 A per switching output Switching cycles: > 100 million
Analogue output, permitted load resistance	4 .. 20 mA; load resist. max. 400 Ω corresponds to -30 .. +150 °C
Accuracy (at room temperature)	≤ ± 1.0 °C (≤ ± 2.0 °F) (+error separate temperature probe)
Temperature drift (environment)	≤ ± 0.015 % FS / °C max.
Repeatability	≤ ± 0.5 % FS max.
Environmental conditions	
Operating temperature range	-25 .. +80 °C (-13 .. +176 °F)
Storage temperature range	-40 .. +80 °C (-40 .. +176 °F)
CE mark	EN 61000-6-1 / 2 / 3 / 4
Vibration resistance acc. to DIN EN 60068-2-6 (0 .. 500 Hz)	≤ 10 g
Shock resistance acc. to DIN EN 60068-2-27 (11 ms)	≤ 50 g
Protection class acc. to DIN EN 60529 [2]	IP 65
Other data	
Supply voltage	20 .. 32 V DC
Residual ripple of supply voltage	≤ 5 %
Current consumption	~ 100 mA without switching output
Display	3-digit, LED, 7-segment, red, height of digits 8.4 mm
Weight	~ 300 g

Note: Reverse polarity protection of the supply voltage, overvoltage, override and short circuit protection are provided.
FS (**F**ull **S**cale) = relative to complete measuring range

[1] Depending on the fluid temperature range of the connected temperature sensor, the measuring range of the ETS 380 may be reduced.

[2] With mounted mating connector in corresponding protection class

Setting options:

All settings available on the ETS 380 are grouped in two easy-to-navigate menus. In order to prevent unauthorised adjustment of the device, a programming lock can be set.

Setting ranges of the switch points and switch-back hystereses:

Switch point function

Unit	Switch point	Hysteresis	Increment*
°C	-27.0 .. 150.0	1.0 .. 178.0	1.0
°F	-16.0 .. 302.0	2.0 .. 320.0	2.0

Window function

Unit	Lower switch value	Upper switch value	Increment*
°C	-28.0 .. 149.0	-27.0 .. 150.0	1.0
°F	-18.0 .. 300.0	-16.0 .. 302.0	2.0

* All ranges given in the table can be adjusted by the increments shown.

Additional functions:

- Switching mode of the switching outputs adjustable (switch point function or window function)
- Switching direction of the switching outputs adjustable (N/C or N/O function)
- Switch-on and switch-off delay adjustable from 0 .. 750 seconds
- Choice of display (actual temperature, peak temperature, switch point 1, switch point 2, display off)

Pin connections:

M12x1, 4 pole

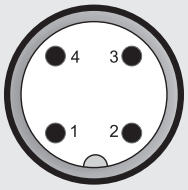

Pin	ETS 386-2	ETS 386-3
1	$+U_B$	$+U_B$
2	SP2	Analogue
3	0 V	0 V
4	SP1	SP1

M12x1, 5 pole

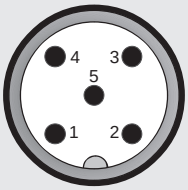

Pin	ETS 388-5
1	$+U_B$
2	Analogue
3	0 V
4	SP1
5	SP2

Dimensions:

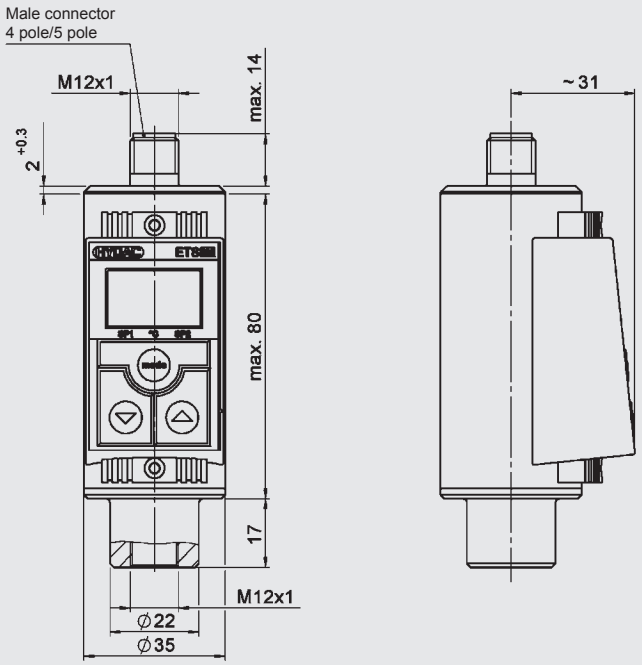

Model code:

ETS 3 8 X – X – 150 – X00

Mechanical connection
8 = electrical connection for separate temperature probe

Electrical connection
6 = male M12x1, 4 pole
only possible on output models “2” and “3”
8 = male M12x1, 5 pole
only possible on output model “5”

Output
2 = 2 switching outputs
only in conjunction with electrical connection type “6”
3 = 1 switching output and 1 analogue output
only in conjunction with electrical connection type “6”
5 = 2 switching outputs and 1 analogue output
only in conjunction with electrical connection type “8”

Measuring range
-30 .. +150 °C (-22 .. +302 °F)

Modification number
000 = display in °C
400 = display in °F

Accessories (supplied with instrument):
A male cable connector M12x1, 4 pole, to connect the separate temperature probe and a 3 m sensor cable, LIYY 4 x 0.5 mm².

Accessories available (not supplied with instrument)

Separate temperature probe:
- TFP 104 - 000 with male 4 pole, Binder series 714 M18 (including mating connector) — Part no. 904696
- TFP 106 - 000 With male 4 pole M12x1 (mating connector not included) — Part no.: 921330
- Tank installation sleeve for TFP 100 — Part no.: 906170

Further information on accessories as well as further accessories, such as mating connectors and clamps for wall-mounting etc., can be found in the Accessories brochure.

Note:

The information in this brochure relates to the operating conditions and applications described.

For applications or operating conditions not described, please contact the relevant technical department.

Subject to technical modifications.

HYDAC ELECTRONIC GMBH
Hauptstraße 27, 66128 Saarbrücken
Germany
Telephone +49 (0)6897 509-01
Fax +49 (0)6897 509-1726
E-mail: electronic@hydac.com
Internet: www.hydac.com

Temperature Switch ETS 3200

Integrated temperature probe | **Display**

Up to 2 switching outputs
Analogue output

Description:

The ETS 3200 is a compact electronic temperature switch with a 4-digit display.

With its integrated temperature probe, the ETS 3200 is particularly suitable for direct tank installation and is available in various lengths.

Pressure-resistant up to 600 bar with an integrated 18 mm temperature probe, this model can be mounted directly inline or on the hydraulic block.

Different output models with one or two switching outputs, optionally with an additional analogue output signal, offer a variety of application possibilities.

The switch points and the associated hystereses can be adjusted very quickly and easily using the key pad.

For optimum adaptation to the particular application, the instrument has many additional adjustment parameters (e.g. switching delay times, N/C / N/O function).

The ETS 3200 is also available in a variant with menu navigation in accordance with VDMA.

Technical data:

Input data					
Measuring range		-25 .. +100 °C (-13 .. +212 °F)			
Probe length	mm	18	100	250	350
Probe diameter	mm	6	8	8	8
Pressure resistance	bar	600	50 [1]	50 [1]	50 [1]
Mechanical connection		G1/2 A ISO 1179-2			
Tightening torque, recommended		45 Nm			
Parts in contact with fluid		Mech. connection: Stainless steel Seal: FKM			
Output data					
Switching outputs		1 or 2 PNP transistor outputs Switching current: max. 1.2 A per output Switching cycles: > 100 million			
Analogue output, permitted load resistance		Selectable: 4 .. 20 mA load resist. max. 500 Ω 0 .. 10 V load resist. min. 1 kΩ			
Accuracy (at room temperature)		≤ ± 1.0 °C (≤ ± 2.0 °F)			
Temperature drift (environment)		≤ ± 0.015 % FS / °C			
Response time acc. to DIN EN 60751	t_{50}: t_{90}:	3 s 9 s	8 s 15 s	8 s 15 s	8 s 15 s
Repeatability		≤ ± 0.25 % FS max.			
Environmental conditions					
Operating temperature range		-25 .. +80 °C (-13 .. +176 °F) (-25 .. +60 °C [-13 .. +140 °F] for UL-Spec.)			
Storage temperature range		-40 .. +80 °C (-40 .. +176 °F)			
Fluid temperature range [2]		-40 .. +100 °C / -25 .. +100 °C (-40 .. +212 °F / -13 .. +212 °F)			
CE mark		EN 61000-6-1 / -2 / -3 / -4			
cULus mark [3]		Certificate-No.: E318391			
Vibration resistance acc. to DIN EN 60068-2-6 at 0 .. 500 Hz		≤ 10 g			
Shock resistance acc. to DIN EN 60068-2-27 (11 ms)		≤ 50 g			
Protection class acc. to DIN EN 60529 [4]		IP 67			
Other data					
Supply voltage when applied acc. to UL specifications		9 .. 35 V DC, without analogue output 18 .. 35 V DC, with analogue output - limited energy – acc. to 9.3 UL 61010; Class 2; UL 1310 / 1585; LPS UL 60950			
Residual ripple of supply voltage		≤ 5 %			
Current consumption		≤ 2.455 A total ≤ 35 mA with inactive switching outputs ≤ 55 mA with inactive switching output and analogue output			
Display		4-digit, LED, 7-segment, red, height of digits 7 mm			
Weight	g	~ 135	~ 150	~ 185	~ 210

Note: Reverse polarity protection of the supply voltage, overvoltage, override and short circuit protection are provided.
FS (**F**ull **S**cale) = relative to complete measuring range

[1] Higher pressure resistance on request
[2] -25 °C with FKM seal, -40 °C on request
[3] Environmental conditions acc. to 1.4.2 UL 61010-1; C22.2 No. 61010-1
[4] With mounted mating connector in corresponding protection class

Setting options: Standard design

All the settings available on the ETS 3200 are combined in two easy-to-navigate menus. In order to prevent unauthorised adjustment of the device, a programming lock can be set.

Setting ranges for the switching outputs:

Switch point function

Unit	Switch point	Hysteresis	Incre-ment*
°C	-23.0 .. 100.0	1.0 .. 123.5	0.5
°F	-10 .. 212	2 .. 222	1

Window function

Unit	Lower switch value	Upper switch value	Incre-ment*
°C	-23.0 .. 97.5	-22.0 .. 98.5	0.5
°F	-10 .. 208	-7 .. 209	1

* All ranges given in the table can be adjusted by the increments shown.

Setting options: menu navigation acc. to VDMA

All terms and symbols used for setting the ETS 3200 as well as the menu structure comply with the specifications in the VDMA Standard (VDMA 24574-2) for temperature switches.

The ETS 3200 can easily be adjusted via three push-buttons.

Setting ranges for the switching outputs:

Measuring range	Lower limit of RP / FL	Upper limit of SP / FH
-25 .. +100 °C	-23.5 °C	100.0 °C
-13 .. +212 °F	-11 °F	212 °F

Measuring range	Min. difference betw. RP and SP & FL and FH	Increment*
-25 .. +100 °C	1.5 °C	0.5 °C
-13 .. + 212 °F	2 °F	1 °F

* All ranges given in the table can be adjusted by the increments shown.

SP = switch point
RP = switch-back point
FL = temperature window lower value
FH = temperature window upper value

Additional functions:

- Switching mode of the switching outputs adjustable (switch point function or window function)
- Switching direction of the switching outputs adjustable (N/C or N/O function)
- Switch-on and switch-off delay adjustable from 0.00 .. 99.99 seconds
- Analogue output signal selectable 4 .. 20 mA or 0 .. 10 V
- Display of the actual temperature in °C or °F.
- Choice of display (actual temperature, peak temperature, switch point 1, switch point 2; additional, in standard version, display off)

Pin connections:

M12x1, 4 pole

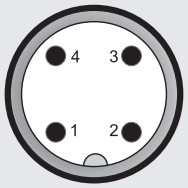

Pin	ETS 3226-2	ETS 3226-3
1	$+U_B$	$+U_B$
2	SP2	Analogue
3	0 V	0 V
4	SP1	SP1

M12x1, 5 pole

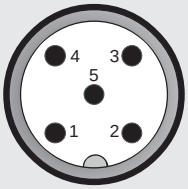

Pin	ETS 3228-5
1	$+U_B$
2	Analogue
3	0 V
4	SP1
5	SP2

Dimensions:

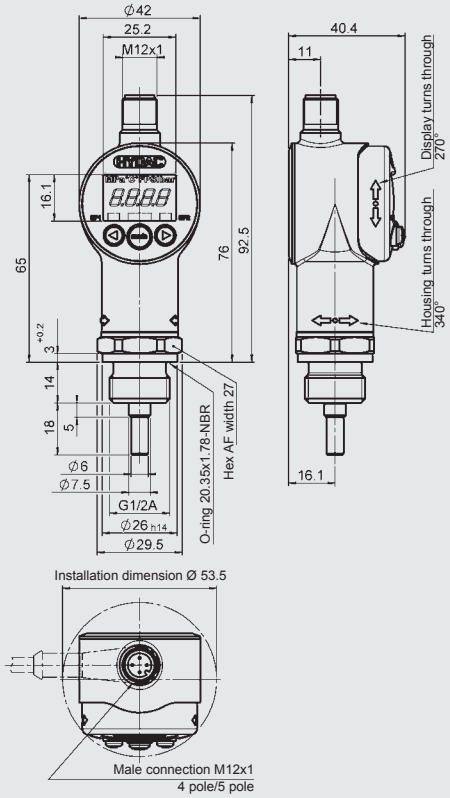

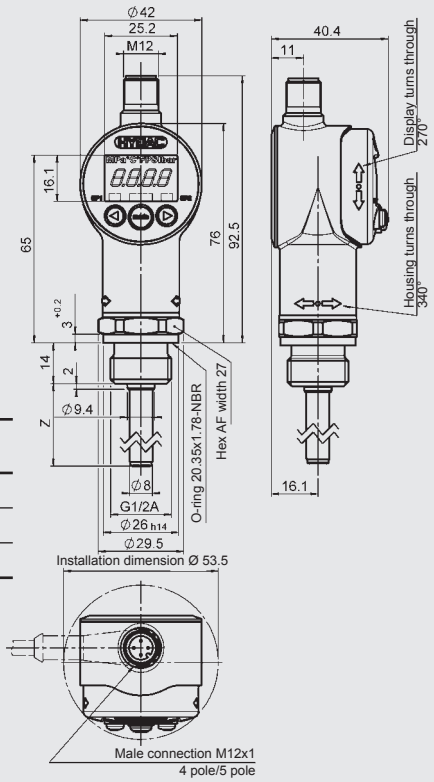

Probe length (dim. Z)
100
250
350

Model code:

ETS 3 2 2 X – X – XXX – X00

Type
2 = with integrated temperature probe

Mechanical connection
2 = G1/2 A ISO 1179-2

Electrical connection
6 = male M12x1, 4 pole
only possible on output models "2" and "3"
(mating connector not supplied)
8 = male M12x1, 5 pole
only possible on output model "5" and modification "000"
(mating connector not supplied)

Output
2 = 2 switching outputs
only in conjunction with electrical connection type "6"
3 = 1 switching output and 1 analogue output
only in conjunction with electrical connection type "6"
5 = 2 switching outputs and 1 analogue output
only in conjunction with electrical connection code type "8"
and modification "000"

Probe length in mm
018; 100; 250; 350

Modification number
000 = standard
V00 = menu navigation acc. to VDMA (standard sheet 24574)

Accessories:
Appropriate accessories, such as mating connectors, protective sleeves for tank installation and splash guards, can be found in the Accessories brochure.

Note:

The information in this brochure relates to the operating conditions and applications described.

For applications or operating conditions not described, please contact the relevant technical department.

Subject to technical modifications.

HYDAC ELECTRONIC GMBH
Hauptstr. 27, 66128 Saarbrücken
Germany
Telephone +49 (0)6897 509-01
Fax +49 (0)6897 509-1726
e-mail: electronic@hydac.com
Internet: www.hydac.com

Temperature Switch ETS 3800

Separate temperature probe	Display

Up to 2 switching outputs
Analogue output

Description:

The ETS 3800 is a compact electronic temperature switch with a 4-digit display.

The version for a separate temperature probe has a measuring range of -30 .. +150 °C and is used primarily with the TFP 100 temperature probe which was specially developed for tank installation. It is also possible, however, to evaluate commonly available PT 100 temperature probes. Different output models with one or two switching outputs, optionally with an additional analogue output signal, offer a variety of application possibilities.

The switch points and the associated hystereses can be adjusted very quickly and easily using the key pad.

For optimum adaptation to the particular application, the instrument has many additional adjustment parameters (e.g. switching delay times, N/C / N/O function etc.).

The ETS 3800 is also available in a variant with menu navigation in accordance with VDMA.

Technical data:

Input data	
Measuring element	PT 100 (TFP 100)
Connection, separate temperature probe	Female cable connector M12x1, 4 pole
Measuring range [1]	-30 .. +150 °C (-22 .. +302 °F)
Output data	
Switching outputs	1 or 2 PNP transistor outputs Switching current: max. 1.2 A per switching output Switching cycles: > 100 million
Analogue output, permitted load resistance	Selectable: 4 .. 20 mA load resist. max. 500 Ω 0 .. 10 V load resist. min. 1 kΩ corresp. in each case to -30 .. +150 °C
Accuracy (at room temperature)	≤ ± 1.0 °C (≤ ± 2.0 °F) (+error separate temperature probe)
Temperature drift (environment)	≤ ± 0.015 % FS / °C
Repeatability	≤ ± 0.25 % FS max.
Environmental conditions	
Operating temperature range	-25 .. +80 °C (-13 .. +176 °F) (-25 .. +60 °C [-13 .. +140 °F] for UL-Spec.)
Storage temperature range	-40 .. +80 °C (-40 .. +176 °F)
CE mark	EN 61000-6-1 / -2 / -3 / -4
cULus mark [2]	Certificate-No.: E318391
Vibration resistance acc. to DIN EN 60068-2-6 at 0 .. 500 Hz	≤ 10 g
Shock resistance acc. to DIN EN 60068-2-27 (11 ms)	≤ 50 g
Protection class acc. to DIN EN 60529 [3]	IP 67
Other data	
Supply voltage when applied acc. to UL specifications	9 .. 35 V DC, without analogue output 18 .. 35 V DC, with analogue output - limited energy – acc. to 9.3 UL 61010; Class 2; UL 1310 / 1585; LPS UL 60950
Residual ripple of supply voltage	≤ 5 %
Current consumption	≤ 2.455 A total ≤ 35 mA with inactive switching outputs ≤ 55 mA with inactive switching output and analogue output
Display	4-digit, LED, 7-segment, red, height of digits 7 mm
Weight	~ 87 g (excluding cable connector and probe)

Note: Reverse polarity protection of the supply voltage, overvoltage, override and short circuit protection are provided.
FS (**F**ull **S**cale) = relative to complete measuring range

[1] Depending on the fluid temperature range of the connected temperature sensor, the measurement range of the ETS 3000 may be reduced.
[2] Environmental conditions acc. to 1.4.2 UL 61010-1; C22.2 No. 61010-1
[3] With mounted mating connector in corresponding protection class

Setting options: Standard design

All the settings available on the ETS 3800 are combined in two easy-to-navigate menus. In order to prevent unauthorised adjustment of the device, a programming lock can be set.

Setting ranges for the switching outputs:

Switch point function

Unit	Switch point	Hysteresis	Incre-ment*
°C	-27.0 .. 150.0	1.0 .. 178.0	0.5
°F	-17 .. 302	2 .. 320	1

Window function

Unit	Lower switch value	Upper switch value	Incre-ment*
°C	-27.0 .. 146.5	-25.5 .. 148.0	0.5
°F	-17 .. 296	-14 .. 298	1

* All ranges given in the table can be adjusted by the increments shown.

Setting options: menu navigation acc. to VDMA

All terms and symbols used for setting the ETS 3800 as well as the menu structure comply with the specifications in the VDMA Standard (VDMA 24574-2) for temperature switches.

The ETS 3800 can easily be adjusted via three push-buttons.

Setting ranges for the switching outputs:

Measuring range	Lower limit of RP / FL	Upper limit of SP / FH
-30 .. +150 °C	-28.0 °C	150.0 °C
-22 .. +302 °F	-19 °F	302 °F

Measuring range	Min. difference betw. RP and SP & FL and FH	Increment*
-30 .. +150 °C	2.0 °C	0.5 °C
-22 .. +302 °F	3 °F	1 °F

* All ranges given in the table can be adjusted by the increments shown.

SP = switch point
RP = switch-back point
FL = temperature window lower value
FH = temperature window upper value

Additional functions:

- Switching mode of the switching outputs adjustable (switch point function or window function)
- Switching direction of the switching outputs adjustable (N/C or N/O function)
- Switch-on and switch-off delay adjustable from 0.00 .. 99.99 seconds
- Analogue output signal selectable 4 .. 20 mA or 0 .. 10 V
- Display of the actual temperature in °C or °F.
- Choice of display (actual temperature, peak temperature, switch point 1, switch point 2; additional, in standard version, display off)

Pin connections:

M12x1, 4 pole

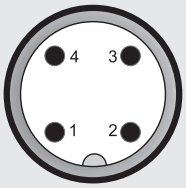

Pin	ETS 3866-2	ETS 3866-3
1	$+U_B$	$+U_B$
2	SP2	Analogue
3	0 V	0 V
4	SP1	SP1

M12x1, 5 pole

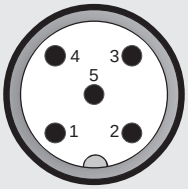

Pin	ETS 3868-5
1	$+U_B$
2	Analogue
3	0 V
4	SP1
5	SP2

Dimensions:

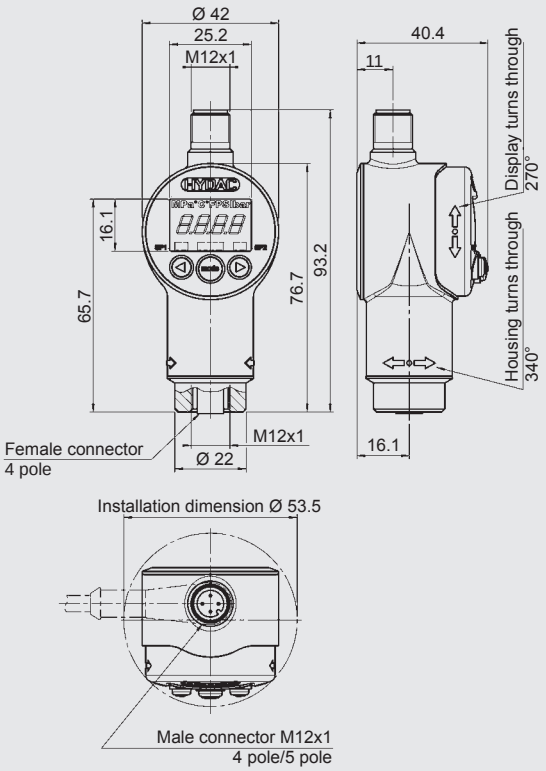

Model code:

ETS 3 8 6 X – X – 000 – X00

Type
8 = for separate temperature probe

Mechanical connection
6 = female cable connector M12x1, 4 pole

Electrical connection
6 = male M12x1, 4 pole
only possible on output models “2” and “3”
(mating connector not supplied)
8 = male M12x1, 5 pole
only possible on output model “5” and modification “000”
(mating connector not supplied)

Output
2 = 2 switching outputs
only in conjunction with electrical connection type "6"
3 = 1 switching output and 1 analogue output
only in conjunction with electrical connection type "6"
5 = 2 switching outputs and 1 analogue output
only in conjunction with electrical connection code type “8”
and modification “000”

Probe length in mm
000 = separate temperature probe

Modification number
000 = standard
V00 = menu navigation acc. to VDMA (standard sheet 24574)

Accessories (supplied with instrument**):**
A male cable connector M12x1, 4 pole, to connect the separate temperature probe and a 3 m sensor cable, LIYCY 4 x 0.25 mm².

Accessories available (not supplied with instrument):
Separate temperature probe:

- TFP 106 - 000 with male 4 pole M12x1 (mating connector not included) Part no.: 921330
- Tank installation sleeve for TFP 100 Part no.: 906170

Further information on accessories as well as further accessories, such as mating connectors, splash guards and clamps for wall-mounting etc., can be found in the Accessories brochure.

Note:

The information in this brochure relates to the operating conditions and applications described.

For applications or operating conditions not described, please contact the relevant technical department.

Subject to technical modifications.

HYDAC ELECTRONIC GMBH
Hauptstr. 27, 66128 Saarbrücken
Germany
Telephone +49 (0)6897 509-01
Fax +49 (0)6897 509-1726
e-mail: electronic@hydac.com
Internet: www.hydac.com

Temperature Switch
HTS 8000 for series applications

Integrated temperature probe

Customised designs thanks to diverse electrical and mechanical connections
Up to 2 switching outputs

Description:

The temperature transmitter series HTS 8000 has been specifically developed for the OEM market, e.g. in mobile applications. It is based on a silicon semiconductor device with corresponding evaluation electronics.

All parts in contact with fluid are in stainless steel, and are welded together.

The transistor output is available with either an N/C or an N/O function. The switch and switch-back point of the HTS 8000 is factory-set acc. to customer specification.

For the electrical connection, various built-in connection plugs are available.

The pressure resistance up to 600 bar and excellent EMC characteristics make the HTS 8000 ideal for use in harsh conditions.

Technical data:

Input data			
Measuring range [1]	-25 .. +125 °C (-13 .. +257 °F)		
Probe length	mm	16	40
Probe diameter	mm	6.7	6.7
Pressure resistance	bar	600	600
Mechanical connection [2]	G1/4 A ISO 1179-2		
Tightening torque, recommended	20 Nm		
Parts in contact with fluid	Mech. connection: Stainless steel Seal: FKM		
Output data			
Switching output	- 1 PNP transistor output - 2 PNP transistor outputs (only in conjunction with electr. conn. M12x1, 4 pole) Switching current: ≤ 500 mA per output Switching cycles: > 100 million Switch points / switch-back points: acc. to customer specification Switch-on and switch-off delay: 32 ms standard (8 .. 2000 ms factory-set acc. to customer spec.)		
Accuracy (at room temperature)	≤ ± 1.5 °C (≤ ± 2.7 °F)		
Temperature drift (environment)	≤ ± 0.02 % FS / °C		
Response time acc. to DIN EN 60751	t_{50} = t_{90} =	4 s 8 s	4 s 8 s
Repeatability	≤ ± 1 % FS max.		
Environmental conditions			
Operating temperature range [3]	-40 .. +85 °C / -25 .. +85 °C (-40 .. +185 °F/ -13 .. +185 °F)		
Storage temperature range	-40 .. +100 °C (-40 .. +212 °F)		
CE mark	EN 61000-6-1 / 2 / 3 / 4		
cULus mark [4]	Certificate no. E318391		
Vibration resistance acc. to DIN EN 60068-2-6 at 10 .. 500 Hz	≤ 25 g		
Shock resistance acc. to DIN EN 60068-2-27	100 g / 6 ms / half-sine 500 g / 1 ms / half-sine		
Protection class acc. to DIN EN 60529 [5]	IP 67		
Other data			
Electrical connection	Various male connectors, e.g.: M12x1, Packard Metri Pack, Deutsch DT 04, AMP Superseal, AMP Junior Power Timer, jacketed cable		
Supply voltage when applied acc. to UL specifications	8 .. 32 V DC - limited energy - acc. to 9.3 UL 61010; Class 2; UL 1310/1585; LPS UL 60950		
Residual ripple of supply voltage	≤ 5 %		
Current consumption	≤ 20 mA with inactive switching outputs ≤ 0.52 A with 1 switching output ≤ 1.02 A with 2 switching outputs		
Weight	~ 145 g		

Note: Reverse polarity protection of the supply voltage, overvoltage, override and short circuit protection are provided.
FS (**F**ull **S**cale) = relative to complete measuring range

[1] Other measuring ranges on request
[2] Other mechanical connections on request
[3] -25 °C with FKM seal, -40 °C on request
[4] Environmental conditions acc. to 1.4.2 UL 61010-1; C22.2 No 61010-1
[5] With mounted mating connector in corresponding protection class

Dimensions:

Male connector
DIN 72585-3 pole

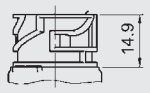

Male connector
Metri-Pack
series 150 3 pole

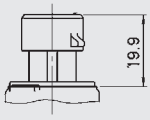

Male connection
DT04 3 pole

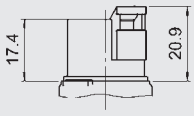

Male connector
Junior Power Timer
3 pole

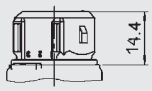

Male connector
Superseal series 1.5
3 pole

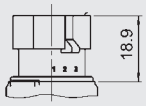

Jacketed cable

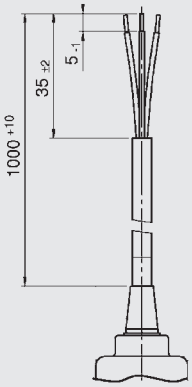

Male connector
EN175301-803
3 pole + PE

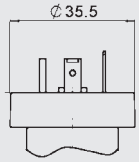

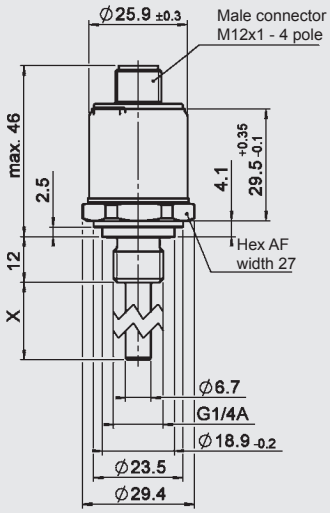

Order details:

The electronic temperature switch HTS 8000 has been specially developed for OEM customers and is available for minimum order quantities of 500 units per type.

For precise specifications, please contact the Sales Department of HYDAC ELECTRONIC.

Note:

The information in this brochure relates to the operating conditions and applications described.

For applications or operating conditions not described, please contact the relevant technical department.

Subject to technical modifications.

HYDAC ELECTRONIC GMBH
Hauptstr. 27, 66128 Saarbrücken
Germany
Telephone +49 (0)6897 509-01
Fax +49 (0)6897 509-1726
e-mail: electronic@hydac.com
Internet: www.hydac.com

Temperature Switch ETS 3200

Integrated temperature probe | **Display**

IO-Link

Description:

The ETS 3200 with IO-Link communication interface is a compact, electronic temperature switch with an integrated 4-digit display.

With its integrated temperature probe, the ETS 3200 is particularly suitable for direct tank installation and is available in various lengths.

Pressure-resistant up to 600 bar with an integrated 18 mm temperature probe, this model can be mounted directly inline or on the hydraulic block.

The instrument has a switching output and an additional output that can be configured as switching or analogue output (4 .. 20 mA or 0 .. 10 V).

IO-Link is the communication between the sensor/actuator (IO-Link device) and an IO-Link master based on a point-to-point interface.

The advantages:
Process data, parameters and diagnostic information of the temperature switch can be transmitted via a standard cable (SDCI mode). The integrated LED display provides information on the operating mode and the switching statuses.

Simple exchange, the IO-Link master saves the parameters of the connected temperature switch and transmits them to the newly connected temperature switch when replaced. Thus, time-consuming new parameterisations will no longer be required.

If IO-Link is not used, the sensor still functions as a temperature switch with two switching outputs (SIO mode). To create customer-specific small series or to duplicate sensor settings across the system, the sensor can also be easily adjusted outside the system to suit the particular application, with the HYDAC Programming Device HPG P1-000, the HYDAC Programming Adapter ZBE P1-000 or by means of the Portable Data Recorder HMG 4000.

Typical fields of application for ETS 3200 IO-Link are machine tools, handling and assembly automation, intralogistics or the packaging industry.

Technical data:

Input data					
Measuring range		-25 .. +100 °C (-13 .. +212 °F)			
Probe length	mm	18	100	250	350
Probe diameter	mm	6	8	8	8
Pressure resistance	bar	600	50 [1]	50 [1]	50 [1]
Mechanical connection		G1/2 A ISO 1179-2			
Tightening torque, recommended		45 Nm			
Parts in contact with fluid		Mech. connection: Stainless steel Seal: FKM			
Output data					
Switching outputs		PNP transistor outputs Switching current: max. 250 mA per switching output			
Analogue output, permitted load resistance		Selectable: 4 .. 20 mA load resist. max. 500 Ω 0 .. 10 V load resist. min. 1 kΩ			
Accuracy (at room temperature)		≤ ± 1.0 °C (≤ ± 2.0 °F)			
Temperature drift (environment)		≤ ± 0.015 % FS / °C			
Response time acc. to DIN EN 60751	t_{50}: t_{90}:	3 s 9 s	8 s 15 s	8 s 15 s	8 s 15 s
Repeatability		≤ ± 0.25 % FS max.			
Environmental conditions					
Operating temperature range		-25 .. +80 °C (-13 .. +176 °F) (-25 .. +60 °C [-13 .. +140 °F] for UL-Spec.)			
Storage temperature range		-40 .. +80 °C (-40 .. +176 °F)			
Fluid temperature range [2]		-40 .. +100 °C / -25 .. +100 °C (-40 .. +212 °F / -13 .. +212 °F)			
CE mark		EN 61000-6-1 / -2 / -3 / -4			
cULus mark [3]		Certificate-No.: E318391			
Vibration resistance acc. to DIN EN 60068-2-6 at 0 .. 500 Hz		≤ 10 g			
Shock resistance acc. to DIN EN 60068-2-27 (11 ms)		≤ 50 g			
Protection class acc. to DIN EN 60529 [4]		IP 67			
IO-Link specific data					
IO-Link revision		V1.1 / support V1.0			
Transmission rate, baud rate [5]		38.4 kBaud (COM2)			
Minimum cycle time		2.5 ms			
Process data width		16 bit			
SIO mode supported		Yes			
M-sequence capability		PREOPERATE: TYPE_0 OPERATE: TYPE_2_2 ISDU: Supported			
IO Device Description (IODD) download at: https://ioddfinder.io-link.com/#/					
Other data					
Supply voltage when applied acc. to UL specifications		9 .. 35 V DC, if PIN 2 = SP2 18 .. 35 V DC, if PIN 2 = analogue output - limited energy – acc. to 9.3 UL 61010; Class 2; UL 1310 / 1585; LPS UL 60950			
Residual ripple of supply voltage		≤ 5 %			
Current consumption		≤ 0.535 A with active switching outputs ≤ 35 mA with inactive switching outputs ≤ 55 mA with inactive switching output and analogue output			
Display		4-digit, LED, 7-segment, red, height of digits 7 mm			
Weight	g	~ 135	~ 150	~ 185	~ 210

Note: Reverse polarity protection of the supply voltage, overvoltage, override and short circuit protection are provided.
FS (**F**ull **S**cale) = relative to complete measuring range

[1] Higher pressure resistance on request
[2] -25 °C with FKM seal, -40 °C on request
[3] Environmental conditions acc. to 1.4.2 UL 61010-1; C22.2 No. 61010-1
[4] With mounted mating connector in corresponding protection class
[5] Connection with unshielded standard sensor line possible up to a maximum line length of 20 m.

Setting options:

All terms and symbols used for setting the ETS 3200 as well as the menu structure comply with the specifications in the VDMA Standard for temperature switches.

Setting ranges for the switching outputs:

Measuring range	Lower limit of RP / FL	Upper limit of SP / FH
-25 .. +100 °C	-23.5 °C	100.0 °C
-13 .. +212 °F	-11 °F	212 °F

Measuring range	Min. difference betw. RP and SP & FL and FH	Increment*
-25 .. +100 °C	1.5 °C	0.5 °C
-13 .. +212 °F	2 °F	1 °F

* All ranges given in the table can be adjusted by the increments shown.

SP = switch point
RP = switch-back point
FL = temperature window lower value
FH = temperature window upper value

Additional functions:

- Switching mode of the switching outputs adjustable (switch point function or window function)
- Switching direction or switching outputs adjustable (N/C or N/O function)
- Switch-on or switch-off delay adjustable from 0.00 .. 99.99 seconds
- Analogue output signal selectable 4 .. 20 mA or 0 .. 10 V
- Choice of display (actual temperature, peak temperature, switch point 1, switch point 2, display off)

Pin connections:

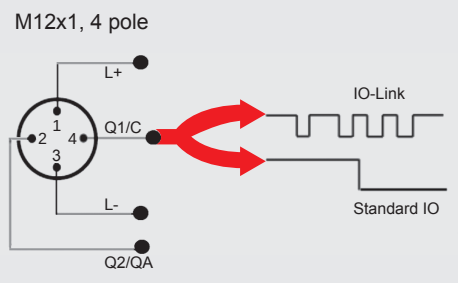

Pin	Signal	Description
1	L+	$+U_B$
2	Q2/QA	Switching output (SP2) / analogue output
3	L-	0 V
4	Q1/C	IO-Link communication / switching output (SP1)

Dimensions:

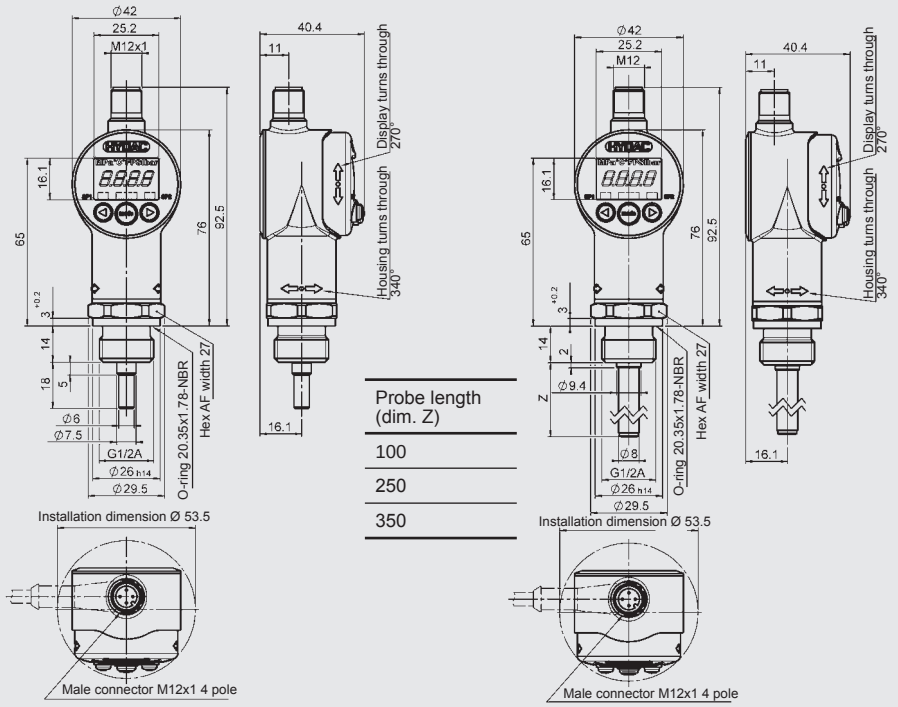

Probe length (dim. Z)
100
250
350

Model code:

ETS 3 2 2 6 – F31 – XXX – 000

Type
2 = with integrated temperature probe

Mechanical connection
2 = G1/2 A ISO 1179-2

Electrical connection
6 = male M12x1, 4 pole
(mating connector not supplied)

Output
F31 = IO-Link interface

Probe length in mm
018; 100; 250; 350

Modification number
000 = standard

Accessories:
Appropriate accessories, such as mating connectors, mechanical adapters, splash guards, clamps for wall-mounting and programming units, can be found in the Accessories brochure.

Note:

The information in this brochure relates to the operating conditions and applications described.

For applications or operating conditions not described, please contact the relevant technical department.

Subject to technical modifications.

HYDAC ELECTRONIC GMBH
Hauptstraße 27, 66128 Saarbrücken
Germany
Telephone +49 (0)6897 509-01
Fax +49 (0)6897 509-1726
E-mail: electronic@hydac.com
Internet: www.hydac.com

Temperature Switches ETS 3800

Separate temperature probe | Display

IO-Link

Description:

The ETS 3800 with IO-Link communication interface is a compact, electronic temperature switch with an integrated 4-digit display. The version for a separate temperature probe has a measuring range of -30 .. +150 °C and is used primarily with the TFP 100 temperature probe which was specially developed for tank installation.

It is also possible, however, to evaluate commonly available PT 100 temperature probes.

The instrument has a switching output and additional output that can be configured as switching or analogue output (4 .. 20 mA or 0 .. 10 V).

IO-Link is the communication between the sensor/actuator (IO-Link device) and an IO-Link master based on a point-to-point interface.

The advantages:
Process data, parameters and diagnostic information of the temperature switch can be transmitted via a standard cable (SDCI mode). The integrated LED display provides information on the operating mode and the switching statuses.

Simple exchange, the IO-Link master saves the parameters of the connected temperature switch and transmits them to the newly connected temperature switch when replaced. Thus, time-consuming new parameterisations will no longer be required.

If IO-Link is not used, the sensor still functions as a temperature switch with two switching outputs (SIO mode). To create customer-specific small series or to duplicate sensor settings across the system, the sensor can also be easily adjusted outside the system to suit the particular application, with the HYDAC Programming Device HPG P1-000, the HYDAC Programming Adapter ZBE P1-000 or by means of the Portable Data Recorder HMG 4000.

Typical fields of application for ETS 3800 IO-Link are machine tools, handling and assembly automation, intralogistics or the packaging industry.

Technical data:

Input data	
Measuring element	PT 100 (TFP 100)
Connection, separate temperature probe	Female cable connector M12x1, 4 pole
Measuring range [1]	-30 .. +150 °C (-22 .. +302 °F)
Output data	
Switching outputs	PNP transistor outputs Switching current: max. 250 mA per switching output
Analogue output, permitted load resistance	Selectable: 4 .. 20 mA load resist. max. 500 Ω 0 .. 10 V load resist. min. 1 kΩ corresp. in each case to -30 .. +150 °C
Accuracy (at room temperature)	≤ ± 1.0 °C (≤ ± 2.0 °F) (+error separate temperature probe)
Temperature drift (environment)	≤ ± 0.015 % FS / °C
Repeatability	≤ ± 0.25 % FS max.
Environmental conditions	
Operating temperature range	-25 .. +80 °C (-13 .. +176 °F) (-25 .. +60 °C [-13 .. +140 °F] for UL-Spec.)
Storage temperature range	-40 .. +80 °C (-40 .. +176 °F)
CE mark	EN 61000-6-1 / -2 / -3 / -4
cULus mark [2]	Certificate-No.: E318391
Vibration resistance acc. to DIN EN 60068-2-6 at 0 .. 500 Hz	≤ 10 g
Shock resistance acc. to DIN EN 60068-2-27 (11 ms)	≤ 50 g
Protection class acc. to DIN EN 60529 [3]	IP 67
IO-Link specific data	
IO-Link revision	V1.1 / support V1.0
Transmission rate, baud rate [4]	38.4 kBaud (COM2)
Minimum cycle time	2.5 ms
Process data width	16 bit
SIO mode supported	Yes
M-sequence capability	PREOPERATE: TYPE_0 OPERATE: TYPE_2_2 ISDU: Supported
IO Device Description (IODD) download at: https://ioddfinder.io-link.com/#/	
Other data	
Supply voltage	9 .. 35 V DC, if PIN 2 = SP2 18 .. 35 V DC, if PIN 2 = analogue output
when applied acc. to UL specifications	- limited energy – acc. to 9.3 UL 61010; Class 2; UL 1310 / 1585; LPS UL 60950
Residual ripple of supply voltage	≤ 5 %
Current consumption	≤ 0.535 A with active switching outputs ≤ 35 mA with inactive switching outputs ≤ 55 mA with inactive switching output and analogue output
Display	4-digit, LED, 7-segment, red, height of digits 7 mm
Weight	~ 87 g (excluding cable connector and probe)

Note: Reverse polarity protection of the supply voltage, overvoltage, override and short circuit protection are provided.
FS (**F**ull **S**cale) = relative to complete measuring range

[1] Depending on the fluid temperature range of the connected temperature sensor, the measurement range of the ETS 3000 may be reduced.
[2] Environmental conditions acc. to 1.4.2 UL 61010-1; C22.2 No. 61010-1
[3] With mounted mating connector in corresponding protection class
[4] Connection with unshielded standard sensor line possible up to a maximum line length of 20 m.

Setting options:

All terms and symbols used for setting the ETS 3800 as well as the menu structure comply with the specifications in the VDMA Standard for temperature switches.

Setting ranges for the switching outputs:

Measuring range	Lower limit of RP / FL	Upper limit of SP / FH
-30 .. +150 °C	-28.0 °C	150.0 °C
-22 .. +302 °F	-19 °F	302 °F

Measuring range	Min. difference betw. RP and SP & FL and FH	Increment*
-30 .. +150 °C	2.0 °C	0.5 °C
-22 .. +302 °F	3 °F	1 °F

* All ranges given in the table can be adjusted by the increments shown.

SP = switch point
RP = switch-back point
FL = temperature window lower value
FH = temperature window upper value

Additional functions:

- Switching mode of the switching outputs adjustable (switch point function or window function)
- Switching direction or switching outputs adjustable (N/C or N/O function)
- Switch-on or switch-off delay adjustable from 0.00 .. 99.99 seconds
- Analogue output signal selectable 4 .. 20 mA or 0 .. 10 V
- Choice of display (actual temperature, peak temperature, switch point 1, switch point 2, display off)

Pin connections:

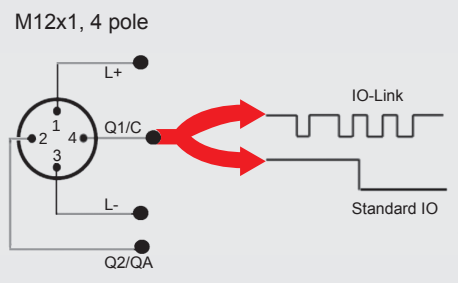

Pin	Signal	Description
1	L+	$+U_B$
2	Q2/QA	Switching output (SP2) / analogue output
3	L-	0 V
4	Q1/C	IO-Link communication / switching output (SP1)

Dimensions:

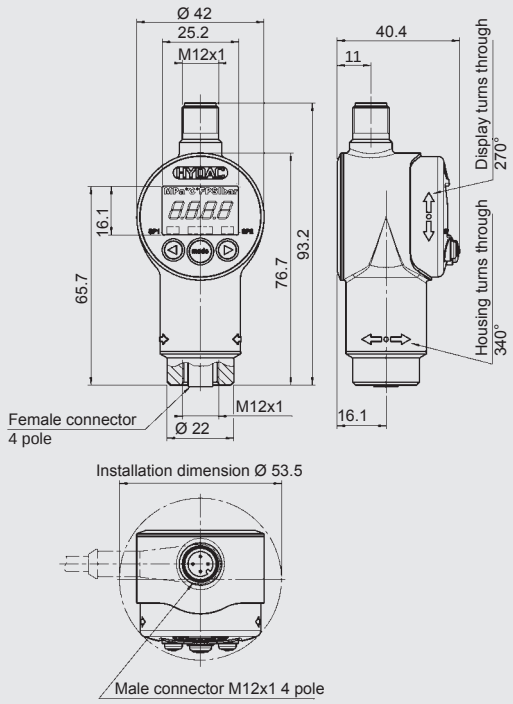

Model code:

ETS 3 8 6 6 – F31 – 000 – 000

Type
8 = for separate temperature probes

Mechanical connection
6 = female cable connector M12x1, 4 pole

Electrical connection
6 = male M12x1, 4 pole
(mating connector not supplied)

Output
F31 = IO-Link interface

Probe length in mm
000 = separate temperature probe

Modification number
000 = standard

Accessories (supplied with instrument**):**
A male cable connector M12x1, 4 pole, to connect the separate temperature probe and a 3 m sensor cable, LIYCY 4 x 0.25 mm².

Accessories available (not supplied with instrument):
Separate temperature probe:

- TFP 106 - 000 with male 4 pole M12x1 (mating connector not included) — Part no.: 921330
- Tank installation sleeve for TFP 100 — Part no.: 906170

Further information on accessories as well as further accessories, such as mating connectors, splash guards, clamps for wall-mounting and programming units, can be found in the Accessories brochure.

Note:

The information in this brochure relates to the operating conditions and applications described.

For applications or operating conditions not described, please contact the relevant technical department.

Subject to technical modifications.

HYDAC ELECTRONIC GMBH
Hauptstraße 27, 66128 Saarbrücken
Germany
Telephone +49 (0)6897 509-01
Fax +49 (0)6897 509-1726
E-mail: electronic@hydac.com
Internet: www.hydac.com

Temperature Probe TFP 100

Description:

The TFP 100 temperature probe was developed primarily for tank installation. The PT 100 precision resistor in 4-conductor design can be connected directly to HYDAC temperature switches ETS 3800, ETS 380 and ETS 1700.

The standardised electrical connection also means that other evaluation or control systems (e.g. PLC) can easily be connected.

For adaptation to different applications and fluids, a nickel-plated brass installation sleeve which is pressure-resistant up to 10 bar is available as an accessory.

Pin connections:

Binder series 714 M18 | M12x1

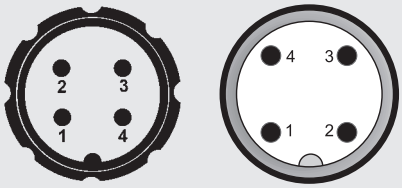

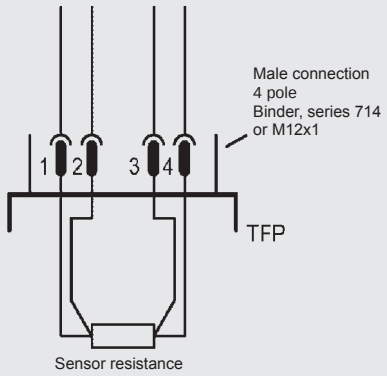

Technical data:

Temperature probe	
Measuring element	PT 100
Measuring range	-40 .. +125 °C (-40 .. +257 °F)
Probe length	95.5 mm
Probe diameter	6 mm
Parts in contact with fluid	Brass
CE mark	EN 61000-6-1 / 2 / 3 / 4
Sensor current	0.3 .. 1.0 mA
Tank installation sleeve for TFP 100 (Accessory, not supplied)	
Pressure resistance	10 bar
Parts in contact with fluid	CuZn39Pb3 (brass), nickel-plated

Model code:

TFP 10X – 000

Separate temperature probe

Electrical connection

4 = male, 4 pole Binder series 714 M18 (mating connector supplied)
6 = male, 4 pole M12x1 (mating connector not supplied)

Modification number

000 = standard

TFP 104-000 Part no.: 904696
TFP 106-000 Part no.: 921330

Dimensions:

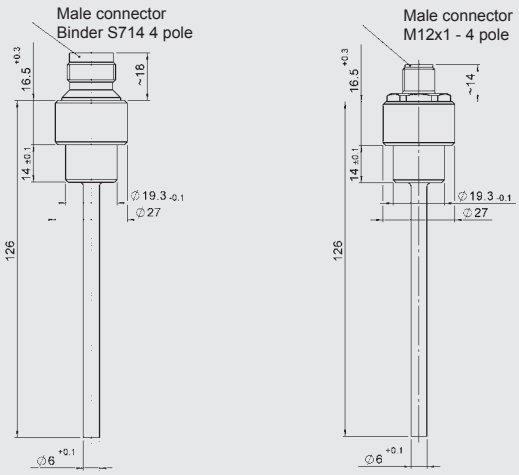

Tank installation sleeve for TFP 100

(to be ordered separately)
Part no.: 906 170

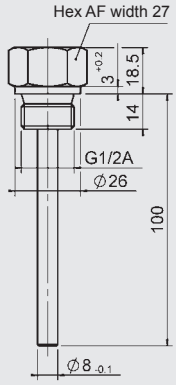

Note:

The information in this brochure relates to the operating conditions and applications described. For applications or operating conditions not described, please contact the relevant technical department.
Subject to technical modifications.

HYDAC ELECTRONIC GMBH
Hauptstr. 27, 66128 Saarbrücken
Germany
Telephone +49 (0)6897 509-01
Fax +49 (0)6897 509-1726
e-mail: electronic@hydac.com
Internet: www.hydac.com

SENSORS FOR DISTANCE AND POSITION [5]

DISTANCE

					Page
CYLINDER-INTEGRATED INSTALLATION					
Magnetostrictive					
HLT 1100-R2		Analogue	Rod	for full integration	281
HLT 1100-R2		CAN	Rod	for full integration	283
HLT 2100-R1		Analogue	Rod	for partial integration	285
HLT 2100-R1		CAN	Rod	for partial integration	287
HLT 2100-R1		Profibus	Rod	for partial integration	289
HLT 2100-R1		SSI	Rod	for partial integration	291
HLT 2100-R1		EtherCAT	Rod	for partial integration	293
HLT 2150-R1		Analogue	Rod	for partial integration	295
HLT 2150-R1		CAN	Rod	for partial integration	297
HLT 2150-R1		SSI	Rod	for partial integration	299
HLT 2102/3	Double / triple redundancy	Analogue	Rod	for partial integration	301
HLT 1100-R2	Functional safety	Analogue	Rod	for full integration	303
HLT 1100-R2	Functional safety	CAN	Rod	for full integration	305
Magnetic-inductive					
HLT 724		Analogue	Rod	for full integration	307
EXTERNALLY MOUNTED					
Magnetostrictive					
HLT 2500-L2		Analogue	Profile		309
HLT 2500-L2		CAN	Profile		311
HLT 2500-L2		Profibus	Profile		313
HLT 2500-L2		SSI	Profile		315
HLT 2500-L2		EtherCAT	Profile		317
HLT 2550-L2		Analogue	Profile		319
HLT 2550-L2		CAN	Profile		321
HLT 2550-L2		SSI	Profile		323
HLT 2500-F1		Analogue	Flat housing		325
HLT 2500-F1		CAN	Flat housing		327
HLT 2500-F1		Profibus	Flat housing		329
HLT 2500-F1		SSI	Flat housing		331
HLT 2500-F1		EtherCAT	Flat housing		333
Inductive					
IWE 40				OEM	341

POSITION

Ultrasound					
HLS 528	Display				335
Magnetic					
HLS 100	Functional safety			OEM	339
Inductive					
IES 2010 / 2015 / 2020				OEM	341
IR light barrier					
HLS 200	Functional safety			OEM	341

Linear Position Transmitter HLT 1100-R2

Magnetostrictive | **For full integration** | **Resolution min. 0.1 mm**

Analogue

Description:

The sensor works on the principle of magnetostriction.

This measuring principle determines with high accuracy the position, distance and/ or speed and is based on elapsed time measurement.

Based on this non-contact and wear-free measuring system, HYDAC offers a version in a pressure-resistant stainless steel housing For full integration in hydraulic cylinders.

The different output signals (analogue) enable connection to all HYDAC ELECTRONIC GmbH measurement and control devices as well as connection to standard evaluation systems (e.g. to PLC controls).

The main fields of application are in mobile hydraulics.

Technical data:

Input data		
Measuring ranges	50 .. 2500 mm	
Model	Rod Ø 10 mm for cylinder full integration [1] Operating pressure: ≤ 450 bar Peak pressure acc. to DIN EN ISO 19879: 630 bar	
Material	Rod: Stainless steel 1.4571 Housing: Stainless steel 1.4301	
Seal	O-ring: NBR Backup ring: PTFE	
Output data		
Output signal, permitted load resistance	Current:	4 .. 20 mA or 20 .. 4 mA, Load resist.: 200 .. 500 Ω
	Voltage:	0 .. 10 V or 10 .. 0 V 0.25 .. 4.75 V or 4.75 .. 0.25 V 0.5 .. 9.5 V 0.5 .. 4.5 V Load resist.: min. 2 kΩ
Resolution	12 bit, min. 0.1 mm	
Non-linearity	≤ ± 0.05 % FS	
Hysteresis	≤ ± 0.1 % FS	
Repeatability	≤ ± 0.1 % FS	
Temperature coefficient	≤ ± 0.01 % FS / °C	
Sampling rate	2 ms	
Environmental conditions		
Operating temperature range	-40 .. +85 °C	
Storage temperature range	-40 .. +100 °C	
Fluid temperature range	-40 .. +120 °C	
CE mark	EN 61000-6-1 / 2 / 3 / 4	
Vibration resistance acc. to DIN EN 60068-2-6 at 10 .. 500 Hz at 5 kHz	≤ 20 g ≤ 15 g	
Shock resistance acc. to DIN EN 60068-2-27 (11 ms)	≤ 50 g	
Protection class acc. to DIN EN 60529	IP 67 (cable outlet) IP 6K9K [2] (separate male flange connector M12x1)	
Installation position	No restrictions	
Other data		
Supply voltage	9 .. 36 V DC	
Residual ripple of supply voltage	≤ 250 mV_{pp}	
Current consumption without output	< 100 mA	
Weight	Depending on length: 100 mm (with 1 m cable): ~310 g 2500 mm (with 1 m cable): ~1030 g	

Note: Reverse polarity protection of the supply voltage, overvoltage, and short circuit protection are provided.
FS (**F**ull **S**cale) = relative to complete measuring range

[1] Other variants available on request.
[2] With mounted mating connector in corresponding protection class

Dimensions:

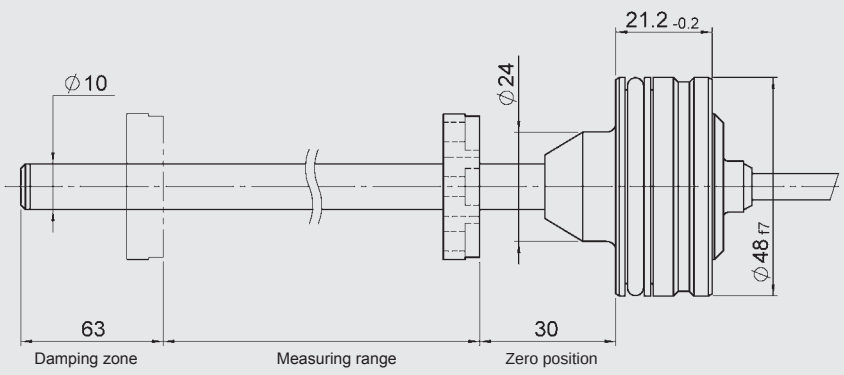

Model code:

HLT 1 1 0 0 – R2 – XXX – XXX – XXXX – 000

Design / geometry type
1 = rod

Model
R2 = rod for cylinder full integration

Electrical connection
Cable output
K01 = jacketed cable, length 1 m
K02 = jacketed cable, length 2 m
K05 = jacketed cable, length 5 m
K10 = jacketed cable, length 10 m

Separate male flange connector M12x1, 4 pole
L06 = 60 mm lead length
L18 = 180 mm lead length
L24 = 240 mm lead length

Output signal
C01 = analogue 4 .. 20 mA, 3-conductor
C02 = analogue 20 .. 4 mA, 3-conductor
B01 = analogue 0 .. 10 V
B02 = analogue 10 .. 0 V
G01 = analogue 0.25 .. 4.75 V
G02 = analogue 4.75 .. 0.25 V
G03 = analogue 0.5 .. 9.5 V
G04 = analogue 0.5 .. 4.5 V

Measuring range in mm (50 .. 2500 mm)
Example
0150 = 150 mm

Modification
000 = standard
003 = modified pin assignment
004 = modified pin assignment

Accessories available: (not supplied with instrument)

ZBL MR17.4	position magnet	part no.: 6119372
ZBL MR22	position magnet	part no.: 6084453
ZBL MR33	position magnet	part no.: 6084207

More detailed information on accessories as well as on further accessories, such as mating connectors, can be found in the Accessories brochure.

Pin connections:

Cable outlet

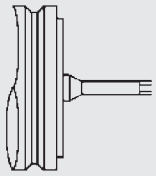

Lead	
brown	$+U_B$
white	0 V
green	Signal

M12x1, 4 pole

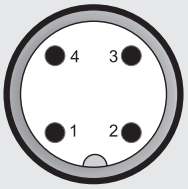

Pin	Mod. 000	Mod. 003	Mod. 004
1	$+U_B$	$+U_B$	n.c.
2	n.c.	Signal	$+U_B$
3	0 V	0 V	0 V
4	Signal	n.c.	Signal

Note:

The information in this brochure relates to the operating conditions and applications described.

For applications or operating conditions not described, please contact the relevant technical department.

Subject to technical modifications.

HYDAC ELECTRONIC GMBH
Hauptstr. 27, 66128 Saarbrücken
Germany
Telephone +49 (0)6897 509-01
Fax +49 (0)6897 509-1726
e-mail: electronic@hydac.com
Internet: www.hydac.com

Linear Position Transmitter HLT 1100-R2

Magnetostrictive | **For full integration** | **Resolution min. 0.1 mm**

CANopen

Description:

The sensor works on the principle of magnetostriction.

This measuring principle determines with high accuracy the position, distance and/ or speed and is based on elapsed time measurement.

Based on this non-contact and wear-free measuring system, HYDAC offers a version in a pressure-resistant stainless steel housing For full integration in hydraulic cylinders.

In the CANopen version, the measured value is digitised and made available to the CAN field bus system via the CANopen protocol. The instrument parameters can be viewed and configured by the user via the CANopen object directory using standard CAN software.

The main fields of application are in mobile hydraulics.

Technical data:

Input data	
Measuring ranges	50 .. 2500 mm
Model	Rod Ø 10 mm for cylinder full integration [1] Operating pressure: ≤ 450 bar Peak pressure acc. to DIN EN ISO 19879: 630 bar
Material	Rod: Stainless steel 1.4571 Housing: Stainless steel 1.4301
Seal	O-ring: NBR Backup ring: PTFE
Output data	
Output signal	CANopen
Resolution	0.1 mm
Non-linearity	≤ ± 0.02 % FS
Hysteresis	≤ ± 0.1 mm
Repeatability	≤ ± 0.1 mm
Temperature coefficient	≤ ± 0.003 % FS / °C
Sampling rate	2 ms
Environmental conditions	
Operating temperature range	-40 .. +85 °C
Storage temperature range	-40 .. +100 °C
Fluid temperature range	-40 .. +120 °C
CE mark	EN 61000-6-1 / 2 / 3 / 4
Vibration resistance acc. to DIN EN 60068-2-6 at 10 .. 500 Hz at 5 kHz	≤ 20 g ≤ 15 g
Shock resistance acc. to DIN EN 60068-2-27 (11 ms)	≤ 50 g
Protection class acc. to DIN EN 60529	IP 67 (cable outlet) IP 6K9K [2] (separate male flange connector M12x1)
Installation position	No restrictions
Protocol data for CANopen	
Communication profile	CiA DS 301 V4.2
NMT-Services	CiA DSP 302 V4.1
Layer setting services and protocol	CiA DSP 305 V2.2
Encoder Device Profile	CiA DS 406 V3.2
Baud rates	10 kbit/s .. 1 Mbit/s acc. to DS305 V2.2
Transmission services - PDO - Transfer	 Measured value as 32 bit and float synchronous, asynchronous, cyclical
Node ID/baud rate	Adjustable via LSS
Other data	
Supply voltage	9 .. 36 V DC
Residual ripple of supply voltage	≤ 250 mV_{PP}
Current consumption without output	< 100 mA
Weight	Depending on length: 100 mm (with 1 m cable): ~310 g 2500 mm (with 1 m cable): ~1030 g

Note: Reverse polarity protection of the supply voltage, overvoltage and short circuit protection are provided.
FS (**F**ull **S**cale) = relative to complete measuring range

[1] Other variants available on request.
[2] With mounted mating connector in corresponding protection class

Dimensions:

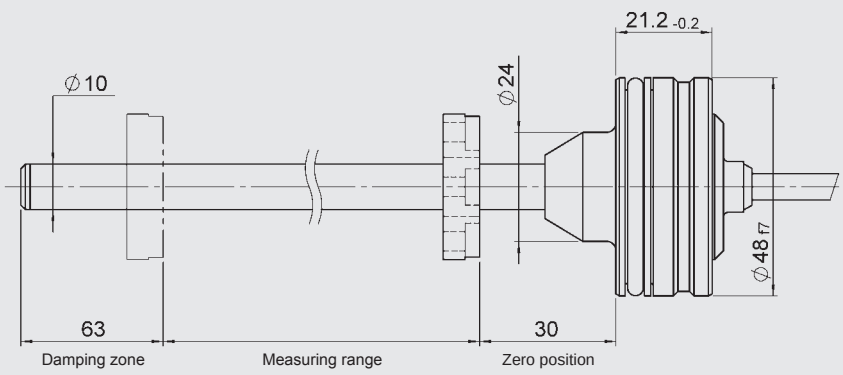

Model code:

HLT 1 1 0 0 – R2 – XXX – F11 – XXXX – 000

Design / geometry type
1 = rod

Model
R2 = rod for cylinder full integration

Electrical connection
Cable output
K01 = jacketed cable, length 1 m
K02 = jacketed cable, length 2 m
K05 = jacketed cable, length 5 m
K10 = jacketed cable, length 10 m

Separate male flange connector M12x1, 5 pole
L06 = 60 mm lead length
L18 = 180 mm lead length
L24 = 240 mm lead length

Output signal
F11 = CANopen

Measuring range in mm (50 .. 2500 mm)
Example
0150 = 150 mm

Modification
000 = standard

Accessories available: (not supplied with instrument)

ZBL MR17.4	position magnet	part no.: 6119372
ZBL MR22	position magnet	part no.: 6084453
ZBL MR33	position magnet	part no.: 6084207

More detailed information on accessories as well as on further accessories, such as mating connectors, can be found in the Accessories brochure.

Pin connections:

Cable outlet

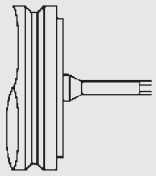

Lead	
brown	$+U_B$
white	0 V
green	CAN_L
yellow	CAN_H

M12x1, 5 pole

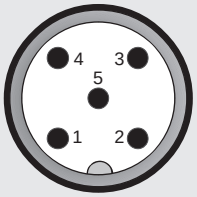

Pin	Signal	Description
1	n.c.	
2	$+U_B$	Supply+
3	0 V	Supply-
4	CAN_H	Bus line dominant high
5	CAN_L	Bus line dominant low

Note:

The information in this brochure relates to the operating conditions and applications described.

For applications or operating conditions not described, please contact the relevant technical department.

Subject to technical modifications.

HYDAC ELECTRONIC GMBH
Hauptstraße 27, 66128 Saarbrücken
Germany
Telephone +49 (0)6897 509-01
Fax +49 (0)6897 509-1726
E-mail: electronic@hydac.com
Internet: www.hydac.com

Linear Position Transmitter HLT 2100-R1

Magnetostrictive | **For partial integration** | **Resolution 5 µm**

Analogue

Description:

The sensor works on the principle of magnetostriction.

This measuring principle determines with high accuracy the position, distance and/ or speed and is based on elapsed time measurement.

Utilising this non-contact and wear-free measuring system, HYDAC offers a version in a pressure-resistant, tubular casing in stainless steel, for direct installation into hydraulic cylinders.

The different output signals (analogue current / voltage) enable connection to all HYDAC ELECTRONIC GmbH measurement and control devices as well as connection to standard evaluation systems (e.g. to PLC controls).

External set inputs for the analogue start point and end point offer an additional possibility of a customised adjustment.

HLT 2100 is primarily used in stationary applications as partially integrated solutions in hydraulic cylinders.

Technical data:

Input data		
Measuring ranges	50 .. 4000 mm	
Model	Rod with M18x1.5 screw-in flange acc. to ISO 6149 Operating pressure: ≤ 450 bar Peak pressure acc. to DIN EN ISO 19879: 750 bar	
Tightening torque, recommended	≤ 50 Nm	
Material	Rod: Stainless steel 1.4571 Housing: Aluminium	
Output data		
Output signal, permitted load resistance	Current:	4 .. 20 mA or 20 .. 4 mA, Load resist.: 200 .. 500 Ω
	Voltage:	0 .. 10 V or 10 .. 0 V, Load resist.: min. 2 kΩ
Resolution	16 bit; min. 0.005 mm	
Non-linearity	± 0.1 mm ± 0.15 mm	(measuring range ≤ 1500 mm) (measuring range > 1500 mm)
Hysteresis	0.02 mm 0.1 mm	(measuring range ≤ 1500 mm) (measuring range > 1500 mm)
Repeatability	≤ 0.005 mm - ≤ 0.05 mm (depends on length)	
Temperature coefficient	≤ ± 0.004 % FS / °C	
Sampling rate	Depending on length: ≤ 1 m: 0.5 ms ≤ 2 m: 1.0 ms ≤ 4 m: 2.0 ms	
Environmental conditions		
Operating temperature range	0 .. +70 °C	
Storage temperature range	-30 .. +85 °C	
CE mark	EN 61000-6-1 / 2 / 3 / 4	
Vibration resistance acc. to DIN EN 60068-2-6 at 50 .. 2000 Hz	≤ 10 g	
Shock resistance acc. to DIN EN 60068-2-27 (11 ms / half sine)	≤ 100 g	
Protection class acc. to DIN EN 60529 [1]	IP 65	
Installation position	No restrictions	
Other data		
Supply voltage	24 V DC ± 10 %	
Residual ripple of supply voltage	≤ 250 mV_{PP}	
Current consumption without output	≤ 100 mA	
Weight	Depending on length: 50 mm: 500 g 4000 mm: 1400 g	

Note: Reverse polarity protection of the supply voltage, overvoltage and short circuit protection are provided.
FS (**F**ull **S**cale) = relative to complete measuring range

[1] With mounted mating connector in corresponding protection class

Dimensions:

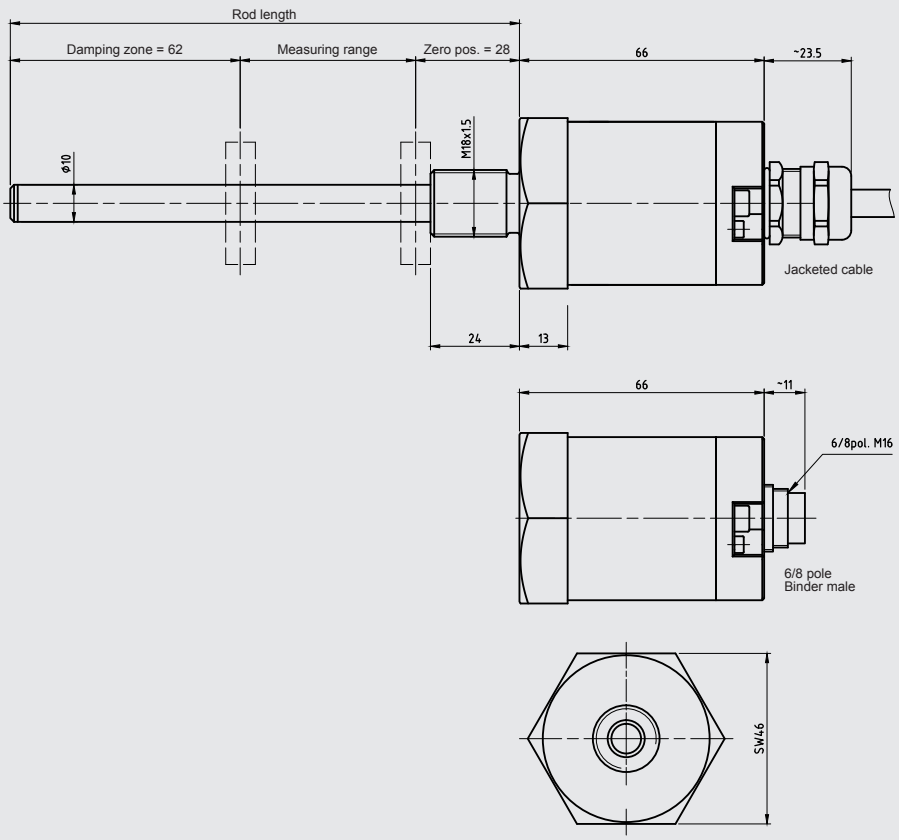

Model code:

HLT 2 1 0 0 – R1 – XXX – XXX – XXXX – 000

Design / geometry type
1 = rod

Model
R1 = rod with M18x1.5 screw-in flange

Electrical connection
K01 = jacketed cable, length 1 m
M06 = male M16, 6 pole
M08 = male M16, 8 pole

Output signal
C01 = analogue 4 .. 20 mA, 3-conductor
C02 = analogue 20 .. 4 mA, 3-conductor
B01 = analogue 0 .. 10 V
B02 = analogue 10 .. 0 V

Measuring range in mm (50 .. 4000 mm)
Example
0150 = 150 mm

Modification
000 = standard

Accessories available: (not supplied with instrument)

ZBL MR17.4	position magnet	part no.: 6119372
ZBL MR22	position magnet	part no.: 6084453
ZBL MR33	position magnet	part no.: 6084207
ZBL MV63	position magnet	part no.: 6084454
ZBL MU38-20	position magnet	part no.: 6084455
Intermediate ring	AD17.4xID13.5x5	part no.: 3903233
Intermediate ring	AD33xID13.5x5	part no.: 3887829

More detailed information on accessories as well as on further accessories, such as mating connectors, can be found in the Accessories brochure.

Pin connections:

Male M16, 6 pole

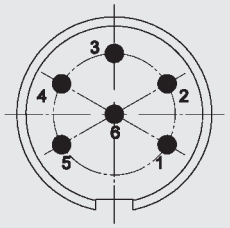

Pin	
1	Signal
2	0 V (analogue output)
3	Start point
4	End point
5	0 V
6	$+U_B$

Male M16, 8 pole

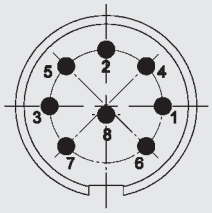

Pin	
1	n.c.
2	0 V (analogue output)
3	Start point
4	End point
5	Signal
6	0 V
7	$+U_B$
8	n.c.

Cable outlet

Lead	
brown	0 V (analogue output)
green	Start point
yellow	End point
grey	Signal
pink	0 V
blue	$+U_B$

Note:

The information in this brochure relates to the operating conditions and applications described.

For applications or operating conditions not described, please contact the relevant technical department.

Subject to technical modifications.

HYDAC ELECTRONIC GMBH
Hauptstraße 27, 66128 Saarbrücken
Germany
Telephone +49 (0)6897 509-01
Fax +49 (0)6897 509-1726
E-mail: electronic@hydac.com
Internet: www.hydac.com

Linear Position Transmitter HLT 2100-R1

Magnetostrictive | **For partial integration** | **Resolution 5 µm**

CANopen

Description:

The sensor works on the principle of magnetostriction.

This measuring principle determines with high accuracy the position, distance and/ or speed and is based on elapsed time measurement.

Utilising this non-contact and wear-free measuring system, HYDAC offers a version in a pressure-resistant, tubular casing in stainless steel, for direct installation into hydraulic cylinders.

In the CANopen version, the measured value is digitised and made available to the CAN field bus system via the CANopen protocol. The instrument parameters can be viewed and configured by the user via the CANopen object directory using standard CAN software.

HLT 2100 is primarily used in stationary applications as partially integrated solutions in hydraulic cylinders.

Technical data:

Input data	
Measuring ranges	50 .. 4000 mm
Model	Rod with M18x1.5 screw-in flange acc. to ISO 6149 Operating pressure: ≤ 450 bar Peak pressure acc. to DIN EN ISO 19879: 750 bar
Tightening torque, recommended	≤ 50 Nm
Material	Rod: Stainless steel 1.4571 Housing: Aluminium
Output data	
Output signal	CANopen
Resolution	16 bit; 0.005 mm [1]
Non-linearity	± 0.1 mm (measuring range ≤ 1500 mm) ± 0.15 mm (measuring range > 1500 mm)
Hysteresis	0.02 mm (measuring range ≤ 1500 mm) 0.1 mm (measuring range > 1500 mm)
Repeatability	≤ 0.005 mm - ≤ 0.05 mm (depends on length)
Temperature coefficient	≤ ± 0.0015 % FS / °C
Sampling rate	Depending on length: ≤ 1 m: 1.0 ms ≤ 2 m: 2.0 ms ≤ 2.5 m: 2.5 ms > 2.5 m: 3.0 ms
Environmental conditions	
Operating temperature range	0 .. +70°C
Storage temperature range	-30 .. +85°C
CE mark	EN 61000-6-1 / 2 / 3 / 4
Vibration resistance acc. to DIN EN 60068-2-6 at 50 .. 2000 Hz	≤ 10 g
Shock resistance acc. to DIN EN 60068-2-27 (11 ms / half sine)	≤ 100 g
Protection class acc. to DIN EN 60529 [2]	IP 65
Installation position	No restrictions
Protocol data for CANopen	
Communication profile	CiA DS 301 V4.2
NMT-Services	CiA DSP 302 V4.1
Layer setting services and protocol	CiA DSP 305 V2.2
Encoder Device Profile	CiA DS 406 V3.2
Baud rates	10 kbit/s .. 1 Mbit/s acc. to DS305 V2.2
Transmission services - PDO - Transfer	 Measured value as 32 bit and float synchronous, asynchronous, cyclical
Node ID/baud rate	Adjustable via LSS
Other data	
Supply voltage	24 V DC ± 10 %
Residual ripple of supply voltage	≤ 250 mV_{PP}
Current consumption without output	≤ 150 mA
Weight	Depending on length: 50 mm: 500 g 4000 mm: 1500 g

Note: Reverse polarity protection of the supply voltage, overvoltage and short circuit protection are provided.
FS (**F**ull **S**cale) = relative to complete measuring range

[1] Other models on request
[2] With mounted mating connector in corresponding protection class

Dimensions:

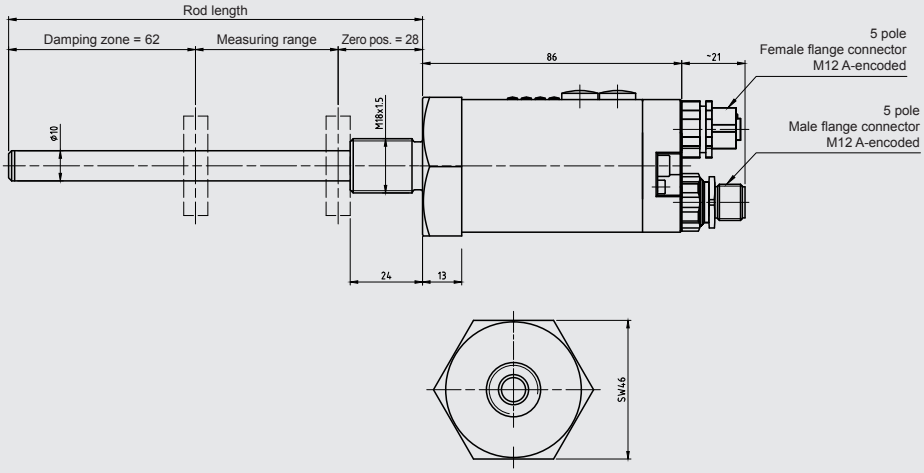

Model code:

HLT 2 1 0 0 – R1 – C61 – F11 – XXXX – 000

Design / geometry type
1 = rod

Model
R1 = rod with M18x1.5 screw-in flange

Electrical connection
C61 = female M12x1, 5 pole + male M12x1, 5 pole

Output signal
F11 = CANopen

Measuring range in mm (50 .. 4000 mm)
Example
0150 = 150 mm

Modification
000 = standard

Accessories available: (not supplied with instrument)

ZBL MR17.4	position magnet	part no.: 6119372
ZBL MR22	position magnet	part no.: 6084453
ZBL MR33	position magnet	part no.: 6084207
ZBL MV63	position magnet	part no.: 6084454
ZBL MU38-20	position magnet	part no.: 6084455
Intermediate ring	AD17.4xID13.5x5	part no.: 3903233
Intermediate ring	AD33xID13.5x5	part no.: 3887829

More detailed information on accessories as well as on further accessories, such as mating connectors, can be found in the Accessories brochure.

Pin connections:

Female M12x1, 5 pole, A-encoded

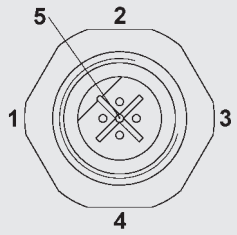

Pin	CANopen_OUT	
1	Housing	Shield/housing
2	$+U_B$	Supply +
3	0 V	Supply -
4	CAN_H	Bus line dominant high
5	CAN_L	Bus line dominant low

Male M12x1, 5 pole, A-encoded

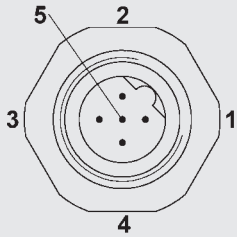

Pin	CANopen_IN	
1	Housing	Shield/housing
2	$+U_B$	Supply +
3	0 V	Supply -
4	CAN_H	Bus line dominant high
5	CAN_L	Bus line dominant low

Note:

The information in this brochure relates to the operating conditions and applications described.

For applications or operating conditions not described, please contact the relevant technical department.

Subject to technical modifications.

HYDAC ELECTRONIC GMBH
Hauptstr. 27, 66128 Saarbrücken
Germany
Telephone +49 (0)6897 509-01
Fax +49 (0)6897 509-1726
e-mail: electronic@hydac.com
Internet: www.hydac.com

Linear Position Transmitter HLT 2100-R1

Magnetostrictive | **For partial integration** | **Resolution 1 µm**

Profibus

Description:

The sensor works on the principle of magnetostriction.

This measuring principle determines with high accuracy the position, distance and/ or speed and is based on elapsed time measurement.

Utilising this non-contact and wear-free measuring system, HYDAC offers a version in a pressure-resistant, tubular casing in stainless steel, for direct installation into hydraulic cylinders.

In the Profibus version, the measured value is digitised and made available to the field bus system via the Profibus protocol.

HLT 2100 is primarily used in stationary applications as partially integrated solutions in hydraulic cylinders.

Technical data:

Input data	
Measuring ranges	50 .. 4000 mm
Model	Rod with M18x1.5 screw-in flange acc. to ISO 6149 Operating pressure: ≤ 450 bar Peak pressure acc. to DIN EN ISO 19879: 750 bar
Tightening torque, recommended	≤ 50 Nm
Material	Rod: Stainless steel 1.4571 Housing: Aluminium
Output data	
Output signal	Profibus
Resolution	0.001 mm [1]
Non-linearity	± 0.1 mm (measuring range ≤ 1500 mm) ± 0.15 mm (measuring range > 1500 mm)
Hysteresis	0.02 mm (measuring range ≤ 1500 mm) 0.1 mm (measuring range > 1500 mm)
Repeatability	≤ 0.005 mm - ≤ 0.05 mm (depends on length)
Temperature coefficient	≤ ± 0.0015 % FS / °C
Sampling rate	Depending on length: ≤ 1 m: 1.0 ms ≤ 1.5 m: 1.5 ms ≤ 2 m: 2.0 ms ≤ 2.5 m: 2.5 ms > 2.5 m: 3.0 ms
Environmental conditions	
Operating temperature range	0 .. +70 °C
Storage temperature range	-30 .. +85 °C
CE mark	EN 61000-6-1 / 2 / 3 / 4
Vibration resistance acc. to DIN EN 60068-2-6 at 50 .. 2000 Hz	≤ 10 g
Shock resistance acc. to DIN EN 60068-2-27 (11 ms / half sine)	≤ 100 g
Protection class acc. to DIN EN 60529 [2]	IP 65
Installation position	No restrictions
Protocol data for Profibus	
Profibus DP V0	IEC 61158, IEC 61784
PNO encoder profile	Class 1 and 2
Transmission rate parameter	9.6 .. 12000 kbit/s
Other data	
Supply voltage	24 V DC ± 10 %
Residual ripple of supply voltage	≤ 250 mV_{PP}
Current consumption without output	≤ 150 mA
Weight	Depending on length: 50 mm: 600 g 4000 mm: 1500 g

Note: Reverse polarity protection of the supply voltage, overvoltage and short circuit protection are provided.
FS (**F**ull **S**cale) = relative to complete measuring range

[1] Other models on request
[2] With mounted mating connector in corresponding protection class

Dimensions:

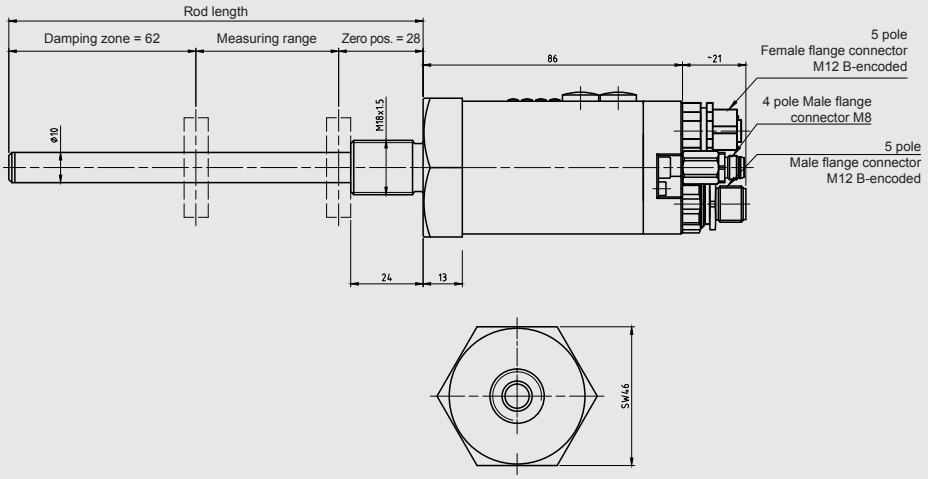

Model code:

HLT 2 1 0 0 – R1 – P61 – F41 – XXXX – 000

Design / geometry type
1 = rod

Model
R1 = rod with M18x1.5 screw-in flange

Electrical connection
P61 = female M12x1, 5 pole + male M12x1, 5 pole
+ male M8, 4 pole

Output signal
F41 = Profibus

Measuring range in mm (50 .. 4000 mm)
Example
0150 = 150 mm

Modification
000 = standard

Accessories available: (not supplied with instrument)

ZBL MR17.4	position magnet	part no.: 6119372
ZBL MR22	position magnet	part no.: 6084453
ZBL MR33	position magnet	part no.: 6084207
ZBL MV63	position magnet	part no.: 6084454
ZBL MU38-20	position magnet	part no.: 6084455
Intermediate ring	AD17.4xID13.5x5	part no.: 3903233
Intermediate ring	AD33xID13.5x5	part no.: 3887829

More detailed information on accessories as well as on further accessories, such as mating connectors, can be found in the Accessories brochure.

Pin connections:

Female M12x1, 5 pole, B-encoded

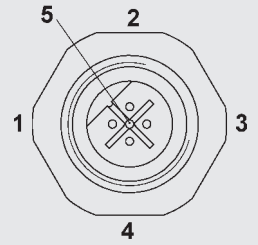

Pin	Profibus_OUT
1	VP, +5 V DC
2	Profibus, Data A
3	0 V
4	Profibus, Data B
5	n.c.
screw connection	Shield/housing

Male M12x1, 5 pole, B-encoded

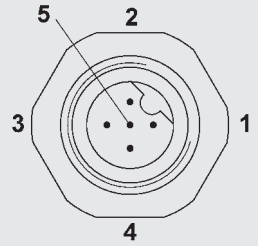

Pin	Profibus_IN
1	n.c.
2	Profibus, Data A
3	n.c.
4	Profibus, Data B
5	n.c.
screw connection	Shield/housing

Male M8x1, 4 pole

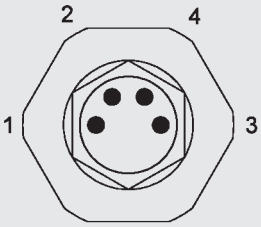

Pin	Profibus_IN
1	$+U_B$
2	n.c.
3	0 V
4	n.c.

Note:

The information in this brochure relates to the operating conditions and applications described.

For applications or operating conditions not described, please contact the relevant technical department.

Subject to technical modifications.

HYDAC ELECTRONIC GMBH
Hauptstr. 27, 66128 Saarbrücken
Germany
Telephone +49 (0)6897 509-01
Fax +49 (0)6897 509-1726
e-mail: electronic@hydac.com
Internet: www.hydac.com

Linear Position Transmitter HLT 2100-R1

Magnetostrictive | **For partial integration** | **Resolution 1 µm**

Synchronous serial interface

Description:

The sensor works on the principle of magnetostriction.

This measuring principle determines with high accuracy the position, distance and/ or speed and is based on elapsed time measurement.

Utilising this non-contact and wear-free measuring system, HYDAC offers a version in a pressure-resistant, tubular casing in stainless steel, for direct installation into hydraulic cylinders.

In the version with synchronous serial interface, the measured value is made available via synchronous and symmetrical clock and data signals.

HLT 2100 is primarily used in stationary applications as partially integrated solutions in hydraulic cylinders.

Technical data:

Input data	
Measuring ranges	50 .. 4000 mm
Model	Rod with M18x1.5 screw-in flange acc. to ISO 6149 Operating pressure: ≤ 450 bar Peak pressure acc. to DIN EN ISO 19879: 750 bar
Tightening torque, recommended	≤ 50 Nm
Material	Rod: Stainless steel 1.4571 Housing: Aluminium
Output data	
Output signal	SSI
Resolution	0.001 mm [1]
Non-linearity	± 0.1 mm (measuring range ≤ 1500 mm) ± 0.15 mm (measuring range > 1500 mm)
Hysteresis	0.02 mm (measuring range ≤ 1500 mm) 0.1 mm (measuring range > 1500 mm)
Repeatability	≤ 0.005 mm - ≤ 0.05 mm (depends on length)
Temperature coefficient	≤ ± 0.0015 % FS / °C
Sampling rate	Depending on length: ≤ 1.0 m: 0.5 ms ≤ 2.0 m: 1.0 ms ≤ 4.0 m: 2.0 ms
Environmental conditions	
Operating temperature range	0 .. +70 °C
Storage temperature range	-30 .. +85 °C
CE mark	EN 61000-6-1 / 2 / 3 / 4
Vibration resistance acc. to DIN EN 60068-2-6 at 50 .. 2000 Hz	≤ 10 g
Shock resistance acc. to DIN EN 60068-2-27 (11 ms / half sine)	≤ 100 g
Protection class acc. to DIN EN 60529 [2]	IP 65
Installation position	No restrictions
Relevant data for SSI	
SSI clock input	Optocoupler
SSI data output	RS-422, 2-wire
SSI clock frequency	95 .. 1000 kHz
SSI monotime, typical	20 µs
Other data	
Supply voltage	24 V DC ± 10 %
Residual ripple of supply voltage	≤ 250 mV_{PP}
Current consumption without output	≤ 100 mA
Weight	Depending on length: 50 mm: 500 g 4000 mm: 1400 g

Note: Reverse polarity protection of the supply voltage, overvoltage and short circuit protection are provided.
FS (**F**ull **S**cale) = relative to complete measuring range

[1] Other models on request

[2] With mounted mating connector in corresponding protection class

Dimensions:

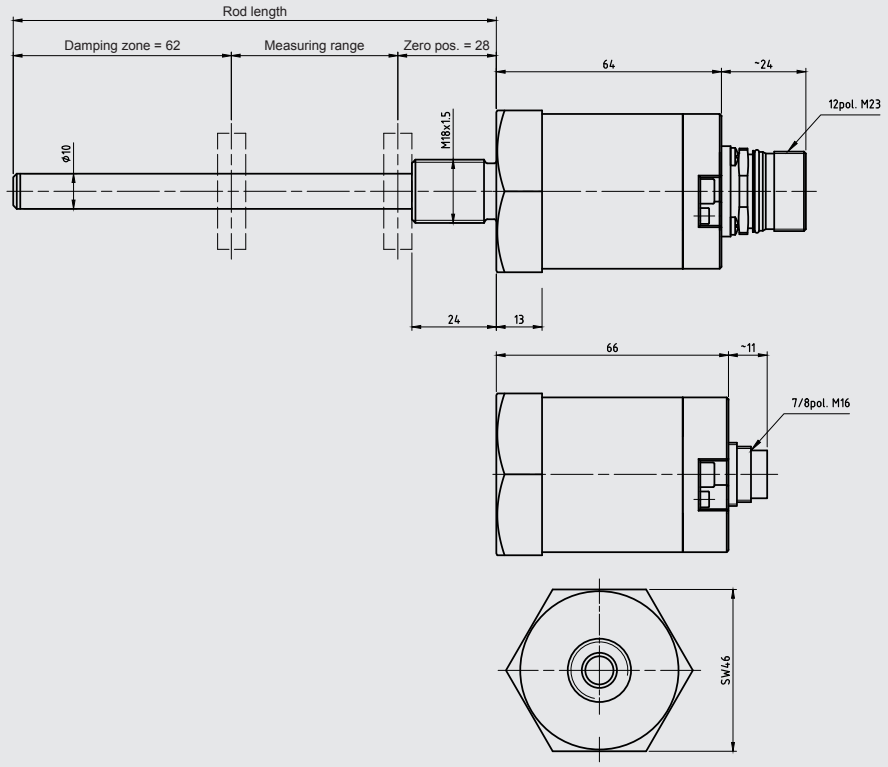

Model code:

HLT 2 1 0 0 - R1 - XXX - S16 - XXXX - XXX - XXX - 000

Design / geometry type
1 = rod

Model
R1 = rod with M18x1.5 screw-in flange

Electrical connection
S00 = CONTACT male, 12 pole
M07 = male M16, 7 pole
M08 = male M16, 8 pole

Output signal
S16 = SSI

Measuring range in mm (50 .. 4000 mm)
Example
0150 = 150 mm

Code
B24 = binary code 24 bit
B25 = binary code 25 bit
G24 = Gray code 24 bit
G25 = Gray code 25 bit

System resolution
001 = 1 µm
002 = 2 µm
005 = 5 µm
010 = 10 µm
100 = 100 µm

Modification
000 = standard

Accessories available: (not supplied with instrument)

ZBL MR17.4	position magnet	part no.: 6119372
ZBL MR22	position magnet	part no.: 6084453
ZBL MR33	position magnet	part no.: 6084207
ZBL MV63	position magnet	part no.: 6084454
ZBL MU38-20	position magnet	part no.: 6084455
Intermediate ring	AD17.4xID13.5x5	part no.: 3903233
Intermediate ring	AD33xID13.5x5	part no.: 3887829

More detailed information on accessories as well as on further accessories, such as mating connectors, can be found in the Accessories brochure.

Pin connections:

CONTACT male, 12 pole

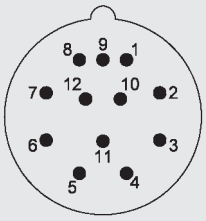

Pin	
1	SSI_Clock-_IN
2	SSI_Clock+_IN
3	SSI_DATA+_OUT
4	SSI_DATA-_OUT
5	RS 485 +_IN/OUT
6	RS 485 -_IN/OUT
7	n.c.
8	Direction IN
9	Preset1_IN
10	n.c.
11	$+U_B$_ IN
12	0 V _IN

Male M16x1, 7 pole

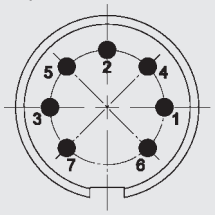

Pin	Signal	Description
1	SSI_DATA-_OUT	Data output -
2	SSI_DATA+_OUT	Data output +
3	SSI_Clock+_IN	Clock input +
4	SSI_Clock-_IN	Clock input -
5	Supply Voltage IN	Supply voltage
6	Ground IN	Ground
7	not connected	

Male M16x1, 8 pole

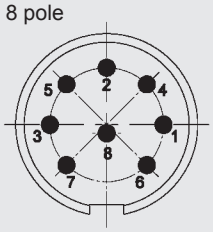

Pin	Signal	Description
1	SSI_Clock+_IN	Clock input +
2	SSI_DATA+_OUT	Data output +
3	SSI_Clock-_IN	Clock input -
4	Ser.Program+_IN/OUT	Ser. programming interface RS485
5	SSI_DATA-_OUT	Data output -
6	Ground IN	Ground
7	Supply Voltage IN	Supply voltage
8	Ser.Program-_IN/OUT	Ser. programming interface RS485

Note:

The information in this brochure relates to the operating conditions and applications described.

For applications or operating conditions not described, please contact the relevant technical department.

Subject to technical modifications.

HYDAC ELECTRONIC GMBH
Hauptstraße 27, 66128 Saarbrücken / Germany
Telephone +49 (0)6897 509-01
Fax +49 (0)6897 509-1726
E-mail: electronic@hydac.com
Internet: www.hydac.com

Linear Position Transmitter HLT 2100-R1

Magnetostrictive | **For partial integration** | **Resolution 1 µm**

EtherCAT

EtherCAT

Description:

The sensor works on the principle of magnetostriction.

This measuring principle determines with high accuracy the position, distance and/ or speed and is based on elapsed time measurement.

Utilising this non-contact and wear-free measuring system, HYDAC offers a version in a pressure-resistant, tubular casing in stainless steel, for direct installation into hydraulic cylinders.

In the EtherCAT version, the measured value is digitised and made available to the field bus system via the EtherCAT protocol.

HLT 2100 is primarily used in stationary applications as partially integrated solutions in hydraulic cylinders.

Technical data:

Input data	
Measuring ranges	50 .. 4000 mm
Model	Rod with M18x1.5 screw-in flange acc. to ISO 6149 Operating pressure: ≤ 450 bar Peak pressure acc. to DIN EN ISO 19879: 750 bar
Tightening torque, recommended	≤ 50 Nm
Material	Rod: Stainless steel 1.4571 Housing: Aluminium
Output data	
Output signal	EtherCAT
Resolution	0.001 mm [1]
Non-linearity	± 0.1 mm (measuring range ≤ 1500 mm) ± 0.15 mm (measuring range > 1500 mm)
Hysteresis	0.02 mm (measuring range ≤ 1500 mm) 0.1 mm (measuring range > 1500 mm)
Repeatability	≤ 0.005 mm - ≤ 0.05 mm (depends on length)
Temperature coefficient	≤ ± 0.0015 % FS / °C
Sampling rate	Depending on length: ≤ 0.5 m: 0.5 ms ≤ 1.0 m: 1.0 ms ≤ 2.0 m: 1.5 ms > 2.0 m: 2.0 ms
Environmental conditions	
Operating temperature range	0 .. +70 °C
Storage temperature range	-30 .. +85 °C
CE mark	EN 61000-6-1 / 2 / 3 / 4
Vibration resistance acc. to DIN EN 60068-2-6 at 50 .. 2000 Hz	≤ 10 g
Shock resistance acc. to DIN EN 60068-2-27 (11 ms / half sine)	≤ 100 g
Protection class acc. to DIN EN 60529 [2]	IP 65
Installation position	No restrictions
Protocol data for EtherCAT	
EtherCAT	IEC 61158-1-6, IEC 61784-2
Physical Layer	Fast Ethernet, ISO/IEC 8802-3
Device profile	CoE, CiA DS-406
Transmission rate parameter	100 Mbit/s
Cycle time	100 .. 20000 µs
Other data	
Supply voltage	24 V DC ± 10 %
Residual ripple of supply voltage	≤ 250 mV_{PP}
Current consumption without output	≤ 300 mA
Weight	Depending on length: 50 mm: 600 g 4000 mm: 1500 g

Note: Reverse polarity protection of the supply voltage, overvoltage and short circuit protection are provided.
FS (**F**ull **S**cale) = relative to complete measuring range

[1] Other models on request
[2] With mounted mating connector in corresponding protection class

Dimensions:

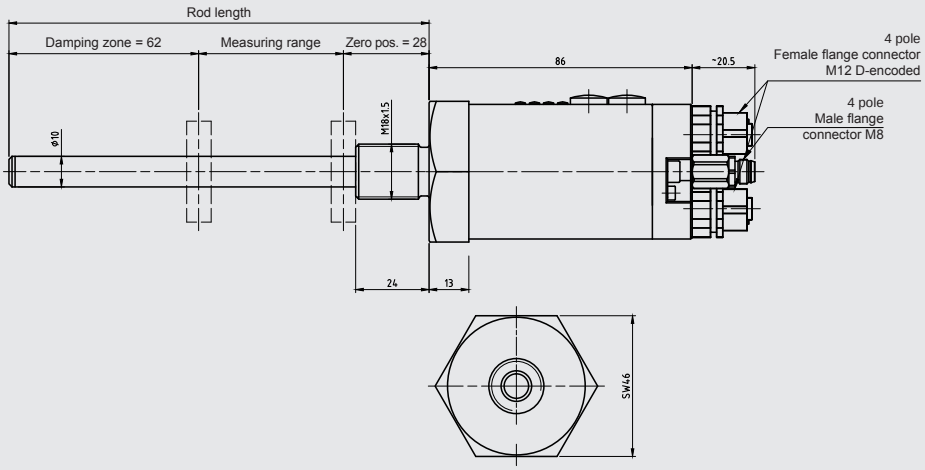

Model code:

HLT 2 1 0 0 – R1 – E51 – F51 – XXXX – 000

Design / geometry type
1 = rod

Model
R1 = rod with M18x1.5 screw-in flange

Electrical connection
E51 = 2 female M12x1, 4 pole + male M8, 4 pole

Output signal
F51 = EtherCAT

Measuring range in mm (50 .. 4000 mm)
Example
0150 = 150 mm

Modification
000 = standard

Accessories available: (not supplied with instrument)

ZBL MR17.4	position magnet	part no.: 6119372
ZBL MR22	position magnet	part no.: 6084453
ZBL MR33	position magnet	part no.: 6084207
ZBL MV63	position magnet	part no.: 6084454
ZBL MU38-20	position magnet	part no.: 6084455
Intermediate ring	AD17.4xID13.5x5	part no.: 3903233
Intermediate ring	AD33xID13.5x5	part no.: 3887829

More detailed information on accessories as well as on further accessories, such as mating connectors, can be found in the Accessories brochure.

Pin connections:

Female M12x1, 4 pole, D-encoded

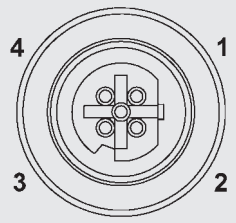

Pin	Port IN / Port OUT
1	Transmission data +
2	Receive data +
3	Transmission data -
4	Receive data -

Male M8x1, 4 pole

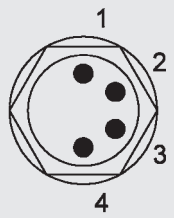

Pin	
1	$+U_B$
2	n.c.
3	0 V
4	n.c.

Note:

The information in this brochure relates to the operating conditions and applications described.

For applications or operating conditions not described, please contact the relevant technical department.

Subject to technical modifications.

HYDAC ELECTRONIC GMBH
Hauptstr. 27, 66128 Saarbrücken
Germany
Telephone +49 (0)6897 509-01
Fax +49 (0)6897 509-1726
e-mail: electronic@hydac.com
Internet: www.hydac.com

Linear Position Transmitter HLT 2150-R1

Magnetostrictive | **For partial integration** | **Resolution 0.1 mm**

Analogue

Description:

The HLT 2150 is a linear position transmitter which, due to its compact design, was developed in particular for use in applications where space is very limited. A wide range of accessories such as magnets is available for individual adaptation to the particular application.

The HLT 2150 is suited for measuring ranges up to 2.5 m.
The different output signals (analogue current / voltage) enable connection to all HYDAC ELECTRONIC GmbH measurement and control devices as well as connection to standard evaluation systems (e.g. to PLC controls).

The main fields of application for the HLT 2150 are, for example, general positioning tasks in mechanical engineering and in mobile and stationary hydraulics, as a partially integrated solution in hydraulic cylinders.

Technical data:

Input data		
Measuring ranges	50 .. 2500 mm	
Model	Rod with M18x1.5 screw-in flange acc. to ISO 6149 Operating pressure: ≤ 450 bar Peak pressure acc. to DIN EN ISO 19879: 630 bar	
Tightening torque, recommended	50 Nm	
Material	Rod: Stainless steel 1.4571 Housing: Stainless steel 1.4301	
Output data		
Output signal, permitted load resistance	Current:	4 .. 20 mA or 20 .. 4 mA Load resist.: 200 .. 500 Ω
	Voltage:	0 .. 10 V or 10 .. 0 V 0.25 .. 4.75 V or 4.75 .. 0.25 V 0.5 .. 9.5 V 0.5 .. 4.5 V Load resist.: min 2 kΩ
Resolution	12 bit, ≥ 0.1 mm	
Non-linearity	≤ ± 0.05 % FS	
Hysteresis	≤ ± 0.1 % FS	
Repeatability	≤ ± 0.1 % FS	
Temperature coefficient	≤ ± 0.01 % FS / °C	
Sampling rate	2 ms	
Environmental conditions		
Operating temperature range	-40 .. +85 °C	
Storage temperature range	-40 .. +100 °C	
Fluid temperature range	-40 .. +120 °C	
CE mark	EN 61000-6-1 / 2 / 3 / 4	
Vibration resistance acc. to DIN EN 60068-2-6 at 10 .. 500 Hz at 5 kHz	≤ 20 g ≤ 15 g	
Shock resistance acc. to DIN EN 60068-2-27 (11 ms)	≤ 50 g	
Protection class acc. to DIN EN 60529[1)]	IP 67	
Installation position	No restrictions	
Other data		
Supply voltage	9 .. 30 V DC	
Residual ripple of supply voltage	≤ 250 mV_{pp}	
Current consumption without output	< 100 mA	
Weight	Depending on length: 50 mm: ~ 400 g 2500 mm: ~ 1100 g	

Note: Reverse polarity protection of the supply voltage, overvoltage and short circuit protection are provided.
FS (**F**ull **S**cale) = relative to complete measuring range

[1)] With mounted mating connector in corresponding protection class

Dimensions:

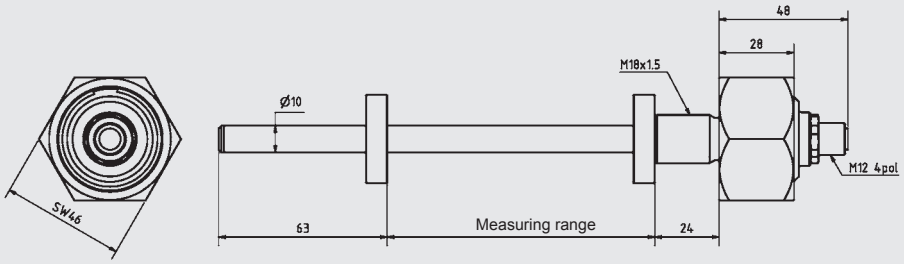

Model code:

HLT 2 1 5 0 – R1 – 006 – XXX – XXXX – 000

Design / geometry type
1 = rod

Model
R1 = rod with M18x1.5 screw-in flange

Electrical connection
006 = male M12x1, 4 pole

Output signal
C01 = analogue 4 .. 20 mA, 3-conductor
C02 = analogue 20 .. 4 mA, 3-conductor
B01 = analogue 0 .. 10 V
B02 = analogue 10 .. 0 V
G01 = analogue 0.25 .. 4.75 V
G02 = analogue 4.75 .. 0.25 V
G03 = analogue 0.5 .. 9.5 V
G04 = analogue 0.5 .. 4.5 V

Measuring range in mm (50 .. 2500 mm)
Example
0150 = 150 mm

Modification
000 = standard

Notes:
The position magnet must be ordered separately.

Scope of delivery:
- HLT 2150
- Operating manual

Accessories available: (not supplied with instrument)

ZBL MR17.4	position magnet	part no.: 6119372
ZBL MR22	position magnet	part no.: 6084453
ZBL MR33	position magnet	part no.: 6084207
ZBL MV63	position magnet	part no.: 6084454
Intermediate ring	AD33xID13.5x5	part no.: 3887829

More detailed information on accessories as well as on further accessories, such as mating connectors, can be found in the Accessories brochure.

Pin connections:

M12x1, 4 pole

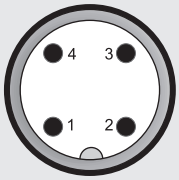

Pin	
1	$+U_B$
2	n.c.
3	0 V
4	Signal

Note:

The information in this brochure relates to the operating conditions and applications described.

For applications or operating conditions not described, please contact the relevant technical department.

Subject to technical modifications.

HYDAC ELECTRONIC GMBH
Hauptstraße 27, 66128 Saarbrücken
Germany
Telephone +49 (0)6897 509-01
Fax +49 (0)6897 509-1726
E-mail: electronic@hydac.com
Internet: www.hydac.com

Linear Position Transmitter HLT 2150-R1

Magnetostrictive | **For partial integration** | **Resolution 0.1 mm**

CANopen

Description:

The HLT 2150 is a linear position transmitter which, due to its compact design, was developed in particular for use in applications where space is very limited. A wide range of accessories such as magnets is available for individual adaptation to the particular application.

The HLT 2150 is suited for measuring ranges up to 2.5 m.
In the CANopen version, the measured value is digitised and made available to the CAN field bus system via the CANopen protocol. The instrument parameters can be viewed and configured by the user via the CANopen object directory using standard CAN software.

The main fields of application for the HLT 2150 are, for example, general positioning tasks in mechanical engineering and in mobile and stationary hydraulics, as a partially integrated solution in hydraulic cylinders.

Technical data:

Input data	
Measuring ranges	50 .. 2500 mm
Model	Rod with M18x1.5 screw-in flange acc. to ISO 6149 Operating pressure: ≤ 450 bar Peak pressure acc. to DIN EN ISO 19879: 630 bar
Tightening torque, recommended	50 Nm
Material	Rod: Stainless steel 1.4571 Housing: Stainless steel 1.4301
Output data	
Output signal	CANopen
Resolution	0.1 mm
Non-linearity	≤ ± 0.02 % FS
Hysteresis	≤ ± 0.1 mm
Repeatability	≤ ± 0.1 mm
Temperature coefficient	≤ ± 0.003 % FS / °C
Sampling rate	2 ms
Environmental conditions	
Operating temperature range	-40 .. +85 °C
Storage temperature range	-40 .. +100 °C
Fluid temperature range	-40 .. +120 °C
CE mark	EN 61000-6-1 / 2 / 3 / 4
Vibration resistance acc. to DIN EN 60068-2-6 at 10 .. 500 Hz at 5 kHz	 ≤ 20 g ≤ 15 g
Shock resistance acc. to DIN EN 60068-2-27 (11 ms)	≤ 50 g
Protection class acc. to DIN EN 60529[1)]	IP 67
Installation position	No restrictions
Protocol data for CANopen	
Communication profile	CiA DS 301 V4.2
NMT-Services	CiA DSP 302 V4.1
Layer setting services and protocol	CiA DSP 305 V2.2
Encoder Device Profile	CiA DS 406 V3.2
Baud rates	10 kbit/s .. 1 Mbit/s acc. to DS305 V2.2
Transmission services - PDO - Transfer	 Measured value as 32 bit and float synchronous, asynchronous, cyclical
Node ID/baud rate	Adjustable via LSS
Other data	
Supply voltage	12 .. 30 V DC
Residual ripple of supply voltage	≤ 250 mV_{pp}
Current consumption without output	< 100 mA
Weight	Depending on length: 50 mm: ~ 400 g 2500 mm: ~ 1100 g

Note: Reverse polarity protection of the supply voltage, overvoltage and short circuit protection are provided.
FS (**F**ull **S**cale) = relative to complete measuring range

[1)] With mounted mating connector in corresponding protection class

Dimensions:

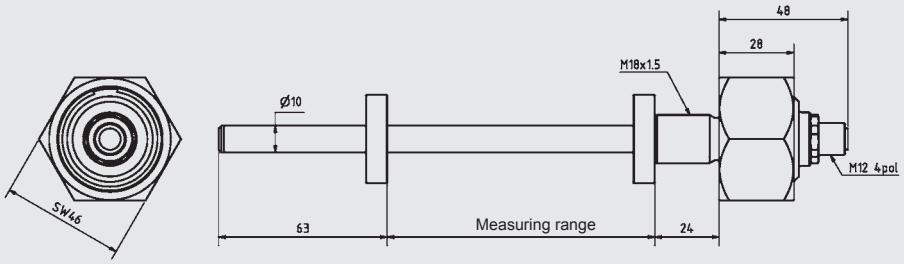

Model code:

HLT 2 1 5 0 – R1 – 008 – F11 – XXXX – 000

Design / geometry type
1 = rod

Model
R1 = rod with M18x1.5 screw-in flange

Electrical connection
008 = male M12x1, 5 pole

Output signal
F11 = CANopen

Measuring range in mm (50 .. 2500 mm)
Example
0150 = 150 mm

Modification
000 = standard

Notes:
The position magnet must be ordered separately.

Scope of delivery:
- HLT 2150
- Operating manual

Accessories available: (not supplied with instrument)

ZBL MR17.4	position magnet	part no.: 6119372
ZBL MR22	position magnet	part no.: 6084453
ZBL MR33	position magnet	part no.: 6084207
ZBL MV63	position magnet	part no.: 6084454
Intermediate ring	AD33xID13.5x5	part no.: 3887829

More detailed information on accessories as well as on further accessories, such as mating connectors, can be found in the Accessories brochure.

Pin connections:

M12x1, 5 pole

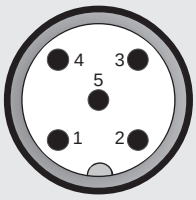

Pin	Signal	Description
1	n.c.	
2	$+U_B$	Supply+
3	0 V	Supply-
4	CAN_H	Bus line dominant high
5	CAN_L	Bus line dominant low

Note:

The information in this brochure relates to the operating conditions and applications described.

For applications or operating conditions not described, please contact the relevant technical department.

Subject to technical modifications.

HYDAC ELECTRONIC GMBH
Hauptstraße 27, 66128 Saarbrücken
Germany
Telephone +49 (0)6897 509-01
Fax +49 (0)6897 509-1726
E-mail: electronic@hydac.com
Internet: www.hydac.com

Linear Position Transmitter HLT 2150-R1

Magnetostrictive | **For partial integration** | **Resolution 0.1 mm**

Synchronous serial interface

Description:

The HLT 2150 is a linear position transmitter which, due to its compact design, was developed in particular for use in applications where space is very limited. A wide range of accessories such as magnets is available for individual adaptation to the particular application.

The HLT 2150 is suited for measuring ranges up to 2.5 m.
In the version with synchronous serial interface, the measured value is made available via synchronous and symmetrical clock and data signals.

The main fields of application for the HLT 2150 are, for example, general positioning tasks in mechanical engineering and in mobile and stationary hydraulics, as a partially integrated solution in hydraulic cylinders.

Technical data:

Input data	
Measuring ranges	50 .. 2500 mm
Model	Rod with M18x1.5 screw-in flange acc. to ISO 6149 Operating pressure: ≤ 450 bar Peak pressure acc. to DIN EN ISO 19879: 630 bar
Tightening torque, recommended	50 Nm
Material	Rod: Stainless steel 1.4571 Housing: Stainless steel 1.4301
Output data	
Output signal	SSI
Resolution	0.1 mm
Non-linearity	≤ ± 0.02 % FS
Hysteresis	≤ ± 0.1 mm
Repeatability	≤ ± 0.1 mm
Temperature coefficient	≤ ± 0.003 % FS / °C
Sampling rate	2 ms
Environmental conditions	
Operating temperature range	-40 .. +85 °C
Storage temperature range	-40 .. +100 °C
Fluid temperature range	-40 .. +120 °C
CE mark	EN 61000-6-1 / 2 / 3 / 4
Vibration resistance acc. to DIN EN 60068-2-6 at 10 .. 500 Hz at 5 kHz	 ≤ 20 g ≤ 15 g
Shock resistance acc. to DIN EN 60068-2-27 (11 ms)	≤ 50 g
Protection class acc. to DIN EN 60529[1)]	IP 67
Installation position	No restrictions
Relevant data for SSI	
SSI clock input	Optocoupler
SSI data output	RS 422, 2-wire
SSI clock frequency	95 .. 1000 kHz
SSI monotime, typical	20 µs
Other data	
Supply voltage	12 .. 30 V DC
Residual ripple of supply voltage	≤ 250 mV_{pp}
Current consumption without output	< 100 mA
Weight	Depending on length: 50 mm: ~ 400 g 2500 mm: ~ 1100 g

Note: Reverse polarity protection of the supply voltage, overvoltage and short circuit protection are provided.
FS (**F**ull **S**cale) = relative to complete measuring range

[1)] With mounted mating connector in corresponding protection class

Dimensions:

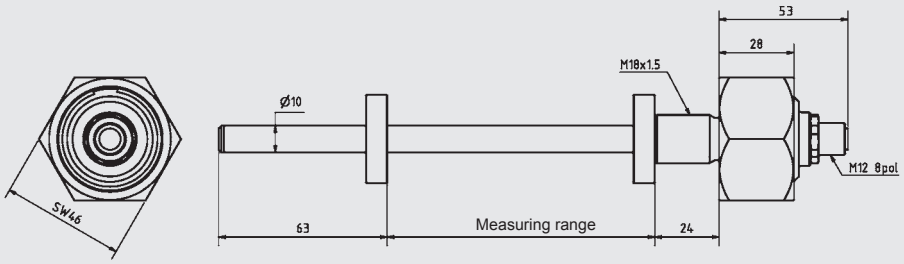

Model code:

HLT 2 1 5 0 - R1 - 00P - S16 - XXXX - XXX - XXX - 000

Design / geometry type
1 = rod

Model
R1 = rod with
M18x1.5 screw-in flange

Electrical connection
00P = male M12x1, 8 pole

Output signal
S16 = SSI

Measuring range in mm (50 .. 2500 mm)
Example
0150 = 150 mm

Code
B24 = binary code 24 bit
B25 = binary code 25 bit
G24 = Gray code 24 bit
G25 = Gray code 25 bit

System resolution
100 = 100 µm
200 = 200 µm
300 = 300 µm

Modification
000 = standard

Notes:
The position magnet must be ordered separately.

Scope of delivery:
- HLT 2150
- Operating manual

Accessories available: (not supplied with instrument)

ZBL MR17.4	position magnet	part no.: 6119372
ZBL MR22	position magnet	part no.: 6084453
ZBL MR33	position magnet	part no.: 6084207
ZBL MV63	position magnet	part no.: 6084454
Intermediate ring	AD33xID13.5x5	part no.: 3887829

More detailed information on accessories as well as on further accessories, such as mating connectors, can be found in the Accessories brochure.

Pin connections:

M12x1, 8 pole

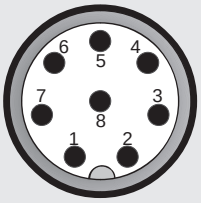

Pin	Signal	Description
1	Ground IN	Ground
2	Supply Voltage IN	Supply voltage
3	SSI_Clock-_IN	Clock input -
4	SSI_Clock+_IN	Clock input +
5	SSI_DATA-_OUT	Data output -
6	SSI_DATA+_OUT	Data output +
7	not connected	
8	not connected	

Note:

The information in this brochure relates to the operating conditions and applications described.

For applications or operating conditions not described, please contact the relevant technical department.

Subject to technical modifications.

HYDAC ELECTRONIC GMBH
Hauptstraße 27, 66128 Saarbrücken
Germany
Telephone +49 (0)6897 509-01
Fax +49 (0)6897 509-1726
E-mail: electronic@hydac.com
Internet: www.hydac.com

Linear Position Transmitter HLT 2102 / HLT 2103

Magnetostrictive | **For partial integration** | **Resolution 0.04 mm**

Double or triple redundancy Analogue

Description:

The linear position transmitters with a multi-redundant measuring system HLT 2102 (double redundancy) and HLT 2103 (triple redundancy) were particularly designed for applications where access to the built-in measuring systems is extremely difficult, which increases the requirements for the availability and the safety of the system.

The measuring systems HLT 2102 and HLT 2103 are designed with 2 or 3 independent sensor elements which enables separate utilisation of each element or use in safety circuits, for example as a system with double or triple redundancy.

The linear position sensors are available for measuring ranges up to 2 m. The measured values are given out via an analogue output signal. External set inputs for the analogue start point and end point offer an additional possibility of a customised adjustment.

The main fields of application for the HLT 2102 and HLT 2103 are, for example, general positioning tasks in stationary hydraulics, as a partially integrated solution in hydraulic cylinders.

Technical data:

Input data	
Measuring ranges [1]	50 .. 2000 mm
Model	Rod with M18x1.5 screw-in flange acc. to ISO 6149 Operating pressure: ≤ 600 bar Peak pressure acc. to DIN EN ISO 19879: 750 bar
Tightening torque, recommended	50 Nm
Material	Rod: Stainless steel 1.4571 Housing: Stainless steel 1.4301
Output data	
Output signal, permitted load resistance	4 .. 20 mA or 0 .. 20 mA, load resist.: 200 .. 500 Ω
Resolution	16 bit; 0.04 mm
Non-linearity	± 0.10 mm (measuring range ≤ 1500 mm) ± 0.15 mm (measuring range > 1500 mm)
Hysteresis	± 0.02 mm (measuring range ≤ 1500 mm) ± 0.1 mm (measuring range > 1500 mm)
Repeatability	0.04 mm
Temperature coefficient	≤ ± 0.004 % FS / °C
Sampling rate	Depending on length: 1.5 ms (measuring range ≤ 500 mm) 3.0 ms (measuring range 500 .. 2000 mm) 4.5 ms (measuring range > 2000 mm)
Environmental conditions	
Operating temperature range	0 .. +70 °C, optionally -20 .. +70 °C
Storage temperature range	-30 .. +85 °C
CE mark	EN 61000-6-1 / 2 / 3 / 4
Vibration resistance acc. to DIN EN 60068-2-6 at 50 .. 2000 Hz	≤ 10 g
Shock resistance acc. to DIN EN 60068-2-27 (11 ms)	≤ 100 g
Protection class acc. to DIN EN 60529 [2]	IP 65
Installation position	No restrictions
Other data	
Supply voltage	24 V DC ± 10 %
Residual ripple of supply voltage	≤ 250 mV_{pp}
Current consumption without output	≤ 100 mA per channel
Weight	Depending on length: 50 mm: ~ 800 g 2000 mm: ~1400 g

Note: Reverse polarity protection of the supply voltage, overvoltage and short circuit protection are provided.
FS (**F**ull **S**cale) = relative to complete measuring range

[1] Other measuring lengths on request.
[2] With mounted mating connector in corresponding protection class

Dimensions:

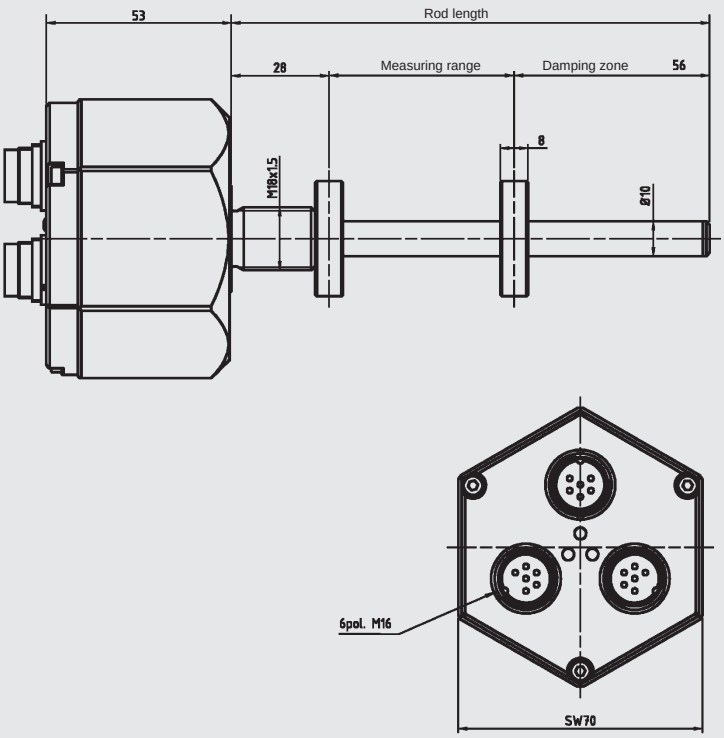

Pin connections:

M16x1, 6 pole

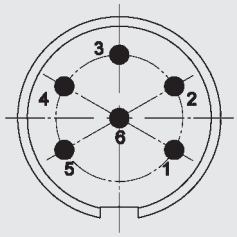

Pin	(each connector)
1	Signal
2	0 V (analogue output)
3	Set input start point
4	Set input end point
5	$+U_B$
6	0 V

Model code:

HLT 2 1 0 X – R1 – M06 – XXX – XXXX – 000

Design / geometry type
1 = rod

Output variants
2 = double redundancy
3 = triple redundancy

Model
R1 = rod with M18x1.5 screw-in flange

Electrical connection
M06 = male M16, 6 pole

Output signal
C01 = analogue 4 .. 20 mA, 3-conductor
E01 = analogue 0 .. 20 mA, 3-conductor

Measuring range in mm (50 .. 2000 mm in steps of 50 mm)
Example
0150 = 150 mm

Modification
000 = standard

Accessories available: (not supplied with instrument)

ZBL MR33	position magnet	part no.: 6084207
ZBL MR22	position magnet	part no.: 6084453
ZBL MR17.4	position magnet	part no.: 6119372

More detailed information on accessories as well as on further accessories, such as intermediate rings and mating connectors, can be found in the Accessories brochure.

Note:

The information in this brochure relates to the operating conditions and applications described.

For applications or operating conditions not described, please contact the relevant technical department.

Subject to technical modifications.

HYDAC ELECTRONIC GMBH
Hauptstraße 27, 66128 Saarbrücken
Germany
Telephone +49 (0)6897 509-01
Fax +49 (0)6897 509-1726
E-mail: electronic@hydac.com
Internet: www.hydac.com

Linear Position Transmitter HLT 1100-R2

Magnetostrictive | **For full integration** | **Resolution min. 0.1 mm**

Analogue
Increased Functional Safety

Functional Safety
PL d
SIL 2

Description:

This version of the linear position sensor HLT 1100 has been developed specifically for use in safety circuits / safety functions as part of the functional safety of machinery and equipment up to SIL 2 (IEC 61508) or PL d (ISO 13849).

The sensor works on the principle of magnetostriction. This measuring principle determines with high accuracy the position, distance and/or speed and is based on elapsed time measurement.

Based on this non-contact and wear-free measuring system, HYDAC offers this version in a pressure-resistant stainless steel housing For full integration in hydraulic cylinders.

Technical data:

Input data	
Measuring ranges	200 .. 2500 mm
Model	Rod Ø 10 mm for cylinder full integration [1] Operating pressure: ≤ 450 bar Peak pressure acc. to DIN EN ISO 19879: 630 bar
Material	Rod: Stainless steel 1.4571 Housing: Stainless steel 1.4301
Seal	O-ring: NBR Backup ring: PTFE
Output data	
Output signal, permitted load resistance	4 .. 20 mA, load resist.: 200 .. 500 Ω
Resolution	12 bit, min. 0.1 mm
Non-linearity	≤ ± 0.05 % FS
Hysteresis	≤ ± 0.1 % FS
Repeatability	≤ ± 0.1 % FS
Temperature coefficient	≤ ± 0.01 % FS / °C
Sampling rate	≤ 30 ms (10 .. 90 %)
Environmental conditions	
Operating temperature range	-40 .. +85 °C
Storage temperature range	-40 .. +100 °C
Fluid temperature range	-40 .. +120 °C
CE mark	EN 61000-6-1 / 2 / 3 / 4
Vibration resistance acc. to DIN EN 60068-2-6 at 5 .. 8.2 Hz at 8.2 .. 150 Hz	≤ 7.5 mm ≤ 2.0 g
Shock resistance acc. to DIN EN 60068-2-27 (11 ms)	≤ 20 g
Protection class acc. to DIN EN 60529	IP 67 (cable outlet) IP 6K9K [2] (separate male flange connector M12x1)
Installation position	No restrictions
Safety-related data	
Performance level	
Based on	DIN EN ISO 13849-1:2008
PL	d
Architecture	Category 2
Safety Integrity Level	
Based on	DIN EN 61508:2002
SIL	2
Other data	
Supply voltage	9 .. 36 V DC
Residual ripple of supply voltage	≤ 250 mV_{PP}
Current consumption without output	< 100 mA
Weight	Depending on length: 100 mm (with 1 m cable): ~310 g 2500 mm (with 1 m cable): ~1030 g

Note: Reverse polarity protection of the supply voltage, overvoltage and short circuit protection are provided.
FS (**F**ull **S**cale) = relative to complete measuring range

[1] Other variants available on request.
[2] With mounted mating connector in corresponding protection class

Dimensions:

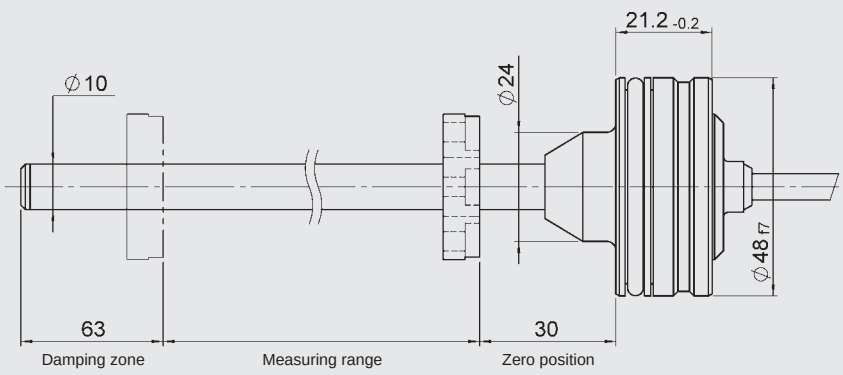

Model code:

HLT 1 1 0 0 – R2 – XXX – C01 – XXXX – S2PD – 000

Design / geometry type
1 = rod

Model
R2 = rod for cylinder full integration

Electrical connection
Cable output
K01 = jacketed cable, length 1 m
K02 = jacketed cable, length 2 m
K05 = jacketed cable, length 5 m
K10 = jacketed cable, length 10 m

Separate male flange connector M12x1, 4 pole
L06 = 60 mm lead length
L18 = 180 mm lead length
L24 = 240 mm lead length

Output signal
C01 = analogue 4 .. 20 mA, 3-conductor

Measuring range in mm (200 .. 2500 mm)
Example
0250 = 250 mm

Functional safety
S2PD = SIL 2 acc. to IEC 61508
and PLd – Cat 2 acc. to DIN EN 13849-1

Modification
000 = standard
003 = modified pin assignment
004 = modified pin assignment

Accessories available: (not supplied with instrument)

ZBL MR17.4	position magnet	part no.: 6119372
ZBL MR22	position magnet	part no.: 6084453
ZBL MR33	position magnet	part no.: 6084207

More detailed information on accessories as well as on further accessories, such as mating connectors, can be found in the Accessories brochure.

Pin connections:

Cable outlet

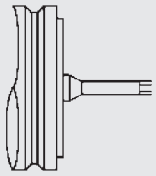

Lead	
brown	$+U_B$
white	0 V
green	Signal

M12x1, 4 pole

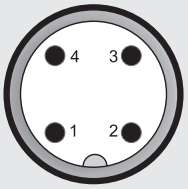

Pin	Mod. 000	Mod. 003	Mod. 004
1	$+U_B$	$+U_B$	n.c.
2	n.c.	Signal	$+U_B$
3	0 V	0 V	0 V
4	Signal	n.c.	Signal

Note:

The information in this brochure relates to the operating conditions and applications described.

For applications or operating conditions not described, please contact the relevant technical department.

Subject to technical modifications.

HYDAC ELECTRONIC GMBH
Hauptstraße 27, 66128 Saarbrücken
Germany
Telephone +49 (0)6897 509-01
Fax +49 (0)6897 509-1726
E-mail: electronic@hydac.com
Internet: www.hydac.com

Linear Position Transmitter HLT 1100-R2

Magnetostrictive | **For full integration** | **Resolution min. 0.1 mm**

CANopen safety easy to use

Functional Safety PL d SIL 2

CANopen Safety
Increased Functional Safety

Description:

This version of the linear position sensor HLT 1100 has been developed specifically for use in safety circuits / safety functions as part of the functional safety of machinery and equipment up to SIL 2 (IEC 61508) or PL d (ISO 13849).

The sensor works on the principle of magnetostriction.
This measuring principle determines with high accuracy the position, distance and/ or speed and is based on elapsed time measurement.

Based on this non-contact and wear-free measuring system, HYDAC offers this version in a pressure-resistant stainless steel housing For full integration in hydraulic cylinders.

In the CANopen version, the measured value is digitised and made available to the CAN field bus system via the CANopen protocol. The instrument parameters can be viewed and configured by the user via the CANopen object directory using standard CAN software.

Technical data:

Input data	
Measuring ranges	200 .. 2500 mm
Model	Rod Ø 10 mm for cylinder full integration [1] Operating pressure: ≤ 450 bar Peak pressure acc. to DIN EN ISO 19879: 630 bar
Material	Rod: Stainless steel 1.4571 Housing: Stainless steel 1.4301
Seal	O-ring: NBR Backup ring: PTFE
Output data	
Output signal	CANopen Safety
Resolution	0.1 mm
Non-linearity	≤ ± 0.02 % FS
Hysteresis	≤ ± 0.1 mm
Repeatability	≤ ± 0.1 mm
Temperature coefficient	≤ ± 0.003 % FS / °C
Sampling rate	≤ 10 ms (0 .. 100 %)
Environmental conditions	
Operating temperature range	-40 .. +85 °C
Storage temperature range	-40 .. +100 °C
Fluid temperature range	-40 .. +120 °C
CE mark	EN 61000-6-1 / 2 / 3 / 4
Vibration resistance acc. to DIN EN 60068-2-6 at 5 .. 8.2 Hz at 8.2 .. 150 Hz	≤ 7.5 mm ≤ 2.0 g
Shock resistance acc. to DIN EN 60068-2-27 (11 ms)	≤ 50 g
Protection class acc. to DIN EN 60529	IP 67 (cable outlet) IP 6K9K [2] (separate male flange connector M12x1)
Installation position	No restrictions
Protocol data for CANopen	
Communication profile	CiA DS 301 V4.2 / DS 304 V1.0.1
NMT-Services	CiA DSP 302 V4.1
Layer setting services and protocol	CiA DSP 305 V2.2
Encoder Device Profile	CiA DS 406 V3.2
Baud rates	10 kbit/s .. 1 Mbit/s acc. to DS305 V2.2
Transmission services - PDO - Transfer	 Measured value as 32 bit and float synchronous, asynchronous, cyclical
Node ID/baud rate	Adjustable via LSS
Safety-related data	
Performance level	
Based on	DIN EN ISO 13849-1:2008
PL	d
Architecture	Category 2
Safety Integrity Level	
Based on	DIN EN 61508:2002
SIL	2
Other data	
Supply voltage	9 .. 36 V DC
Residual ripple of supply voltage	≤ 250 mV_{PP}
Current consumption without output	< 100 mA
Weight	Depending on length: 100 mm (with 1 m cable): ~310 g 2500 mm (with 1 m cable): ~1030 g

Note: Reverse polarity protection of the supply voltage, overvoltage and short circuit protection are provided.
FS (**F**ull **S**cale) = relative to complete measuring range

[1] Other variants available on request.
[2] With mounted mating connector in corresponding protection class

Dimensions:

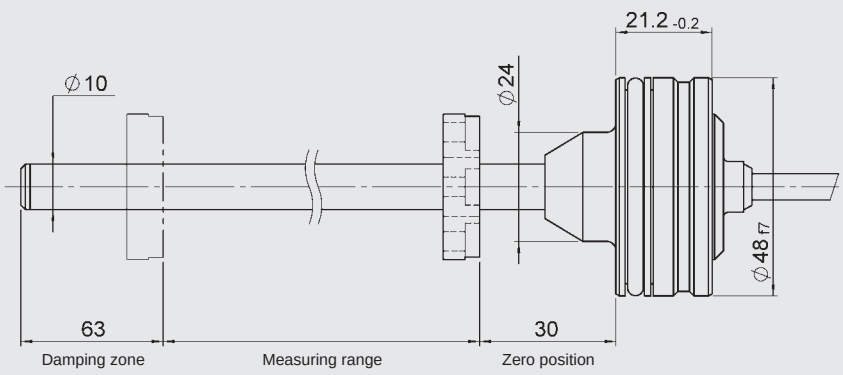

Model code:

HLT 1 1 0 0 – R2 – XXX – F13 – XXXX – S2PD – 000

Design / geometry type
1 = rod

Model
R2 = rod for cylinder full integration

Electrical connection
Cable output
K01 = jacketed cable, length 1 m
K02 = jacketed cable, length 2 m
K05 = jacketed cable, length 5 m
K10 = jacketed cable, length 10 m

Separate male flange connector M12x1, 5 pole
L06 = 60 mm lead length
L18 = 180 mm lead length
L24 = 240 mm lead length

Output signal
F13 = CANopen Safety

Measuring range in mm (200 .. 2500 mm)
Example
0250 = 250 mm

Functional safety
S2PD = SIL 2 acc. to IEC 61508
and PLd – Cat 2 acc. to DIN EN 13849-1

Modification
000 = standard

Accessories available: (not supplied with instrument)

ZBL MR17.4	position magnet	part no.: 6119372
ZBL MR22	position magnet	part no.: 6084453
ZBL MR33	position magnet	part no.: 6084207

More detailed information on accessories as well as on further accessories, such as mating connectors, can be found in the Accessories brochure.

Pin connections:

Cable outlet

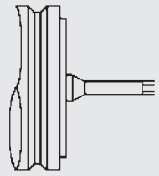

Lead	
brown	$+U_B$
white	0 V
green	CAN_L
yellow	CAN_H

M12x1, 5 pole

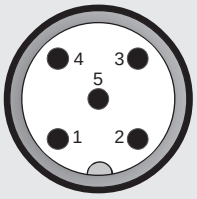

Pin	Signal	Description
1	n.c.	
2	$+U_B$	Supply+
3	0 V	Supply-
4	CAN_H	Bus line dominant high
5	CAN_L	Bus line dominant low

Note:

The information in this brochure relates to the operating conditions and applications described.

For applications or operating conditions not described, please contact the relevant technical department.

Subject to technical modifications.

HYDAC ELECTRONIC GMBH
Hauptstraße 27, 66128 Saarbrücken
Germany
Telephone +49 (0)6897 509-01
Fax +49 (0)6897 509-1726
E-mail: electronic@hydac.com
Internet: www.hydac.com

Linear Position Transmitter HLT 724 for series applications

Magnetic-inductive | **For full integration** | **Resolution 0.1 %**

Customised designs thanks to diverse electrical connections
Analogue

Description:

The the sensor's measuring principle for determination of position or distance is based on magnetic-inductive measurement.

Based on this non-contact and wear-free measuring system, HYDAC offers a version in a pressure-resistant housing For full integration in hydraulic cylinders.

The different output signals (analogue) enable connection to all HYDAC ELECTRONIC GmbH measurement and control devices as well as connection to standard evaluation systems (e.g. to PLC controls).

The main fields of application are in mobile hydraulics.

Technical data:

Input data		
Measuring ranges	50 .. 400 mm	
Model	Rod Ø 8 mm, sensor head Ø 24 mm [1] for cylinder full integration Operating pressure: ≤ 450 bar Peak pressure acc. to DIN EN ISO 19879: 630 bar	
Material	Rod: Stainless steel 1.4571 Housing: Stainless steel 1.4057	
Seal	O-ring: PU P5008	
Output data		
Output signal, permitted load resistance	Current:	4 .. 20 mA, 3-conductor 20 .. 4 mA, 3-conductor Load resist.: 200 .. 500 Ω
	Voltage:	0.25 .. 4.75 V, 4.75 .. 0.25 V 0.5 .. 4.5 V, 4.5 .. 0.5 V Load resist.: min. 2 kΩ
Resolution	0.1 % FS	
Non-linearity	≤ ± 1 % FS	
Hysteresis	≤ ± 0.25 % FS	
Repeatability	≤ ± 0.125 % FS	
Sampling rate	≤ 20 ms (10 .. 90 %)	
Environmental conditions		
Operating temperature range	-40 .. +85 °C	
Storage temperature range	-55 .. +105 °C	
Fluid temperature range	-40 .. +120 °C	
CE mark	EN 61000-6-1 / 2 / 3 / 4	
Vibration resistance acc. to DIN EN 60068-2-6 at 10 .. 90 Hz at 91 .. 2000 Hz	≤ 1.5 mm ≤ 17 g	
Shock resistance acc. to DIN EN 60068-2-27 (11 ms)	≤ 50 g	
Protection class acc. to DIN EN 60529	IP 67 (single leads) IP 6K9K (separate male flange connector M12x1; separate male connector Molex in conjunction with ZBE 50 (accessory male flange connector DT04-3p Molex))	
Installation position	No restrictions	
Other data		
Electrical connection	Single leads 3 x 0.25 mm² Separate male flange connector M12x1, 4 pole Separate male connector Molex, 3 pole	
Supply voltage (Vin) nominal	9 .. 32 V DC	
Residual ripple of supply voltage	≤ 5 %	
Power consumption without output	≤ 320 mW	
Weight	(dependent on measuring range and lead lengths) 50 mm: ~50 g 400 mm: ~130 g	

Note: Reverse polarity protection of the supply voltage, overvoltage and short circuit protection are provided.
FS (**F**ull **S**cale) = relative to complete measuring range

[1] Further head diameters available on request.

Dimensions:

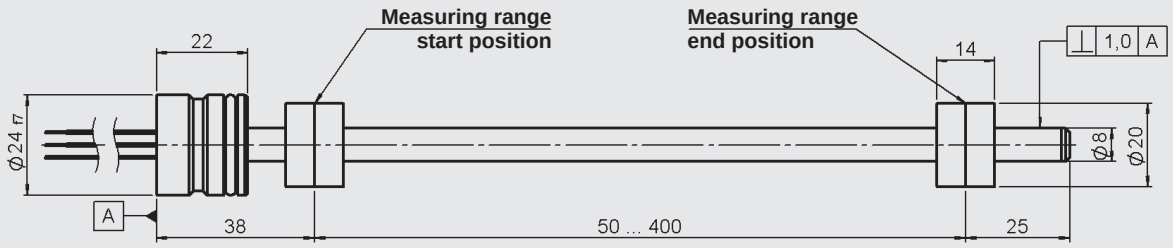

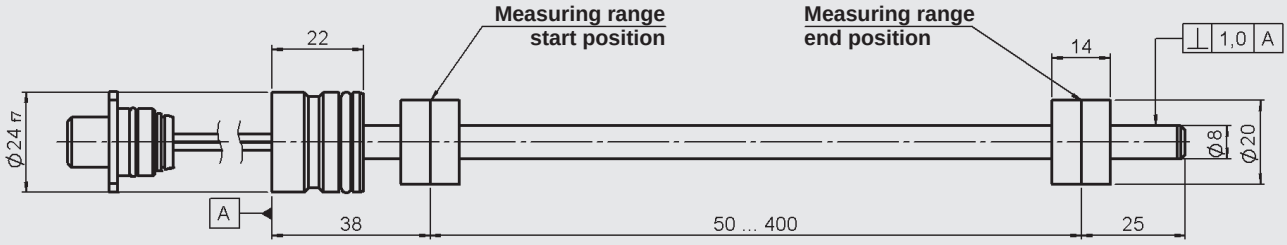

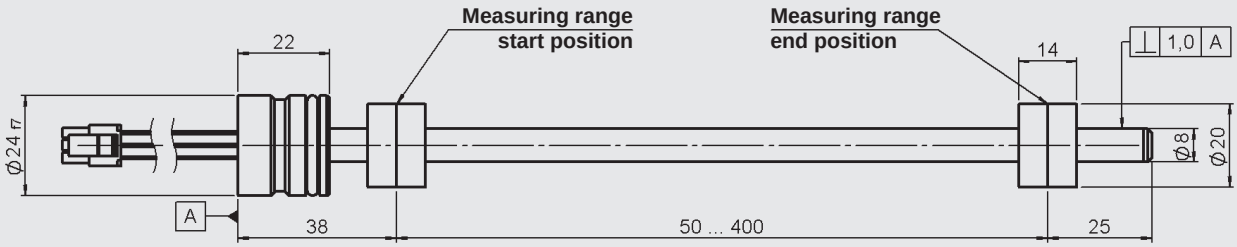

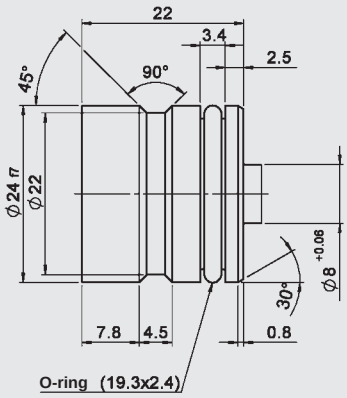

Order details:

The linear position transmitter HLT 724 has been specially developed for OEM customers and is available for minimum order quantities of 500 units per type.

For precise specifications, please contact the Sales Department of HYDAC ELECTRONIC.

Note:

The information in this brochure relates to the operating conditions and applications described.

For applications or operating conditions not described, please contact the relevant technical department.

Subject to technical modifications.

HYDAC ELECTRONIC GMBH
Hauptstr. 27, 66128 Saarbrücken
Germany
Telephone +49 (0)6897 509-01
Fax +49 (0)6897 509-1726
e-mail: electronic@hydac.com
Internet: www.hydac.com

Linear Position Transmitter HLT 2500-L2

Magnetostrictive | **For external mount** | **Resolution 5 µm**

Analogue

Description:

The sensor works on the principle of magnetostriction.

This measuring principle determines with high accuracy the position, distance and/ or speed and is based on elapsed time measurement.

Utilising this non-contact and wear-free measuring system, HYDAC offers a version in an aluminium profile housing with external measuring slides or with a sliding magnet for positioning by the operator.

The different output signals (analogue current / voltage) enable connection to all HYDAC ELECTRONIC GmbH measurement and control devices as well as standard evaluation systems (e.g. PLC controls)

External set inputs for the analogue start point and end point offer an additional possibility of a customised adjustment.

The HLT 2500-L2 is primarily used in stationary applications, especially when a partially integrated solution in hydraulic cylinders is not possible.

Technical data:

Input data		
Measuring ranges	50 .. 4000 mm	
Model	Profile, with top magnet guidance joint	
Housing	Measuring body: Aluminium	
Output data		
Output signal, permitted load resistance	Current:	4 .. 20 mA or 20 .. 4 mA Load resist. 200 .. 500 Ω
	Voltage:	0 .. 10 V or 10 .. 0 V Load resist.: min. 2 kΩ
Resolution	16 bit; ≥ 0.005 mm	
Non-linearity	± 0.1 mm ± 0.15 mm	(measuring range ≤ 1500 mm) (measuring range > 1500 mm)
Hysteresis	0.02 mm 0.1 mm	(measuring range ≤ 1500 mm) (measuring range > 1500 mm)
Repeatability	≤ 0.005 mm - ≤ 0.05 mm (depends on length)	
Temperature coefficient	≤ ± 0.004 % FS / °C	
Sampling rate	Depending on length: ≤ 1 m: 0.5 ms ≤ 2 m: 1.0 ms > 2 m: 1.5 ms	
Environmental conditions		
Operating temperature range	0 .. +70 °C; optionally -20 .. +70 °C	
Storage temperature range	-30 .. +85 °C	
CE mark	EN 61000-6-1 / 2 / 3 / 4	
Vibration resistance acc. to DIN EN 60068-2-6 at 50 .. 2000 Hz	≤ 10 g	
Shock resistance acc. to DIN EN 60068-2-27 (11 ms / half sine)	≤ 100 g	
Protection class acc. to DIN EN 60529 [1]	IP 65	
Installation position	No restrictions	
Other data		
Supply voltage	24 V DC ± 10 %	
Residual ripple of supply voltage	≤ 250 mV_{PP}	
Current consumption without output	< 100 mA	
Weight	Depending on length: 50 mm: 450 g 4000 mm: 4050 g	

Note: Reverse polarity protection of the supply voltage, overvoltage and short circuit protection are provided.
FS (**F**ull **S**cale) = relative to complete measuring range

[1] With mounted mating connector in corresponding protection class

Dimensions:

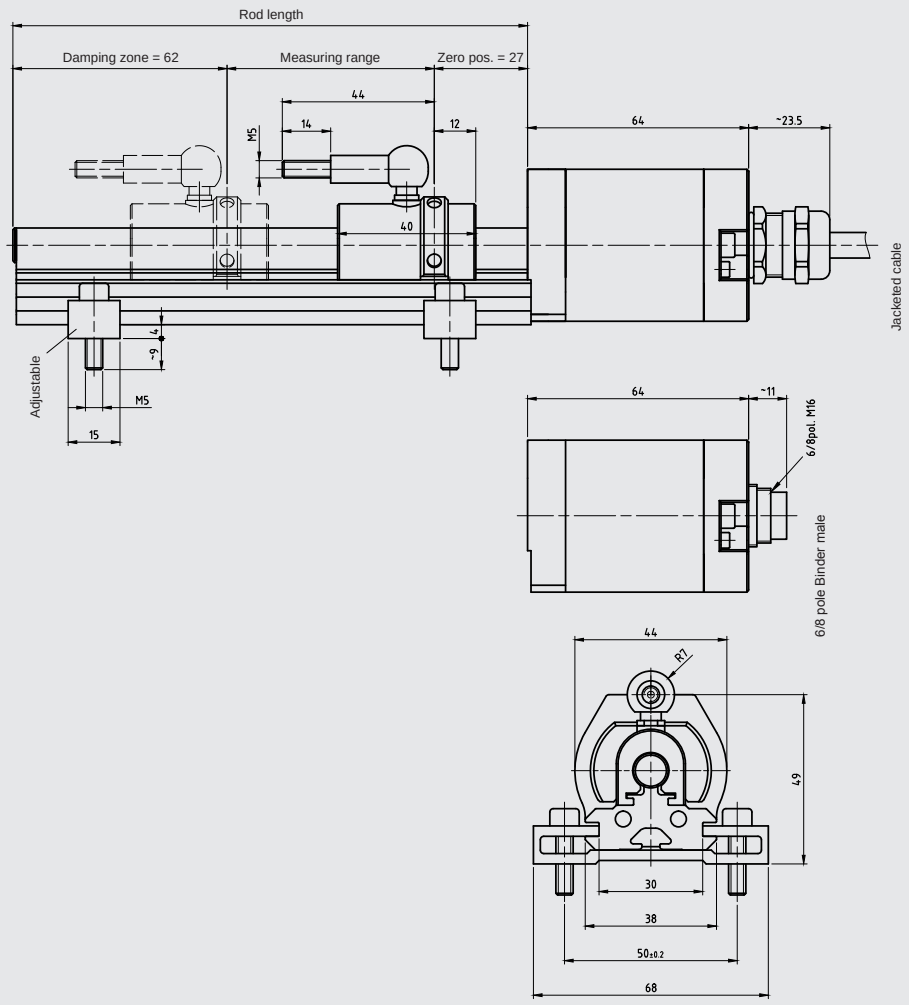

Pin connections:

Male M16, 6 pole

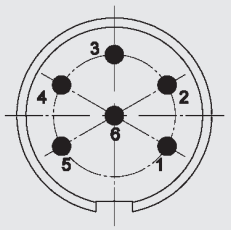

Pin	
1	Signal
2	0 V (analogue output)
3	Start point
4	End point
5	0 V
6	$+U_B$

Male M16, 8 pole

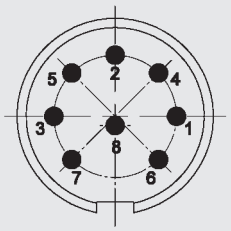

Pin	
1	n.c.
2	0 V (analogue output)
3	Start point
4	End point
5	Signal
6	0 V
7	$+U_B$
8	n.c.

Cable outlet

Lead	
brown	0 V (analogue output)
green	Start point
yellow	End point
grey	Signal
pink	0 V
blue	$+U_B$

Model code:

HLT 2 5 0 0 – L2 – XXX – XXX – XXXX – 000

Design / geometry type
5 = profile

Model
L2 = profile, with top magnet guidance joint

Electrical connection
K01 = jacketed cable, length 1 m
M06 = male M16, 6 pole
M08 = male M16, 8 pole

Output signal
C01 = analogue 4 .. 20 mA, 3-conductor
C02 = analogue 20 .. 4 mA, 3-conductor
B01 = analogue 0 .. 10 V
B02 = analogue 10 .. 0 V

Measuring range in mm (50 .. 4000 mm)
Example
0150 = 150 mm

Modification
000 = standard

Accessories: (supplied with instrument)

ZBL MS35-39	magnet slide	part no.: 6105654

Accessories: (not supplied with instrument)

ZBL MV63	position magnet	part no.: 6084454
ZBL MU38-20	position magnet	part no.: 6084455
ZBL mounting kit		part no.: 6105653

More detailed information on accessories as well as on further accessories, such as mating connectors, can be found in the Accessories brochure.

Note:

The information in this brochure relates to the operating conditions and applications described.

For applications or operating conditions not described, please contact the relevant technical department.

Subject to technical modifications.

HYDAC ELECTRONIC GMBH
Hauptstraße 27, 66128 Saarbrücken
Germany
Telephone +49 (0)6897 509-01
Fax +49 (0)6897 509-1726
E-mail: electronic@hydac.com
Internet: www.hydac.com

Linear Position Transmitter HLT 2500-L2

Magnetostrictive | **For external mount** | **Resolution 1 µm**

CANopen

Description:

The sensor works on the principle of magnetostriction.

This measuring principle determines with high accuracy the position, distance and/ or speed and is based on elapsed time measurement.

Utilising this non-contact and wear-free measuring system, HYDAC offers a version in an aluminium profile housing with external measuring slide or with a sliding magnet for positioning by the operator.

In the CANopen version, the measured value is digitised and made available to the CAN field bus system via the CANopen protocol. The instrument parameters can be viewed and configured by the user via the CANopen object directory using standard CAN software.

The HLT 2500-L2 is primarily used in stationary applications, especially when a partially integrated solution in hydraulic cylinders is not possible.

Technical data:

Input data	
Measuring ranges	50 .. 4000 mm
Model	Profile, with top magnet guidance joint
Housing	Measuring body: Aluminium
Output data	
Output signal	CANopen
Resolution	0.001 mm
Non-linearity	± 0.1 mm (measuring range ≤ 1500 mm) ± 0.15 mm (measuring range > 1500 mm)
Hysteresis	0.02 mm (measuring range ≤ 1500 mm) 0.1 mm (measuring range > 1500 mm)
Repeatability	≤ 0.005 mm - ≤ 0.05 mm (depends on length)
Temperature coefficient	≤ ± 0.0015 % FS / °C
Sampling rate	Depending on length: ≤ 1.0 m: 1.0 ms ≤ 1.5 m: 1.5 ms ≤ 2.0 m: 2.0 ms ≤ 2.5 m: 2.5 ms > 2.5 m: 3.0 ms
Environmental conditions	
Operating temperature range	0 .. +70 °C; optionally -20 .. +70 °C
Storage temperature range	-30 .. +85 °C
CE mark	EN 61000-6-1 / 2 / 3 / 4
Vibration resistance acc. to DIN EN 60068-2-6 at 50 .. 2000 Hz	≤ 10 g
Shock resistance acc. to DIN EN 60068-2-27 (11 ms / half sine)	≤ 100 g
Protection class acc. to DIN EN 60529 [1]	IP 65
Installation position	No restrictions
Protocol data for CANopen	
CANopen	EN 50325-4
Bus connection	ISO 11898-1, ISO 11898-2
CAN Specification 2.0 A	11-bit identifier
Device profile for encoder	CiA DS406
Layer Setting Services, LSS	CiA DS305
Layer Management Services, LMT	CiA DS205-1, DS205-2
Transmission rate parameter	10, 20, 50, 100, 125, 250, 500, 800, 1000 kbit/s Default: 500 kbit/s
Adjustability	via DIP switch via LS service, LMT service
Other data	
Supply voltage	24 V DC -20 .. +10 %
Residual ripple of supply voltage	≤ 250 mV_{PP}
Current consumption without output	< 150 mA
Weight	Depending on length: 50 mm: 450 g 4000 mm: 4150 g

Note: Reverse polarity protection of the supply voltage, overvoltage and short circuit protection are provided.
FS (**F**ull **S**cale) = relative to complete measuring range

[1] With mounted mating connector in corresponding protection class

Dimensions:

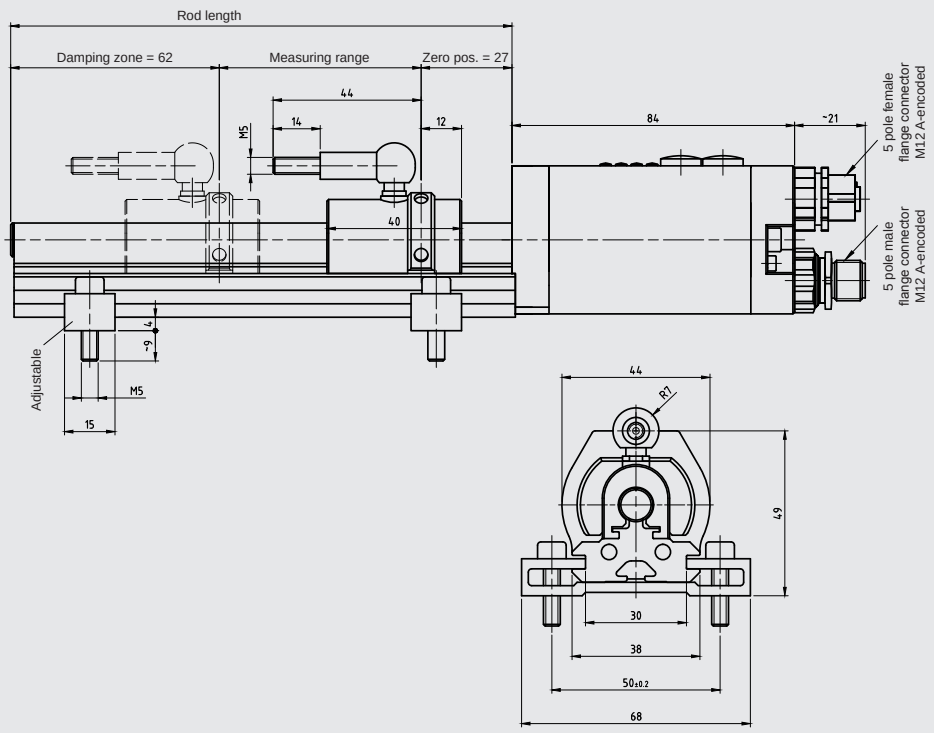

Model code:

HLT 2 5 0 0 – L2 – C61 – F11 – XXXX – 000

Design / geometry type
5 = profile

Model
L2 = profile, with top magnet guidance joint

Electrical connection
C61 = female M12x1, 5 pole + male M12x1, 5 pole

Output signal
F11 = CANopen

Measuring range in mm (50 .. 4000 mm)
Example
0150 = 150 mm

Modification
000 = standard

Accessories: (supplied with instrument)

ZBL MS35-39	magnet slide	part no.: 6105654

Accessories: (not supplied with instrument)

ZBL MV63	position magnet	part no.: 6084454
ZBL MU38-20	position magnet	part no.: 6084455
ZBL mounting kit		part no.: 6105653

More detailed information on accessories as well as on further accessories, such as mating connectors, can be found in the Accessories brochure.

Pin connections:

Female M12x1, 5 pole, A-encoded

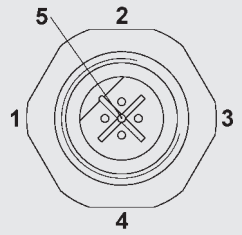

Pin	CANopen_OUT	
1	Housing	Shield/housing
2	$+U_B$	Supply +
3	0 V	Supply -
4	CAN_H	Bus line dominant high
5	CAN_L	Bus line dominant low

Male M12x1, 5 pole, A-encoded

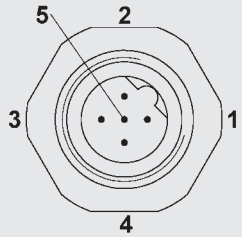

Pin	CANopen_IN	
1	Housing	Shield/housing
2	$+U_B$	Supply +
3	0 V	Supply -
4	CAN_H	Bus line dominant high
5	CAN_L	Bus line dominant low

Note:

The information in this brochure relates to the operating conditions and applications described.

For applications or operating conditions not described, please contact the relevant technical department.

Subject to technical modifications.

HYDAC ELECTRONIC GMBH
Hauptstraße 27, 66128 Saarbrücken
Germany
Telephone +49 (0)6897 509-01
Fax +49 (0)6897 509-1726
E-mail: electronic@hydac.com
Internet: www.hydac.com

Linear Position Transmitter HLT 2500-L2

Magnetostrictive | **For external mount** | **Resolution 1 µm**

Profibus

Description:

The sensor works on the principle of magnetostriction.

This measuring principle determines with high accuracy the position, distance and/ or speed and is based on elapsed time measurement.

Utilising this non-contact and wear-free measuring system, HYDAC offers a version in an aluminium profile housing with external measuring slide or with a sliding magnet for positioning by the operator.

In the Profibus version, the measured value is digitised and made available to the field bus system via the Profibus protocol.

The HLT 2500-L2 is primarily used in stationary applications, especially when a partially integrated solution in hydraulic cylinders is not possible.

Technical data:

Input data		
Measuring ranges	50 .. 4000 mm	
Model	Profile, with top magnet guidance joint	
Housing	Measuring body: Aluminium	
Output data		
Output signal	Profibus	
Resolution	0.001 mm	
Non-linearity	± 0.1 mm ± 0.15 mm	(measuring range ≤ 1500 mm) (measuring range > 1500 mm)
Hysteresis	0.02 mm 0.1 mm	(measuring range ≤ 1500 mm) (measuring range > 1500 mm)
Repeatability	≤ 0.005 mm - ≤ 0.05 mm (depends on length)	
Temperature coefficient	≤ ± 0.0015 % FS / °C	
Sampling rate	Depending on length: ≤ 1.0 m: 1.0 ms ≤ 1.5 m: 1.5 ms ≤ 2.0 m: 2.0 ms ≤ 2.5 m: 2.5 ms > 2.5 m: 3.0 ms	
Environmental conditions		
Operating temperature range	0 .. +70 °C; optionally -20 .. +70 °C	
Storage temperature range	-30 .. +85 °C	
CE mark	EN 61000-6-1 / 2 / 3 / 4	
Vibration resistance acc. to DIN EN 60068-2-6 at 50 .. 2000 Hz	≤ 10 g	
Shock resistance acc. to DIN EN 60068-2-27 (11 ms / half sine)	≤ 100 g	
Protection class acc. to DIN EN 60529 [1]	IP 65	
Installation position	No restrictions	
Protocol data for Profibus		
Profibus DP V0	IEC 61158, IEC 61784	
PNO encoder profile	Class 1 and 2	
Transmission rate parameter	9.6 .. 12000 kbit/s	
Other data		
Supply voltage	24 V DC -20 .. +10 %	
Residual ripple of supply voltage	≤ 250 mV_{PP}	
Current consumption without output	< 150 mA	
Weight	Depending on length: 50 mm: 450 g 4000 mm: 4150 g	

Note: Reverse polarity protection of the supply voltage, overvoltage and short circuit protection are provided.
FS (**F**ull **S**cale) = relative to complete measuring range

[1] With mounted mating connector in corresponding protection class

Dimensions:

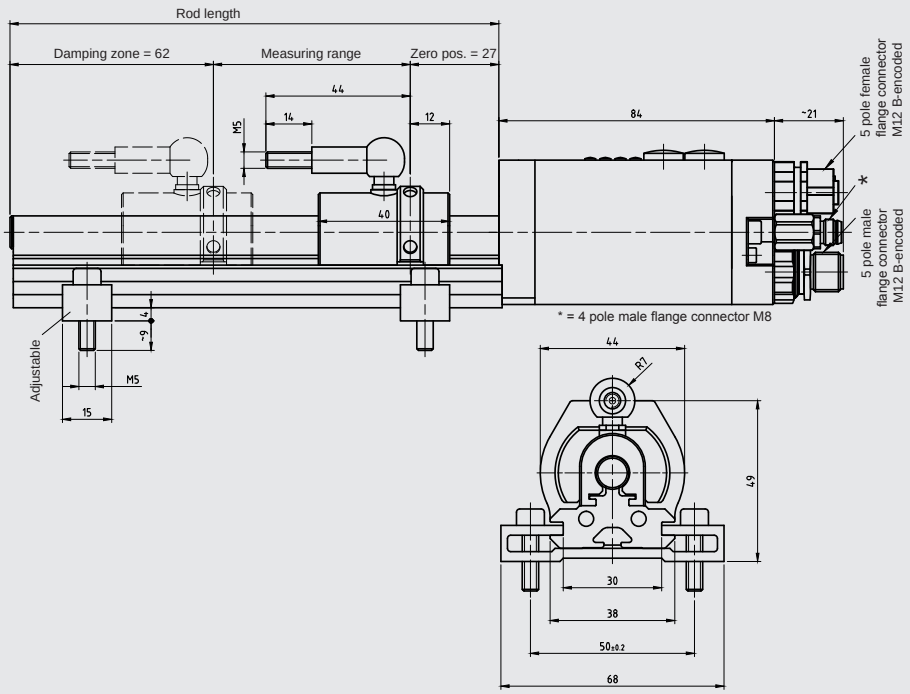

Model code:

HLT 2 5 0 0 – L2 – P61 – F41 – XXXX – 000

Design / geometry type
5 = profile

Model
L2 = profile, with top magnet guidance joint

Electrical connection
P61 = female M12x1, 5 pole + male M12x1, 5 pole
+ male M8, 4 pole

Output signal
F41 = Profibus

Measuring range in mm (50 .. 4000 mm)
Example
0150 = 150 mm

Modification
000 = standard

Accessories: (supplied with instrument)

ZBL MS35-39	magnet slide	part no.: 6105654

Accessories: (not supplied with instrument)

ZBL MV63	position magnet	part no.: 6084454
ZBL MU38-20	position magnet	part no.: 6084455
ZBL mounting kit		part no.: 6105653

More detailed information on accessories as well as on further accessories, such as mating connectors, can be found in the Accessories brochure.

Pin connections:

Female M12x1, 5 pole, B-encoded

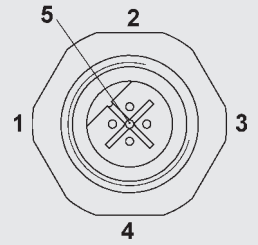

Pin	Profibus_OUT
1	VP, +5 V DC
2	Profibus, Data A
3	0 V
4	Profibus, Data B
5	n.c.
screw connection	Shield/housing

Male M12x1, 5 pole, B-encoded

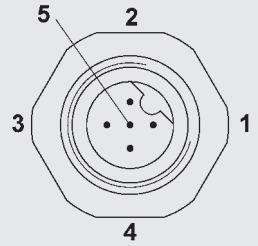

Pin	Profibus_IN
1	n.c.
2	Profibus, Data A
3	n.c.
4	Profibus, Data B
5	n.c.
screw connection	Shield/housing

Male M8x1, 4 pole

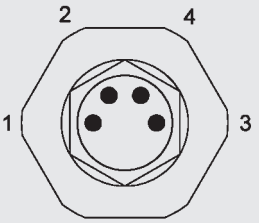

Pin	Profibus_IN
1	$+U_B$
2	n.c.
3	0 V
4	n.c.

Note:

The information in this brochure relates to the operating conditions and applications described.

For applications or operating conditions not described, please contact the relevant technical department.

Subject to technical modifications.

HYDAC ELECTRONIC GMBH
Hauptstraße 27, 66128 Saarbrücken
Germany
Telephone +49 (0)6897 509-01
Fax +49 (0)6897 509-1726
E-mail: electronic@hydac.com
Internet: www.hydac.com

Linear Position Transmitter HLT 2500-L2

Magnetostrictive | **For external mount** | **Resolution 1 µm**

Synchronous serial interface

Description:

The sensor works on the principle of magnetostriction.

This measuring principle determines with high accuracy the position, distance and/ or speed and is based on elapsed time measurement.

Utilising this non-contact and wear-free measuring system, HYDAC offers a version in an aluminium profile housing with external measuring slide or with a sliding magnet for positioning by the operator.

In the version with synchronous serial interface, the measured value is made available via synchronous and symmetrical clock and data signals.

The HLT 2500-L2 is primarily used in stationary applications, especially when a partially integrated solution in hydraulic cylinders is not possible.

Technical data:

Input data		
Measuring ranges	50 .. 4000 mm	
Model	Profile, with top magnet guidance joint	
Housing	Measuring body: Aluminium	
Output data		
Output signal	SSI	
Resolution	0.001 mm	
Non-linearity	± 0.1 mm ± 0.15 mm	(measuring range ≤ 1500 mm) (measuring range > 1500 mm)
Hysteresis	0.02 mm 0.1 mm	(measuring range ≤ 1500 mm) (measuring range > 1500 mm)
Repeatability	≤ 0.005 mm - ≤ 0.05 mm (depends on length)	
Temperature coefficient	≤ ± 0.0015 % FS / °C	
Sampling rate	Depending on length: ≤ 1.0 m: 0.50 ms ≤ 1.5 m: 0.75 ms ≤ 2.0 m: 1.00 ms > 2.0 m: 2.00 ms	
Environmental conditions		
Operating temperature range	0 .. +70 °C; optionally -20 .. +70 °C	
Storage temperature range	-30 .. +85 °C	
CE mark	EN 61000-6-1 / 2 / 3 / 4	
Vibration resistance acc. to DIN EN 60068-2-6 at 50 .. 2000 Hz	≤ 10 g	
Shock resistance acc. to DIN EN 60068-2-27 (11 ms / half sine)	≤ 100 g	
Protection class acc. to DIN EN 60529 [1)]	IP 65	
Installation position	No restrictions	
Relevant data for SSI		
SSI clock input	Optocoupler	
SSI data output	RS-422, 2-wire	
SSI clock frequency	95 .. 1000 kHz	
SSI monotime, typical	20 µs	
Other data		
Supply voltage	24 V DC -20 .. + 10 %	
Residual ripple of supply voltage	≤ 250 mV_{PP}	
Current consumption without output	< 250 mA	
Weight	Depending on length: 50 mm: 450 g 4000 mm: 4150 g	

Note: Reverse polarity protection of the supply voltage, overvoltage and short circuit protection are provided.
FS (**F**ull **S**cale) = relative to complete measuring range

[1)] With mounted mating connector in corresponding protection class

Dimensions:

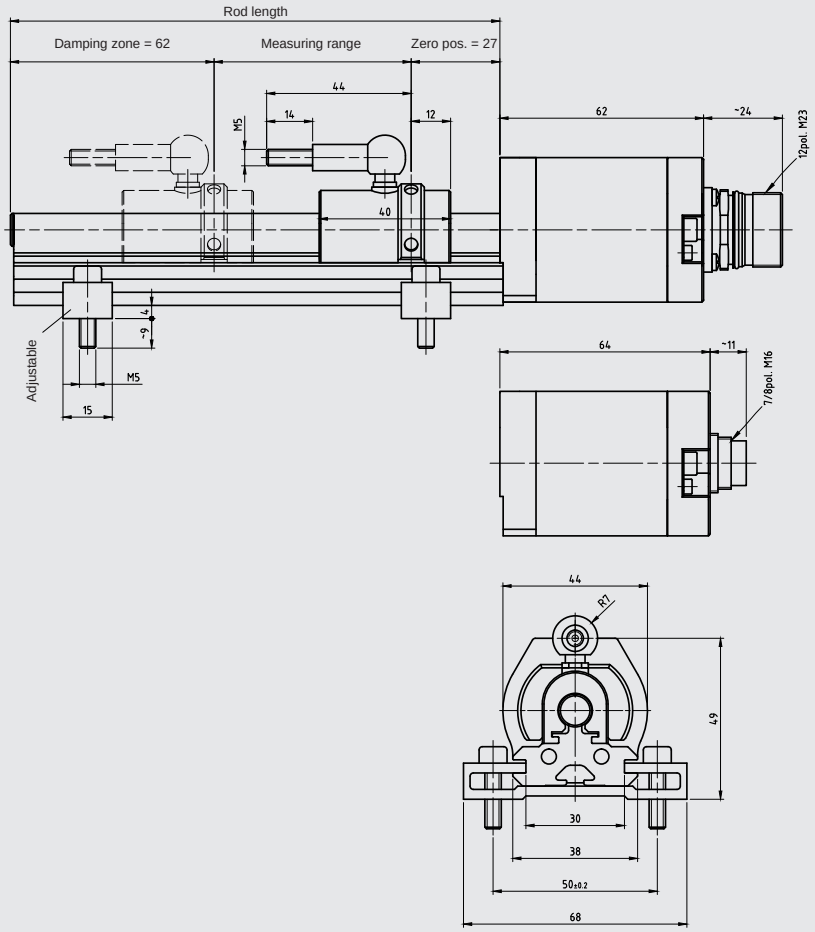

Model code:

HLT 2 5 0 0 - L2 - XXX - S16 - XXXX - XXX - XXX - 000

Design / geometry type
5 = profile

Model
L2 = profile,
with top magnet guidance joint

Electrical connection
S00 = CONTACT male, 12 pole
M07 = male M16, 7 pole
M08 = male M16, 8 pole

Output signal
S16 = SSI

Measuring range in mm (50 .. 4000 mm)
Example
0150 = 150 mm

Code
B24 = binary code 24 bit
B25 = binary code 25 bit
G24 = Gray code 24 bit
G25 = Gray code 25 bit

System resolution
001 = 1 µm
002 = 2 µm
005 = 5 µm
010 = 10 µm
100 = 100 µm

Modification
000 = standard

Accessories: (supplied with instrument)

ZBL MS35-39	magnet slide	part no.: 6105654

Accessories: (not supplied with instrument)

ZBL MV63	position magnet	part no.: 6084454
ZBL MU38-20	position magnet	part no.: 6084455
ZBL mounting kit		part no.: 6105653

More detailed information on accessories as well as on further accessories, such as mating connectors, can be found in the Accessories brochure.

Pin connections:

CONTACT male, 12 pole

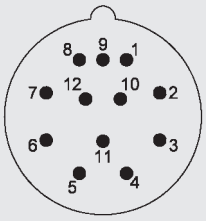

Pin	
1	SSI_Clock-_IN
2	SSI_Clock+_IN
3	SSI_DATA+_OUT
4	SSI_DATA-_OUT
5	RS 485 +_IN/OUT
6	RS 485 -_IN/OUT
7	n.c.
8	Direction IN
9	Preset1_IN
10	n.c.
11	$+U_B$_ IN
12	0 V _IN

Male M16x1, 7 pole

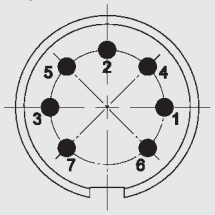

Pin	Signal	Description
1	SSI_DATA-_OUT	Data output -
2	SSI_DATA+_OUT	Data output +
3	SSI_Clock+_IN	Clock input +
4	SSI_Clock-_IN	Clock input -
5	Supply Voltage IN	Supply voltage
6	Ground IN	Ground
7	not connected	

Male M16x1, 8 pole

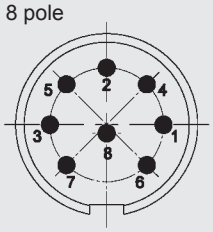

Pin	Signal	Description
1	SSI_Clock+_IN	Clock input +
2	SSI_DATA+_OUT	Data output +
3	SSI_Clock-_IN	Clock input -
4	Ser.Program+_IN/OUT	Ser. programming interface RS485
5	SSI_DATA-_OUT	Data output -
6	Ground IN	Ground
7	Supply Voltage IN	Supply voltage
8	Ser.Program-_IN/OUT	Ser. programming interface RS485

Note:

The information in this brochure relates to the operating conditions and applications described. For applications or operating conditions not described, please contact the relevant technical department.
Subject to technical modifications.

HYDAC ELECTRONIC GMBH
Hauptstr. 27, 66128 Saarbrücken / Germany
Telephone +49 (0)6897 509-01
Fax +49 (0)6897 509-1726
e-mail: electronic@hydac.com
Internet: www.hydac.com

Linear Position Transmitter HLT 2500-L2

Magnetostrictive | **For external mount** | **Resolution 1 µm**

EtherCAT

Description:

The sensor works on the principle of magnetostriction.

This measuring principle determines with high accuracy the position, distance and/ or speed and is based on elapsed time measurement.

Utilising this non-contact and wear-free measuring system, HYDAC offers a version in an aluminium profile housing with external measuring slide or with a sliding magnet for positioning by the operator.

In the EtherCAT version, the measured value is digitised and made available to the field bus system via the EtherCAT protocol.

The HLT 2500-L2 is primarily used in stationary applications, especially when a partially integrated solution in hydraulic cylinders is not possible.

Technical data:

Input data	
Measuring ranges	50 .. 4000 mm
Model	Profile, with top magnet guidance joint
Housing	Measuring body: Aluminium
Output data	
Output signal	EtherCAT
Resolution	0.001 mm
Non-linearity	± 0.1 mm (measuring range ≤ 1500 mm) ± 0.15 mm (measuring range > 1500 mm)
Hysteresis	0.02 mm (measuring range ≤ 1500 mm) 0.1 mm (measuring range > 1500 mm)
Repeatability	≤ 0.005 mm - ≤ 0.05 mm (depends on length)
Temperature coefficient	≤ ± 0.0015 % FS / °C
Sampling rate	Depending on length: ≤ 0.5 m: 0.5 ms ≤ 1.0 m: 1.0 ms ≤ 2.0 m: 1.5 ms > 2.0 m: 2.0 ms
Environmental conditions	
Operating temperature range	0 .. +70 °C; optionally -20 .. +70 °C
Storage temperature range	-30 .. +85 °C
CE mark	EN 61000-6-1 / 2 / 3 / 4
Vibration resistance acc. to DIN EN 60068-2-6 at 50 .. 2000 Hz	≤ 10 g
Shock resistance acc. to DIN EN 60068-2-27 (11 ms / half sine)	≤ 100 g
Protection class acc. to DIN EN 60529 [1)]	IP 65
Installation position	No restrictions
Protocol data for EtherCAT	
EtherCAT	IEC 61158-1-6, IEC 61784-2
Physical Layer	Fast Ethernet, ISO/IEC 8802-3
Device profile	CoE, CiA DS-406
Transmission rate parameter	100 Mbit/s
Cycle time	100 .. 20000 µs
Other data	
Supply voltage	24 V DC -20 .. +10 %
Residual ripple of supply voltage	≤ 250 mV_{PP}
Current consumption without output	< 300 mA
Weight	Depending on length: 50 mm: 450 g 4000 mm: 4150 g

Note: Reverse polarity protection of the supply voltage, overvoltage and short circuit protection are provided.
FS (**F**ull **S**cale) = relative to complete measuring range

[1)] With mounted mating connector in corresponding protection class

Dimensions:

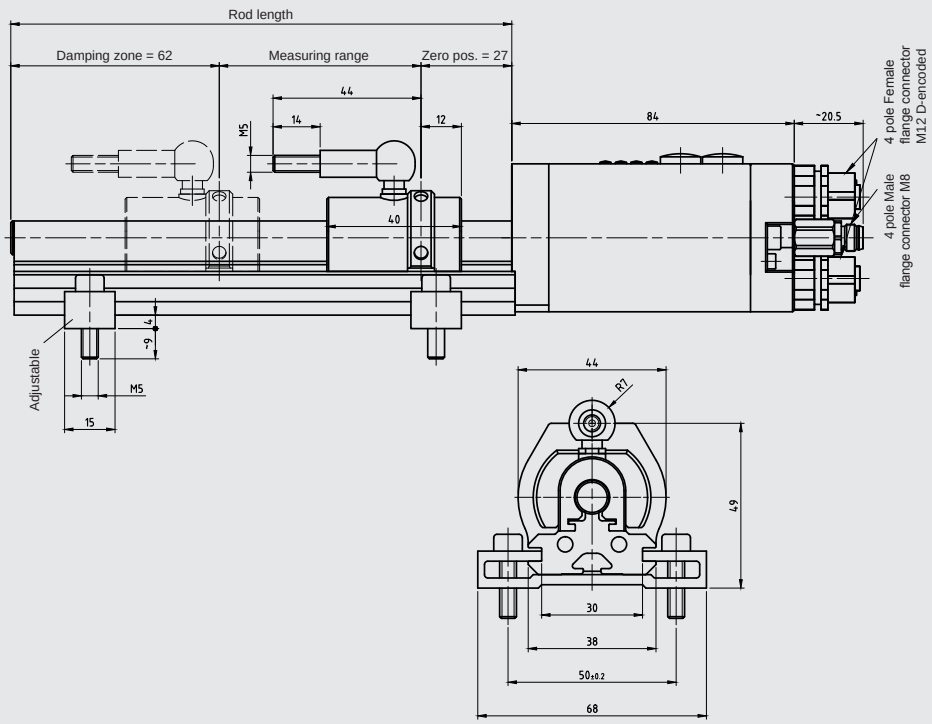

Model code:

HLT 2 5 0 0 – L2 – E51 – F51 – XXXX – 000

Design / geometry type
5 = profile

Model
L2 = profile, with top magnet guidance joint

Electrical connection
E51 = 2 female M12x1, 4 pole + male M8, 4 pole

Output signal
F51 = EtherCAT

Measuring range in mm (50 .. 4000 mm)
Example
0150 = 150 mm

Modification
000 = standard

Accessories: (supplied with instrument)

ZBL MS35-39	magnet slide	part no.: 6105654

Accessories: (not supplied with instrument)

ZBL MV63	position magnet	part no.: 6084454
ZBL MU38-20	position magnet	part no.: 6084455
ZBL mounting kit		part no.: 6105653

More detailed information on accessories as well as on further accessories, such as mating connectors, can be found in the Accessories brochure.

Pin connections:

Female M12x1, 4 pole, D-encoded

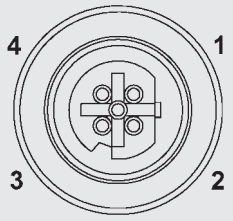

Pin	Port IN / Port OUT
1	Transmission data +
2	Receive data +
3	Transmission data -
4	Receive data -

Male M8x1, 4 pole

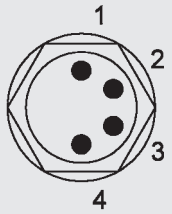

Pin	
1	$+U_B$
2	n.c.
3	0 V
4	n.c.

Note:

The information in this brochure relates to the operating conditions and applications described.

For applications or operating conditions not described, please contact the relevant technical department.

Subject to technical modifications.

HYDAC ELECTRONIC GMBH
Hauptstr. 27, 66128 Saarbrücken
Germany
Telephone +49 (0)6897 509-01
Fax +49 (0)6897 509-1726
e-mail: electronic@hydac.com
Internet: www.hydac.com

Linear Position Transmitter HLT 2550-L2

Magnetostrictive | **For external mount** | **Resolution 0.05 mm**

Analogue

Description:

The HLT 2550 is a linear position transmitter which, due to its compact design, was developed in particular for use in applications where space is very limited. The measuring profile can be individually adapted to various mounting conditions by means of spacers.

The HLT 2550 is suited for measuring ranges up to 3 m.
The different output signals (analogue current / voltage) enable connection to all HYDAC ELECTRONIC GmbH measurement and control devices as well as connection to standard evaluation systems (e.g. to PLC controls).

The main fields of application for the HLT 2550 are, for example, general positioning tasks in mechanical engineering and in stationary hydraulics, or as a wear-free alternative for existing measuring equipment such as potentiometers.

Technical data:

Input data		
Measuring ranges [1]	30 .. 3000 mm in steps of 50 mm	
Model	Profile, with top magnet guidance joint	
Material	Measuring body: Aluminium	
Output data		
Output signal, permitted load resistance	Current:	4 .. 20 mA or 20 .. 4 mA Load resist.: 200 .. 500 Ω
	Voltage:	0 .. 10 V or 10 .. 0 V Load resist.: min. 2 kΩ
Resolution	12 bit, ≥ 0.05 mm	
Non-linearity	≤ ± 0.01 % FS, ≥ 0.06 mm	
Hysteresis	≤ ± 0.1 mm	
Repeatability	≤ ± 0.005 % FS, ≥ 0.05 mm	
Temperature coefficient	≤ ± 0.01 % FS / °C typ.	
Sampling rate	Depending on length: 0.5 ms (measuring range ≤ 1200 mm) 1.0 ms (measuring range ≤ 2400 mm) 2.0 ms (measuring range ≤ 3000 mm)	
Environmental conditions		
Operating temperature range	-20 .. +75 °C, optionally -40 .. +75 °C	
Storage temperature range	-30 .. +85 °C	
CE mark	EN 61000-6-1 / 2 / 3 / 4	
Vibration resistance acc. to DIN EN 60068-2-6 at 50 .. 2000 Hz	≤ 10 g	
Shock resistance acc. to DIN EN 60068-2-27 (11 ms / half sine)	≤ 100 g	
Protection class acc. to DIN EN 60529 [2]	IP 67	
Installation position	No restrictions	
Other data		
Supply voltage	24 V DC ± 20 %	
Residual ripple of supply voltage	≤ 250 mVpp	
Current consumption without output	< 100 mA	
Weight	Depending on length: 30 mm: ~ 300 g 3000 mm: ~ 3900 g	

Note: Reverse polarity protection of the supply voltage, excess voltage and short circuit protection are provided.
FS (**F**ull **S**cale) = relative to complete measuring range

[1] Other measuring ranges on request.
[2] With mounted mating connector in corresponding protection class

Dimensions:

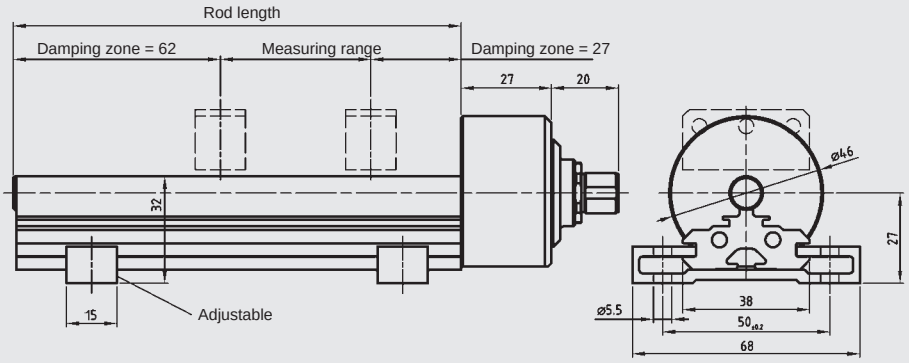

Model code:

HLT 2 5 5 0 – L2 – 006 – XXX – XXXX – 000

Design / geometry type
5 = profile

Model
L2 = profile, with top magnet guidance joint

Electrical connection
006 = male M12x1, 4 pole

Output signal
C01 = analogue 4 .. 20 mA, 3-conductor
C02 = analogue 20 .. 4 mA, 3-conductor
B01 = analogue 0 .. 10 V
B02 = analogue 10 .. 0 V

Measuring range in mm (30 .. 3000 mm in steps of 50 mm)
Example
0130 = 130 mm

Modification
000 = standard

Notes:
The position magnet must be ordered separately.

Scope of delivery:
- HLT 2550
- Operating manual

Accessories: (not supplied with instrument)

ZBL MVS35-39	magnet slide	part no.: 6105654
ZBL MV63	position magnet	part no.: 6084454
ZBL MF38-18	position magnet	part no.: 6084456
ZBL MU38-20	position magnet	part no.: 6084455
Mounting kit		part no.: 6105653

More detailed information on accessories as well as on further accessories, such as mating connectors, can be found in the Accessories brochure.

Pin connections:

M12x1, 4 pole

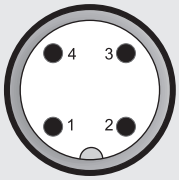

Pin	
1	$+U_B$
2	n.c.
3	0 V
4	Signal

Note:

The information in this brochure relates to the operating conditions and applications described.

For applications or operating conditions not described, please contact the relevant technical department.

Subject to technical modifications.

HYDAC ELECTRONIC GMBH
Hauptstr. 27, 66128 Saarbrücken
Germany
Telephone +49 (0)6897 509-01
Fax +49 (0)6897 509-1726
e-mail: electronic@hydac.com
Internet: www.hydac.com

Linear Position Transmitter HLT 2550-L2

Magnetostrictive | **For external mount** | **Resolution 0.05 mm**

CANopen

Description:

The HLT 2550 is a linear position transmitter which, due to its compact design, was developed in particular for use in applications where space is very limited. The measuring profile can be individually adapted to various mounting conditions by means of spacers.

The HLT 2550 is suited for measuring ranges up to 3 m.
In the CANopen version, the measured value is digitised and made available to the CAN field bus system via the CANopen protocol. The instrument parameters can be viewed and configured by the user via the CANopen object directory using standard CAN software.

The main fields of application for the HLT 2550 are, for example, general positioning tasks in mechanical engineering and in stationary hydraulics, or as a wear-free alternative for existing measuring equipment such as potentiometers.

Technical data:

Input data	
Measuring ranges [1]	30 .. 3000 mm in steps of 50 mm
Model	Profile, with top magnet guidance joint
Material	Measuring body: Aluminium
Output data	
Output signal	CANopen
Resolution	0.05 mm
Non-linearity	≤ ± 0.01 % FS, ≥ 0.06 mm
Hysteresis	≤ ± 0.1 mm
Repeatability	≤ ± 0.005 % FS, ≥ 0.05 mm
Temperature coefficient	≤ ± 0.01 % FS / °C typ.
Sampling rate	Depending on length: 0.5 ms (measuring range ≤ 1200 mm) 1.0 ms (measuring range ≤ 2400 mm) 2.0 ms (measuring range ≤ 3000 mm)
Environmental conditions	
Operating temperature range	-20 .. +75 °C, optionally -40 .. +75 °C
Storage temperature range	-30 .. +85 °C
CE mark	EN 61000-6-1 / 2 / 3 / 4
Vibration resistance acc. to DIN EN 60068-2-6 at 50 .. 2000 Hz	≤ 10 g
Shock resistance acc. to DIN EN 60068-2-27 (11 ms / half sine)	≤ 100 g
Protection class acc. to DIN EN 60529 [2]	IP 67
Installation position	No restrictions
Protocol data for CANopen	
Communication profile	CiA DS 301 V4.2
NMT-Services	CiA DSP 302 V4.1
Layer setting services and protocol	CiA DSP 305 V2.2
Encoder Device Profile	CiA DS 406 V3.2
Baud rates	10 kbit/s .. 1 Mbit/s acc. to DS305 V2.2
Transmission services - PDO - Transfer	 Measured value as 32 bit and float synchronous, asynchronous, cyclical
Node ID/baud rate	Adjustable via LSS
Other data	
Supply voltage	12 .. 24 V DC ± 10 %
Residual ripple of supply voltage	≤ 100 mA
Current consumption without output	< 100 mA
Weight	Depending on length: 30 mm: ~ 300 g 3000 mm: ~ 3900 g

Note: Reverse polarity protection of the supply voltage, excess voltage and short circuit protection are provided.
FS (**F**ull **S**cale) = relative to complete measuring range

[1] Other measuring ranges on request.
[2] With mounted mating connector in corresponding protection class

Dimensions:

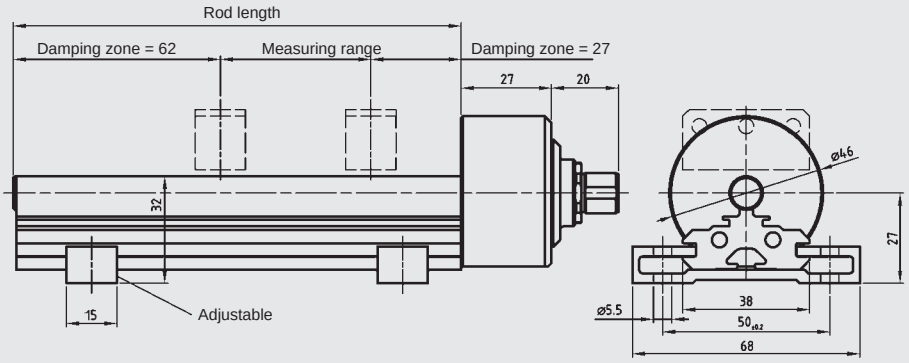

Model code:

HLT 2 5 5 0 – L2 – 008 – F11 – XXXX – 000

Design / geometry type
5 = profile

Model
L2 = profile, with top magnet guidance joint

Electrical connection
008 = male M12x1, 5 pole

Output signal
F11 = CANopen

Measuring range in mm (30 .. 3000 mm in steps of 50 mm)
Example
0130 = 130 mm

Modification
000 = standard

Notes:
The position magnet must be ordered separately.

Scope of delivery:
- HLT 2550
- Operating manual

Accessories: (not supplied with instrument)

ZBL MVS35-39	magnet slide	part no.: 6105654
ZBL MV63	position magnet	part no.: 6084454
ZBL MF38-18	position magnet	part no.: 6084456
ZBL MU38-20	position magnet	part no.: 6084455
Mounting kit		part no.: 6105653

More detailed information on accessories as well as on further accessories, such as mating connectors, can be found in the Accessories brochure.

Pin connections:

M12x1, 5 pole

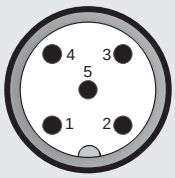

Pin	Signal	Description
1	n.c.	
2	$+U_B$	Supply+
3	0 V	Supply-
4	CAN_H	Bus line dominant high
5	CAN_L	Bus line dominant low

Note:

The information in this brochure relates to the operating conditions and applications described.

For applications or operating conditions not described, please contact the relevant technical department.

Subject to technical modifications.

HYDAC ELECTRONIC GMBH
Hauptstr. 27, 66128 Saarbrücken
Germany
Telephone +49 (0)6897 509-01
Fax +49 (0)6897 509-1726
e-mail: electronic@hydac.com
Internet: www.hydac.com

Linear Position Transmitter HLT 2550-L2

Magnetostrictive | **For external mount** | **Resolution 0.05 mm**

Synchronous serial interface

Description:

The HLT 2550 is a linear position transmitter which, due to its compact design, was developed in particular for use in applications where space is very limited. The measuring profile can be individually adapted to various mounting conditions by means of spacers.

The HLT 2550 is suited for measuring ranges up to 3 m.
In the version with synchronous serial interface, the measured value is made available via synchronous and symmetrical clock and data signals.

The main fields of application for the HLT 2550 are, for example, general positioning tasks in mechanical engineering and in stationary hydraulics, or as a wear-free alternative for existing measuring equipment such as potentiometers.

Technical data:

Input data	
Measuring ranges [1]	30 .. 3000 mm in steps of 50 mm
Model	Profile, with top magnet guidance joint
Material	Measuring body: Aluminium
Output data	
Output signal	SSI
Resolution	0.05 mm
Non-linearity	≤ ± 0.01 % FS, ≥ 0.06 mm
Hysteresis	≤ ± 0.1 mm
Repeatability	≤ ± 0.005 % FS, ≥ 0.05 mm
Temperature coefficient	≤ ± 0.01 % FS / °C typ.
Sampling rate	Depending on length: 0.5 ms (measuring range ≤ 1200 mm) 1.0 ms (measuring range ≤ 2400 mm) 2.0 ms (measuring range ≤ 3000 mm)
Environmental conditions	
Operating temperature range	-20 .. +75 °C, optionally -40 .. +75 °C
Storage temperature range	-30 .. +85 °C
CE mark	EN 61000-6-1 / 2 / 3 / 4
Vibration resistance acc. to DIN EN 60068-2-6 at 50 .. 2000 Hz	≤ 10 g
Shock resistance acc. to DIN EN 60068-2-27 (11 ms / half sine)	≤ 100 g
Protection class acc. to DIN EN 60529 [2]	IP 67
Installation position	No restrictions
Relevant data for SSI	
SSI clock input	Optocoupler
SSI data output	RS-422, 2-wire
SSI clock frequency	95 .. 1000 kHz
SSI monotime, typical	20 µs
Other data	
Supply voltage	24 V DC ± 20 %
Residual ripple of supply voltage	≤ 100 mA
Current consumption without output	< 100 mA
Weight	Depending on length: 30 mm: ~ 300 g 3000 mm: ~ 3900 g

Note: Reverse polarity protection of the supply voltage, excess voltage and short circuit protection are provided.
FS (**F**ull **S**cale) = relative to complete measuring range

[1] Other measuring ranges on request.
[2] With mounted mating connector in corresponding protection class

Dimensions:

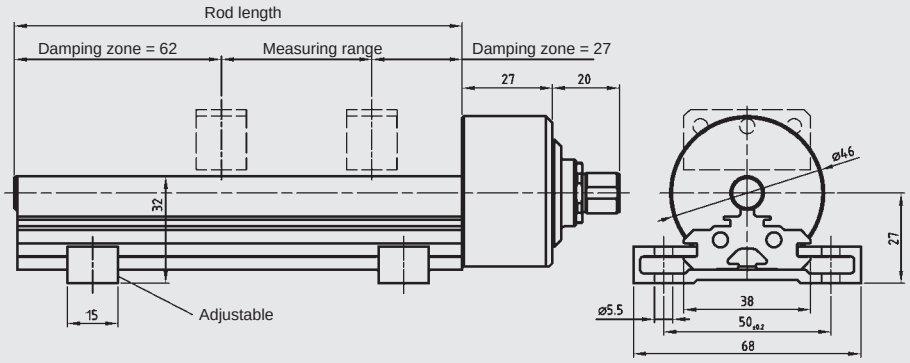

Model code:

HLT 2 5 5 0 - L2 - 00P - S16 - XXXX - XXX - XXX - 000

Design / geometry type
5 = profile

Model
L2 = profile,
with top magnet guidance joint

Electrical connection
00P = male M12x1, 8 pole

Output signal
S16 = SSI

Measuring range in mm (30 .. 3000 mm in steps of 50 mm)
Example
0130 = 130 mm

Code
B24 = binary code 24 bit
B25 = binary code 25 bit
G24 = Gray code 24 bit
G25 = Gray code 25 bit

System resolution
050 = 50 µm
100 = 100 µm
150 = 150 µm
200 = 200 µm

Modification
000 = standard

Notes:
The position magnet must be ordered separately.

Scope of delivery:
- HLT 2550
- Operating manual

Accessories: (not supplied with instrument)

ZBL MVS35-39	magnet slide	part no.: 6105654
ZBL MV63	position magnet	part no.: 6084454
ZBL MF38-18	position magnet	part no.: 6084456
ZBL MU38-20	position magnet	part no.: 6084455
Mounting kit		part no.: 6105653

More detailed information on accessories as well as on further accessories, such as mating connectors, can be found in the Accessories brochure.

Pin connections:

M12x1, 8 pole

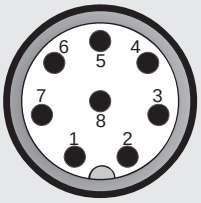

Pin	Description
1	Clock input +
2	Clock input -
3	Data output +
4	Data output -
5	n.c.
6	n.c.
7	+ U_B
8	0 V

Note:

The information in this brochure relates to the operating conditions and applications described.

For applications or operating conditions not described, please contact the relevant technical department.

Subject to technical modifications.

HYDAC ELECTRONIC GMBH
Hauptstr. 27, 66128 Saarbrücken
Germany
Telephone +49 (0)6897 509-01
Fax +49 (0)6897 509-1726
e-mail: electronic@hydac.com
Internet: www.hydac.com

Linear Position Transmitter HLT 2500-F1

Magnetostrictive | **For external mount** | **Resolution 50 µm**

Analogue

Description:

The sensor works on the principle of magnetostriction.

This measuring principle determines with high accuracy the position, distance and/ or speed and is based on elapsed time measurement.

Utilising this non-contact and wear-free measuring system, HYDAC offers a flat profile housing version in aluminium.

The different output signals (analogue current / voltage) enable connection to all HYDAC ELECTRONIC GmbH measurement and control devices as well as standard evaluation systems (e.g. PLC controls)

External set inputs for the analogue start point and end point offer an additional possibility of a customised adjustment.

The HLT 2500-F1 is primarily used in stationary applications, especially when a partially integrated solution in hydraulic cylinders is not possible.

Technical data:

Input data		
Measuring ranges	50 .. 4000 mm	
Model	Flat profile, without magnet guidance	
Housing	Aluminium	
Output data		
Output signal, permitted load resistance	Current:	4 .. 20 mA or 20 .. 4 mA Load resist. 200 .. 500 Ω
	Voltage:	0 .. 10 V or 10 .. 0 V Load resist.: min. 2 kΩ
Resolution	12 bit; ≥ 0.05 mm	
Non-linearity	± 0.15 mm ± 0.2 mm	(measuring range ≤ 1500 mm) (measuring range > 1500 mm)
Hysteresis	0.1 mm	
Repeatability	≤ 0.05 mm - ≤ 0.5 mm (depends on length)	
Temperature coefficient	≤ ± 0.004 % FS / °C	
Sampling rate	Depending on length: ≤ 1 m: 1.0 ms ≤ 2 m: 2.0 ms ≤ 3 m: 3.0 ms > 3 m: 3.5 ms	
Environmental conditions		
Operating temperature range	0 .. +70 °C; optionally -20 .. +70 °C	
Storage temperature range	-30 .. +85 °C	
CE mark	EN 61000-6-1 / 2 / 3 / 4	
Vibration resistance acc. to DIN EN 60068-2-6 at 50 .. 2000 Hz	≤ 10 g	
Shock resistance acc. to DIN EN 60068-2-27 (11 ms / half sine)	≤ 100 g	
Protection class acc. to DIN EN 60529 [1]	IP 65	
Installation position	No restrictions	
Other data		
Supply voltage	24 V DC ± 10 %	
Residual ripple of supply voltage	≤ 250 mV_{PP}	
Current consumption without output	< 100 mA	
Weight	Depending on length: 100 mm: 450 g 4000 mm: 3900 g	

Note: Reverse polarity protection of the supply voltage, overvoltage and short circuit protection are provided.
FS (**F**ull **S**cale) = relative to complete measuring range

[1] With mounted mating connector in corresponding protection class

Dimensions:

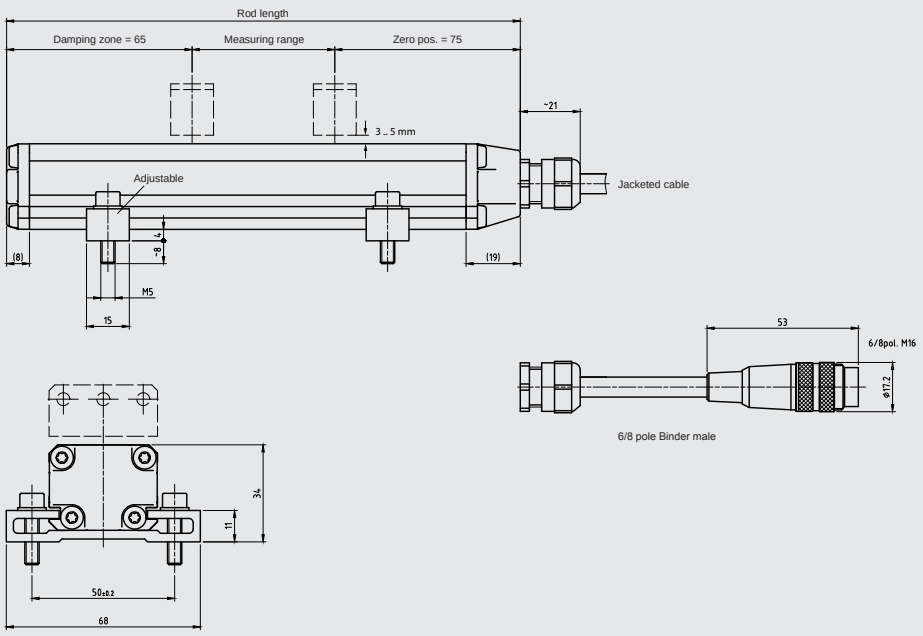

Model code:

HLT 2 5 0 0 – F1 – XXX – XXX – XXXX – 000

Design / geometry type
5 = profile

Model
F1 = flat profile, without magnet guidance

Electrical connection
K01 = jacketed cable, length 1 m
M06 = male M16, 6 pole
M08 = male M16, 8 pole

Output signal
C01 = analogue 4 .. 20 mA, 3-conductor
C02 = analogue 20 .. 4 mA, 3-conductor
B01 = analogue 0 .. 10 V
B02 = analogue 10 .. 0 V

Measuring range in mm (50 .. 4000 mm)
Example
0150 = 150 mm

Modification
000 = standard

Accessories: (not supplied with instrument)

ZBL MU38-18	position magnet	part no.: 6084456
ZBL mounting kit		part no.: 6105653

More detailed information on accessories as well as on further accessories, such as mating connectors, can be found in the Accessories brochure.

Pin connections:

Male M16, 6 pole

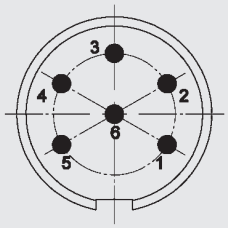

Pin	
1	Signal
2	0 V (analogue output)
3	Start point
4	End point
5	0 V
6	$+U_B$

Male M16, 8 pole

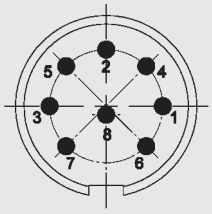

Pin	
1	n.c.
2	0 V (analogue output)
3	Start point
4	End point
5	Signal
6	0 V
7	$+U_B$
8	n.c.

Cable outlet

Lead	
brown	0 V (analogue output)
green	Start point
yellow	End point
grey	Signal
pink	0 V
blue	$+U_B$

Note:

The information in this brochure relates to the operating conditions and applications described.

For applications or operating conditions not described, please contact the relevant technical department.

Subject to technical modifications.

HYDAC ELECTRONIC GMBH
Hauptstraße 27, 66128 Saarbrücken
Germany
Telephone +49 (0)6897 509-01
Fax +49 (0)6897 509-1726
E-mail: electronic@hydac.com
Internet: www.hydac.com

Linear Position Transmitter HLT 2500-F1

Magnetostrictive | **For external mount** | **Resolution 1 µm**

CANopen

Description:

The sensor works on the principle of magnetostriction.

This measuring principle determines with high accuracy the position, distance and/ or speed and is based on elapsed time measurement.

Utilising this non-contact and wear-free measuring system, HYDAC offers a flat profile housing version in aluminium.

In the CANopen version, the measured value is digitised and made available to the CAN field bus system via the CANopen protocol. The instrument parameters can be viewed and configured by the user via the CANopen object directory using standard CAN software.

The HLT 2500-F1 is primarily used in stationary applications, especially when a partially integrated solution in hydraulic cylinders is not possible.

Technical data:

Input data	
Measuring ranges	50 .. 4000 mm
Model	Flat profile, without magnet guidance
Housing	Aluminium
Output data	
Output signal	CANopen
Resolution	0.001 mm
Non-linearity	± 0.15 mm (measuring range ≤ 1500 mm) ± 0.2 mm (measuring range > 1500 mm)
Hysteresis	≤ 0.1 mm
Repeatability	≤ 0.005 mm - ≤ 0.05 mm (depends on length)
Temperature coefficient	≤ ± 0.0015 % FS / °C
Sampling rate	Depending on length: ≤ 1.0 m: 1.0 ms ≤ 2.0 m: 2.0 ms ≤ 2.5 m: 2.5 ms > 2.5 m: 3.0 ms
Environmental conditions	
Operating temperature range	0 .. +70 °C; optionally -20 .. +70 °C
Storage temperature range	-30 .. +85 °C
CE mark	EN 61000-6-1 / 2 / 3 / 4
Vibration resistance acc. to DIN EN 60068-2-6 at 50 .. 2000 Hz	≤ 10 g
Shock resistance acc. to DIN EN 60068-2-27 (11 ms / half sine)	≤ 100 g
Protection class acc. to DIN EN 60529 [1]	IP 65
Installation position	No restrictions
Protocol data for CANopen	
Bus connection	ISO 11898-1, ISO 11898-2
CAN Specification 2.0 A	11-bit identifier
Device profile for encoder	CiA DS406
Layer Setting Services, LSS	CiA DS305
Layer Management Services, LMT	CiA DS205-1, DS205-2
Baud rates	800, 1000 kbit/s
Transmission services - PDO - Transfer	 Measured value as 32 bit and float synchronous, asynchronous, cyclical
Node ID/baud rate	Adjustable via LSS
Other data	
Supply voltage	24 V DC -20 .. +10 %
Residual ripple of supply voltage	≤ 250 mV_{PP}
Current consumption without output	≤ 150 mA
Weight	Depending on length: 100 mm: 550 g 4000 mm: 4000 g

Note: Reverse polarity protection of the supply voltage, overvoltage and short circuit protection are provided.
FS (**F**ull **S**cale) = relative to complete measuring range

[1] With mounted mating connector in corresponding protection class

Dimensions:

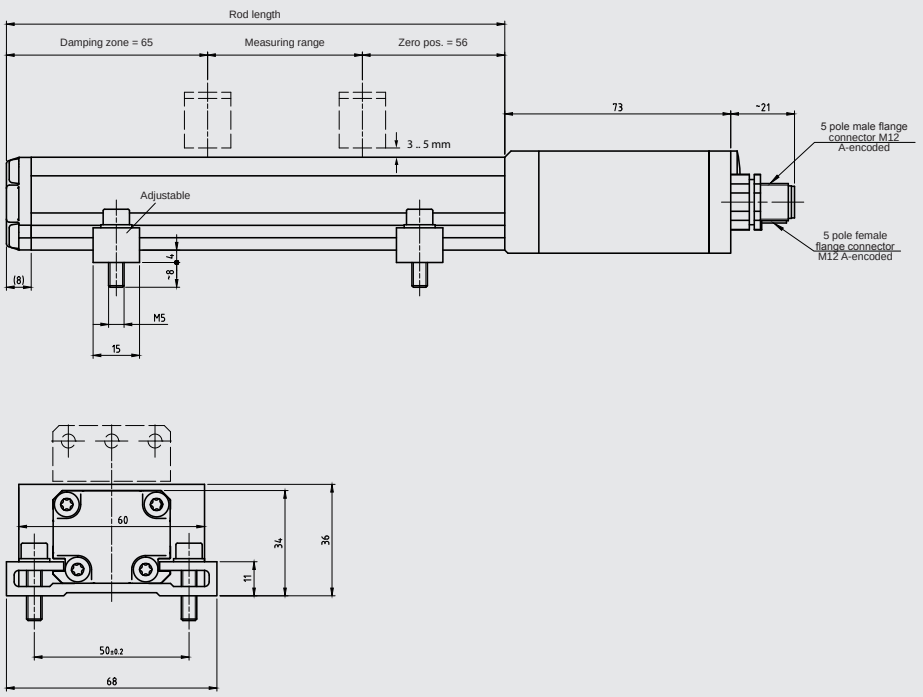

Model code:

HLT 2 5 0 0 – F1 – C61 – F11 – XXXX – 000

Design / geometry type
5 = profile

Model
F1 = flat profile, without magnet guidance

Electrical connection
C61 = female M12x1, 5 pole + male M12x1, 5 pole

Output signal
F11 = CANopen

Measuring range in mm (50 .. 4000 mm)
Example
0150 = 150 mm

Modification
000 = standard

Accessories: (not supplied with instrument)

ZBL MU38-18	position magnet	part no.: 6084456
ZBL mounting kit		part no.: 6105653

More detailed information on accessories as well as on further accessories, such as mating connectors, can be found in the Accessories brochure.

Pin connections:

Female M12x1, 5 pole, A-encoded

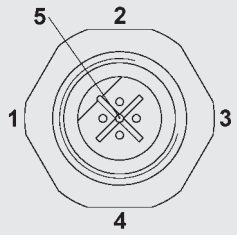

Pin	CANopen_OUT	
1	Housing	Shield/housing
2	$+U_B$	Supply +
3	0 V	Supply -
4	CAN_H	Bus line dominant high
5	CAN_L	Bus line dominant low

Male M12x1, 5 pole, A-encoded

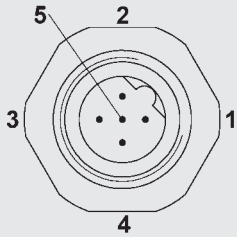

Pin	CANopen_IN	
1	Housing	Shield/housing
2	$+U_B$	Supply +
3	0 V	Supply -
4	CAN_H	Bus line dominant high
5	CAN_L	Bus line dominant low

Note:

The information in this brochure relates to the operating conditions and applications described.

For applications or operating conditions not described, please contact the relevant technical department.

Subject to technical modifications.

HYDAC ELECTRONIC GMBH
Hauptstraße 27, 66128 Saarbrücken
Germany
Telephone +49 (0)6897 509-01
Fax +49 (0)6897 509-1726
E-mail: electronic@hydac.com
Internet: www.hydac.com

Linear Position Transmitter HLT 2500-F1

Magnetostrictive | **For external mount** | **Resolution 1 µm**

Profibus

Description:

The sensor works on the principle of magnetostriction.

This measuring principle determines with high accuracy the position, distance and/ or speed and is based on elapsed time measurement.

Utilising this non-contact and wear-free measuring system, HYDAC offers a flat profile housing version in aluminium.

In the Profibus version, the measured value is digitised and made available to the field bus system via the Profibus protocol.

The HLT 2500-F1 is primarily used in stationary applications, especially when a partially integrated solution in hydraulic cylinders is not possible.

Technical data:

Input data	
Measuring ranges	50 .. 4000 mm
Model	Flat profile, without magnet guidance
Housing	Aluminium
Output data	
Output signal	Profibus
Resolution	0.001 mm
Non-linearity	± 0.1 mm (measuring range ≤ 1500 mm) ± 0.15 mm (measuring range > 1500 mm)
Hysteresis	0.02 mm (measuring range ≤ 1500 mm) 0.1 mm (measuring range > 1500 mm)
Repeatability	≤ 0.005 mm - ≤ 0.05 mm (depends on length)
Temperature coefficient	≤ ± 0.0015 % FS / °C
Sampling rate	Depending on length: ≤ 1.0 m: 1.0 ms ≤ 2.0 m: 2.0 ms ≤ 2.5 m: 2.5 ms > 2.5 m: 3.0 ms
Environmental conditions	
Operating temperature range	0 .. +70 °C; optionally -20 .. +70 °C
Storage temperature range	-30 .. +85 °C
CE mark	EN 61000-6-1 / 2 / 3 / 4
Vibration resistance acc. to DIN EN 60068-2-6 at 50 .. 2000 Hz	≤ 10 g
Shock resistance acc. to DIN EN 60068-2-27 (11 ms / half sine)	≤ 100 g
Protection class acc. to DIN EN 60529 [1)]	IP 65
Installation position	No restrictions
Protocol data for Profibus	
Profibus DP V0	IEC 61158, IEC 61784
PNO encoder profile	Class 1 and 2
Transmission rate parameter	9.6 .. 12000 kbit/s
Other data	
Supply voltage	24 V DC -20 .. +10 %
Residual ripple of supply voltage	≤ 250 mV_{PP}
Current consumption without output	< 150 mA
Weight	Depending on length: 100 mm: 550 g 4000 mm: 4000 g

Note: Reverse polarity protection of the supply voltage, overvoltage and short circuit protection are provided.
FS (**F**ull **S**cale) = relative to complete measuring range

[1)] With mounted mating connector in corresponding protection class

Dimensions:

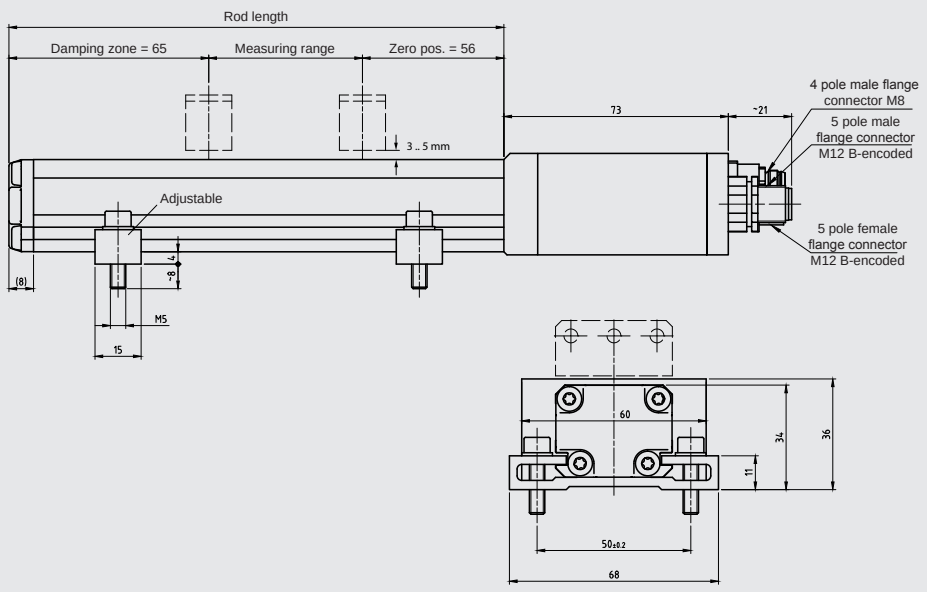

Model code:

HLT 2 5 0 0 – F1 – P61 – F41 – XXXX – 000

Design / geometry type
5 = profile

Model
F1 = flat profile, without magnet guidance

Electrical connection
P61 = female M12x1, 5 pole + male M12x1, 5 pole + male M8, 4 pole

Output signal
F41 = Profibus

Measuring range in mm (50 .. 4000 mm)
Example
0150 = 150 mm

Modification
000 = standard

Accessories: (not supplied with instrument)

ZBL MU38-18	position magnet	part no.: 6084456
ZBL mounting kit		part no.: 6105653

More detailed information on accessories as well as on further accessories, such as mating connectors, can be found in the Accessories brochure.

Pin connections:

Female M12x1, 5 pole, B-encoded

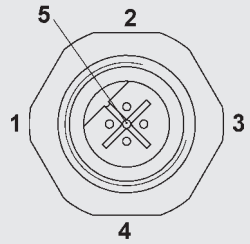

Pin	Profibus_OUT
1	VP, +5 V DC
2	Profibus, Data A
3	0 V
4	Profibus, Data B
5	n.c.
screw connection	Shield/housing

Male M12x1, 5 pole, B-encoded

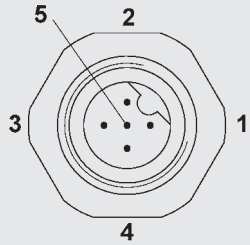

Pin	Profibus_IN
1	n.c.
2	Profibus, Data A
3	n.c.
4	Profibus, Data B
5	n.c.
screw connection	Shield/housing

Male M8x1, 4 pole

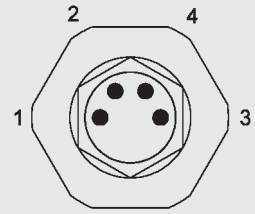

Pin	Profibus_IN
1	$+U_B$
2	n.c.
3	0 V
4	n.c.

Note:

The information in this brochure relates to the operating conditions and applications described.

For applications or operating conditions not described, please contact the relevant technical department.

Subject to technical modifications.

HYDAC ELECTRONIC GMBH
Hauptstraße 27, 66128 Saarbrücken
Germany
Telephone +49 (0)6897 509-01
Fax +49 (0)6897 509-1726
E-mail: electronic@hydac.com
Internet: www.hydac.com

Linear Position Transmitter HLT 2500-F1

Magnetostrictive | **For external mount** | **Resolution 50 µm**

Synchronous serial interface

Description:

The sensor works on the principle of magnetostriction.

This measuring principle determines with high accuracy the position, distance and/ or speed and is based on elapsed time measurement.

Utilising this non-contact and wear-free measuring system, HYDAC offers a flat profile housing version in aluminium.

In the version with synchronous serial interface, the measured value is made available via synchronous and symmetrical clock and data signals.

The HLT 2500-F1 is primarily used in stationary applications, especially when a partially integrated solution in hydraulic cylinders is not possible.

Technical data:

Input data	
Measuring ranges	50 .. 4000 mm
Model	Flat profile, without magnet guidance
Housing	Aluminium
Output data	
Output signal	SSI
Resolution	0.05 mm [1]
Non-linearity	± 0.15 mm (measuring range ≤ 1500 mm) ± 0.2 mm (measuring range > 1500 mm)
Hysteresis	≤ 0.1 mm
Repeatability	≤ 0.05 mm - ≤ 0.5 mm (depends on length)
Temperature coefficient	≤ ± 0.0015 % FS / °C
Sampling rate	Depending on length: ≤ 1.0 m: 1.0 ms ≤ 2.0 m: 1.5 ms ≤ 3.0 m: 2.0 ms > 3.0 m: 2.5 ms
Environmental conditions	
Operating temperature range	0 .. +70 °C; optionally -20 .. +70 °C
Storage temperature range	-30 .. +85 °C
CE mark	EN 61000-6-1 / 2 / 3 / 4
Vibration resistance acc. to DIN EN 60068-2-6 at 50 .. 2000 Hz	≤ 10 g
Shock resistance acc. to DIN EN 60068-2-27 (11 ms / half sine)	≤ 100 g
Protection class acc. to DIN EN 60529 [2]	IP 65
Installation position	No restrictions
Relevant data for SSI	
SSI clock input	Optocoupler
SSI data output	RS-422, 2-wire
SSI clock frequency	95 .. 1000 kHz
SSI monotime, typical	20 µs
Other data	
Supply voltage	24 V DC -20 .. +10 %
Residual ripple of supply voltage	≤ 250 mV_{PP}
Current consumption without output	≤ 250 mA
Weight	Depending on length: 100 mm: 550 g 4000 mm: 4000 g

Note: Reverse polarity protection of the supply voltage, overvoltage and short circuit protection are provided.
FS (**F**ull **S**cale) = relative to complete measuring range

[1] Other models on request.

[2] With mounted mating connector in corresponding protection class

Dimensions:

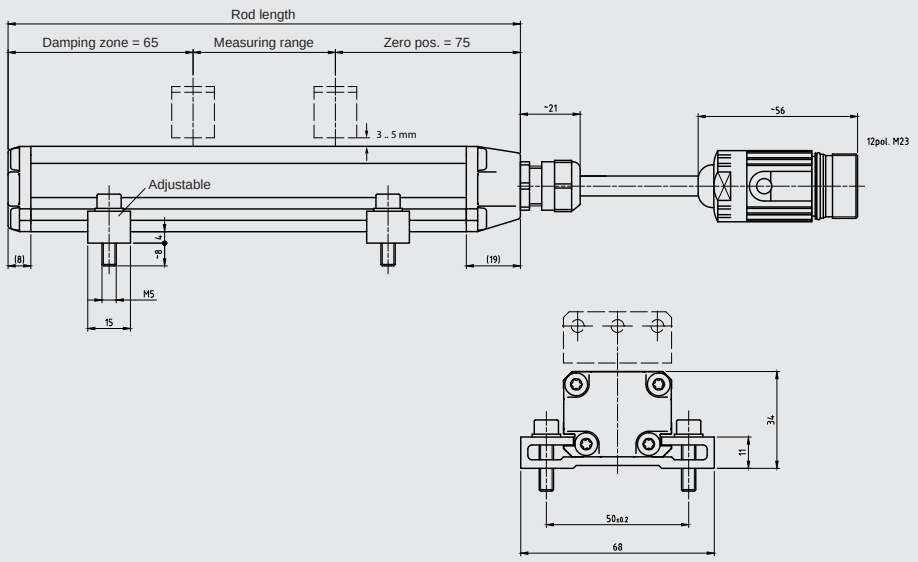

Model code:

HLT 2 5 0 0 - F1 - S01 - S16 - XXXX - XXX - XXX - 000

Design / geometry type
5 = profile

Model
F1 = flat profile, without magnet guidance

Electrical connection
S01 = separate CONTACT male,
12 pole with 1 m cable

Output signal
S16 = SSI

Measuring range in mm (50 .. 4000 mm)
Example
0150 = 150 mm

Code
B24 = binary code 24 bit
B25 = binary code 25 bit
G24 = Gray code 24 bit
G25 = Gray code 25 bit

System resolution
050 = 50 µm
100 = 100 µm
150 = 150 µm
200 = 200 µm

Modification
000 = standard

Accessories: (not supplied with instrument)

ZBL MU38-18	position magnet	part no.: 6084456
ZBL mounting kit		part no.: 6105653

More detailed information on accessories as well as on further accessories, such as mating connectors, can be found in the Accessories brochure.

Pin connections:

CONTACT male, 12 pole

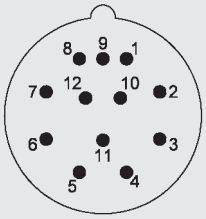

Pin	
1	SSI_Clock-_IN
2	SSI_Clock+_IN
3	SSI_DATA+_OUT
4	SSI_DATA-_OUT
5	RS 485 +_IN/OUT
6	RS 485 -_IN/OUT
7	n.c.
8	Direction IN
9	Preset1_IN
10	n.c.
11	$+U_B$_ IN
12	0 V _IN

Note:

The information in this brochure relates to the operating conditions and applications described.

For applications or operating conditions not described, please contact the relevant technical department.

Subject to technical modifications.

HYDAC ELECTRONIC GMBH
Hauptstraße 27, 66128 Saarbrücken
Germany
Telephone +49 (0)6897 509-01
Fax +49 (0)6897 509-1726
E-mail: electronic@hydac.com
Internet: www.hydac.com

Linear Position Transmitter HLT 2500-F1

Magnetostrictive | **For external mount** | **Resolution 1 µm**

EtherCAT

EtherCAT

Description:

The sensor works on the principle of magnetostriction.

This measuring principle determines with high accuracy the position, distance and/ or speed and is based on elapsed time measurement.

Utilising this non-contact and wear-free measuring system, HYDAC offers a flat profile housing version in aluminium.

In the EtherCAT version, the measured value is digitised and made available to the field bus system via the EtherCAT protocol.

The HLT 2500-F1 is primarily used in stationary applications, especially when a partially integrated solution in hydraulic cylinders is not possible.

Technical data:

Input data	
Measuring ranges	50 .. 4000 mm
Model	Flat profile, without magnet guidance
Housing	Aluminium
Output data	
Output signal	EtherCAT
Resolution	0.001 mm
Non-linearity	± 0.1 mm (measuring range ≤ 1500 mm) ± 0.15 mm (measuring range > 1500 mm)
Hysteresis	0.02 mm (measuring range ≤ 1500 mm) 0.1 mm (measuring range > 1500 mm)
Repeatability	≤ 0.005 mm - ≤ 0.05 mm (depends on length)
Temperature coefficient	≤ ± 0.0015 % FS / °C
Sampling rate	Depending on length: ≤ 0.5 m: 0.5 ms ≤ 1.0 m: 1.0 ms ≤ 2.0 m: 1.5 ms > 2.0 m: 2.0 ms
Environmental conditions	
Operating temperature range	0 .. +70 °C; optionally -20 .. +70 °C
Storage temperature range	-30 .. +85 °C
CE mark	EN 61000-6-1 / 2 / 3 / 4
Vibration resistance acc. to DIN EN 60068-2-6 at 50 .. 2000 Hz	≤ 10 g
Shock resistance acc. to DIN EN 60068-2-27 (11 ms / half sine)	≤ 100 g
Protection class acc. to DIN EN 60529 [1]	IP 65
Installation position	No restrictions
Protocol data for EtherCAT	
EtherCAT	IEC 61158-1-6, IEC 61784-2
Physical Layer	Fast Ethernet, ISO/IEC 8802-3
Device profile	CoE, CiA DS-406
Transmission rate parameter	100 Mbit/s
Cycle time	100 .. 20000 µs
Other data	
Supply voltage	24 V DC -20 .. +10 %
Residual ripple of supply voltage	≤ 250 mV_{PP}
Current consumption without output	≤ 300 mA
Weight	Depending on length: 100 mm: 550 g 4000 mm: 4000 g

Note: Reverse polarity protection of the supply voltage, overvoltage and short circuit protection are provided.
FS (**F**ull **S**cale) = relative to complete measuring range

[1] With mounted mating connector in corresponding protection class

Dimensions:

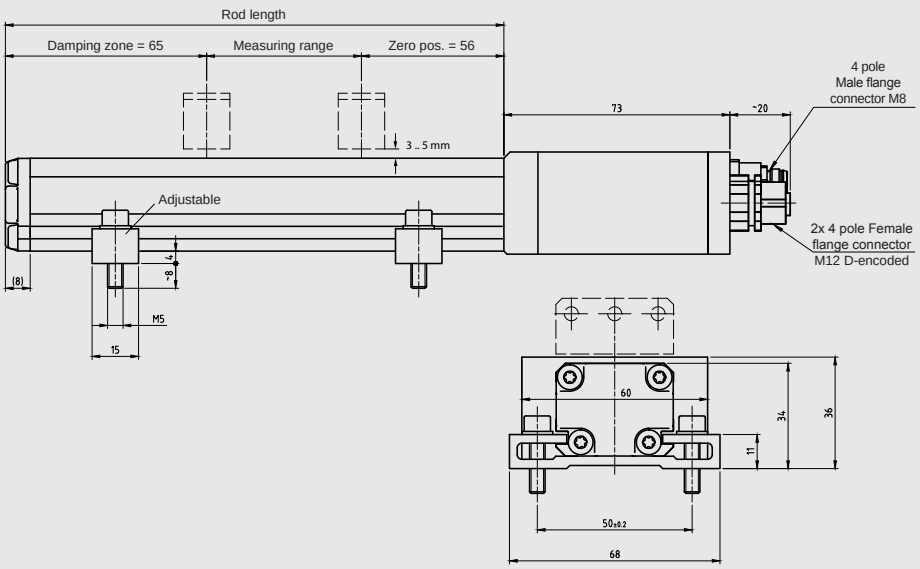

Model code:

HLT 2 5 0 0 – F1 – E51 – F51 – XXXX – 000

Design / geometry type
5 = profile

Model
F1 = flat profile, without magnet guidance

Electrical connection
E51 = 2 female M12x1, 4 pole + male M8, 4 pole

Output signal
F51 = EtherCAT

Measuring range in mm (50 .. 4000 mm)
Example
0150 = 150 mm

Modification
000 = standard

Accessories: (not supplied with instrument)

ZBL MU38-18	position magnet	part no.: 6084456
ZBL mounting kit		part no.: 6105653

More detailed information on accessories as well as on further accessories, such as mating connectors, can be found in the Accessories brochure.

Pin connections:

Female M12x1, 4 pole, D-encoded

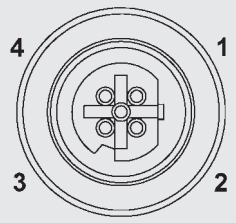

Pin	Port IN / Port OUT
1	Transmission data +
2	Receive data +
3	Transmission data -
4	Receive data -

Male M8x1, 4 pole

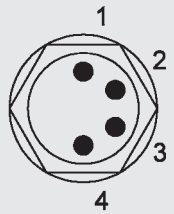

Pin	
1	$+U_B$
2	n.c.
3	0 V
4	n.c.

Note:

The information in this brochure relates to the operating conditions and applications described.

For applications or operating conditions not described, please contact the relevant technical department.

Subject to technical modifications.

HYDAC ELECTRONIC GMBH
Hauptstr. 27, 66128 Saarbrücken
Germany
Telephone +49 (0)6897 509-01
Fax +49 (0)6897 509-1726
e-mail: electronic@hydac.com
Internet: www.hydac.com

Distance Switch HLS 528

Ultrasound | Display

Up to 2 switching outputs

Description:

The distance sensor HLS 528 is a non-contact, highly compact sensor for measuring distances to fluids and objects.

By definition, its functional principle (measurement of sound transmission time) means that it operates with an extremely high resolution and sampling rate.

Thanks to the integrated temperature compensation, the sensors can be used in a wide temperature range.

The HLS 528 is available for measuring ranges up to 6000 mm, in three signal output versions (2 switching outputs; 1 analogue output, either 4 .. 20 mA or 0 .. 10 V, plus 1 or 2 switching outputs).

The sensor can be adjusted simply and conveniently using two push-buttons and a self-explanatory menu structure. A 3-digit display indicates the most recent distance and two three-colour LEDs also show the operating condition.

Technical data:

Input data						
Operating range	mm	250	350	1300	3400	6000
Blind zone	mm	0 .. 30	0 .. 85	0 .. 200	0 .. 350	0 .. 600
Maximum range	mm	350	600	2000	5000	8000
Resolution			≤ 0.18 mm			
Mechanical connection			M30x1.5			
Output data						
Switching outputs			1; 2 PNP transistor outputs Switching current: 1 SP: max. 200 mA 2 SP: max. 200 mA per output Switching cycles: > 100 million			
Analogue output, permitted load resistance			Selectable (invertible): 4 .. 20 mA, R_{Lmax} = 100 Ω (U_B ≤ 20 V) R_{Lmax} = 500 Ω (U_B > 20 V) 0 .. 10 V, R_{Lmin} = 100 kΩ (U_B ≥ 18 V)			
Accuracy			≤ ± 1 % of the actual measured value			
Repeatability			± 0.15 % of the actual measured value			
Reaction time	ms	50	70	110	180	240
Environmental conditions						
Ambient temperature range			-25 °C .. +70 °C			
Storage temperature range			-40 °C .. +85 °C			
Max. tank pressure			Only for depressurised vessels			
CE mark			DIN EN 60947-5-2 DIN EN 60947-5-7			
Vibration resistance acc. to DIN EN 60068-2-6 (5 .. 2000 Hz)			≤ 2 g			
Shock resistance acc. to DIN EN 60068-2-27 (11 ms)			≤ 30 g			
Protection class acc. to DIN EN 60529[1)]			IP 67			
Other data						
Supply voltage			9 .. 30 V DC without analogue output 18 .. 30 V DC with analogue output			
Residual ripple of supply voltage			± 10 %			
Current consumption			≤ 80 mA			
Housing			Brass, nickel-plated; ultrasonic transducer with PEEK film			
Display			3-digit LED display, 2 three-colour LEDs			
Weight	g	~ 150	~ 150	~ 150	~ 210	~ 270

Note: Reverse polarity protection of the supply voltage and load short circuit protection are provided.

[1)] With mounted mating connector in corresponding protection class

Setting options:

All the settings available on the HLS 528 are grouped in two easy-to-navigate menus.

In order to prevent unauthorised adjustment of the instrument, a key-lock can be set.

Setting ranges of the switch points and switch-back hystereses:

Switch point function distance

Operating range	Switch point*	Hysteresis*
250 mm	30 .. 350 mm	1 .. 320 mm
350 mm	85 .. 600 mm	1 .. 515 mm
1300 mm	200 .. 999 mm	1 .. 999 mm
	100 .. 200 cm	100 .. 180 cm
3400 mm	350 .. 999 mm	1 .. 999 mm
	100 .. 500 cm	100 .. 465 cm
6000 mm	600 .. 999 mm	1 .. 999 mm
	100 .. 800 cm	100 .. 740 cm

Window function distance

Operating range	Lower switch value*	Upper switch value*
250 mm	30 .. 348 mm	32 .. 350 mm
350 mm	85 .. 598 mm	87 .. 600 mm
1300 mm	200 .. 999 mm	202 .. 999 mm
	100 .. 198 cm	100 .. 200 cm
3400 mm	350 .. 999 mm	352 .. 999 mm
	100 .. 498 cm	100 .. 500 cm
6000 mm	600 .. 999 mm	602 .. 999 mm
	100 .. 798 cm	100 .. 800 cm

* The increment for all devices is 1 mm or cm

Recording ranges (for different objects):

The dark-grey areas specify the range in which the normal reflector (round bar) is detected safely. This is the typical working range of the sensors. The light grey areas illustrate the range in which a very large reflector, e.g. a very large plate, is still detected, provided it is aligned optimally to the sensor. Ultrasonic reflections cannot be evaluated outside the light grey area.

Operating range 250 mm:

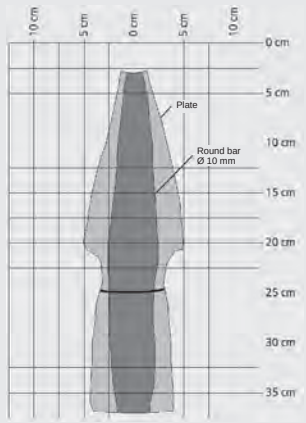

Operating range 350 mm:

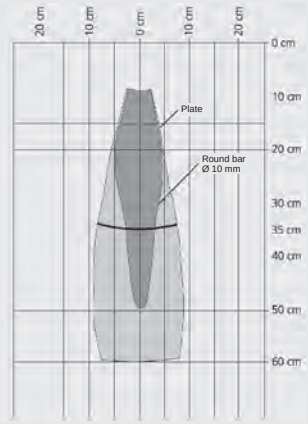

Operating range 1300 mm:

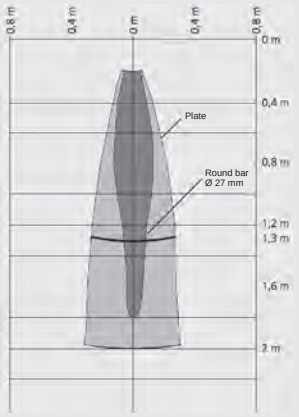

Operating range 3400 mm:

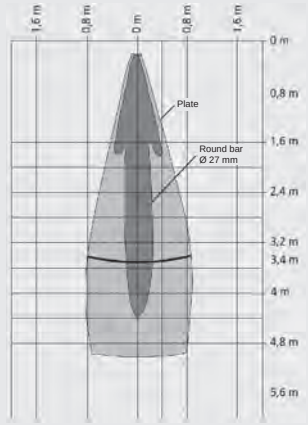

Operating range 6000 mm:

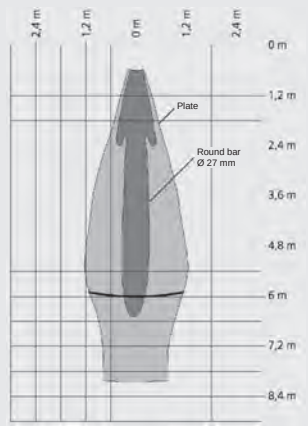

Additional functions:

- Switching mode of the switching outputs adjustable (switch point function or window function)
- Switching direction of the switching outputs adjustable (N/C or N/O function)
- Switch-on delay adjustable from 0 to 20 seconds
- Energy saving mode

Pin connections:

M12x1, 5 pole

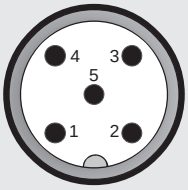

Pin	HLS 528-2
1	$+U_B$
2	D1 (switching output 1)
3	$-U_B$ (0 V)
4	D2 (switching output 2)
5	Synchronisation

Pin	HLS 528-3
1	$+U_B$
2	Analogue
3	$-U_B$ (0 V)
4	D (switching output)
5	Synchronisation

Pin	HLS 528-5
1	$+U_B$
2	Analogue
3	$-U_B$ (0 V)
4	D2 (switching output 2)
5	D1 (switching output 1)

Dimensions:

Operating range:

250 mm

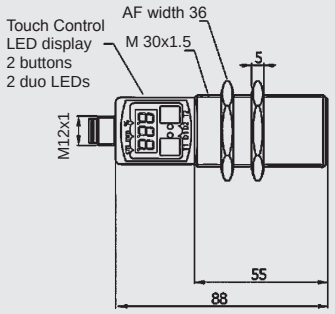

350 mm,1300 mm

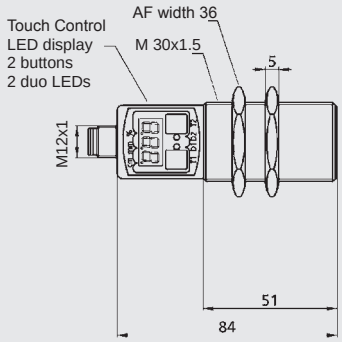

Operating range:

3400 mm

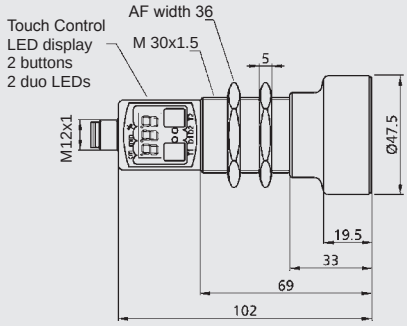

6000 mm

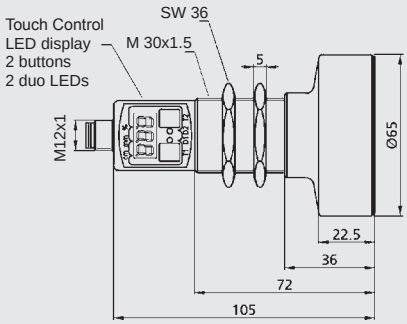

Model code:

HLS 5 2 8 – X – XXXX – 000 – F

Mechanical connection
2 = M30x1.5

Electrical connection
8 = male M12x1, 5 pole
(mating connector not supplied)

Output
2 = 2 switching outputs
3 = 1 switching output and 1 analogue output
5 = 2 switching outputs and 1 analogue output

Operating range in mm
0250; 0350; 1300, 3400, 6000

Modification number
000 = standard

Design, front face of sensor
F = foil

Accessories:
Appropriate accessories, such as mating connectors, can be found in the Accessories brochure.

Note:

The information in this brochure relates to the operating conditions and applications described.

For applications or operating conditions not described, please contact the relevant technical department.

Subject to technical modifications.

HYDAC ELECTRONIC GMBH
Hauptstraße 27, 66128 Saarbrücken
Germany
Telephone +49 (0)6897 509-01
Fax +49 (0)6897 509-1726
E-mail: electronic@hydac.com
Internet: www.hydac.com

Position Switch
HLS 100 for series applications

Increased Functional Safety

Description:

The position switch series HLS 100 has been specifically developed to detect the end position of safety-related devices on mobile machinery.

The position switches are designed for continuous use in safety circuits/safety functions as part of the functional safety of machines up to SIL 2 (IEC 61508) or PL d (ISO 13849).

The HLS 100 consists of two parts, the encoder magnet and the sensor unit.

Using two Hall sensors integrated into the sensor unit, the sensor detects the defined position (end position) of the magnet and transmits the switching condition “ON” if this position is detected, or otherwise the switching condition “OFF”.

Switching conditions are output as permanent PWM signals.

During stable normal operation, the position switch cyclically performs internal diagnostic steps, which identify systematic and random errors.

Errors which occur are therefore detected immediately. The output signal is then deactivated completely and the sensor is restarted.

Special features:

- Compact design
- Robust housing suitable for mobile applications
- High operating temperature range
- PWM output
- IP 67 male connector
- SIL 2 / PL d certification

Technical data:

Input data	
Switching range [1]	± 3 .. ± 9 mm
Switching distance magnet–sensor [1]	0 .. 11 mm
Lateral offset magnet–sensor [1]	± 6 mm
Plate thickness	Magnet: min. 5 mm Sensor: 6 .. 8 mm
Output data	
Type	PWM 50 Hz ± 3 % (push-pull)
Duty cycle of the output signal OFF (magnet outside the switching range)	26 ± 1 %
Duty cycle of the output signal ON (magnet within the switching range)	74 ± 1 %
Output current consumption	
High level	60 mA min. / 150 mA max.
Low level	30 mA min. / 110 mA max.
Output voltage	
High level	> $+U_B$ – 1.2 V with I = 10 mA
Low level	< GND + 0.2 V with I = 10 mA
Response times after activation	0.5 .. 1.5 s
Output signal response time	< 100 ms
Internal diagnosis interval	≤ 500 ms typ. (hardware) ≤ 1 s (memory elements)
Environmental conditions	
Nominal temperature range (function)	-30 .. +85 °C
Operating temperature range (failsafe)	-40 .. +100 °C
Storage temperature range	-60 .. +110 °C
CE mark	EN 61000-6-1 / 2 / 3 / 4
Functional safety	SIL 2 acc. to EN 61508 PL d acc. to ISO 13849
Vibration resistance acc. to DIN EN 60068-2-6 at 10 .. 500 Hz	25 g
Shock resistance acc. to DIN EN 60068-2-27 (6 ms)	50 g (half sine)
Protection class acc. to DIN EN 60529	IP 67
Other data	
Electrical connection [2]	Male connector ITT Canon Sure Seal, 3 pole
Supply voltage	8 .. 32 V DC
Current consumption	< 10 mA (inactive output)
Residual ripple of supply voltage	≤ 5 %
Life expectancy	10 years
Weight	Sensor ~ 75 g Magnet ~ 25 g
Safety-related data	
Performance level	
Based on	DIN EN ISO 13849-1: 2008
PL	d
Architecture	Category 2
Safety Integrity Level	
Based on	DIN EN 61508: 2001 1oo1 - B
SIL	2

Note: Reverse polarity protection of the supply voltage, overvoltage, override and short circuit protection are provided.

FS (**F**ull **S**cale) = relative to complete measuring range

[1] All values apply to installation in magnetic steel plate of the required plate thickness. If installed in thicker steel plates or other materials, the entire system must be tested in detail.

[2] Other connectors available on request

Dimensions:

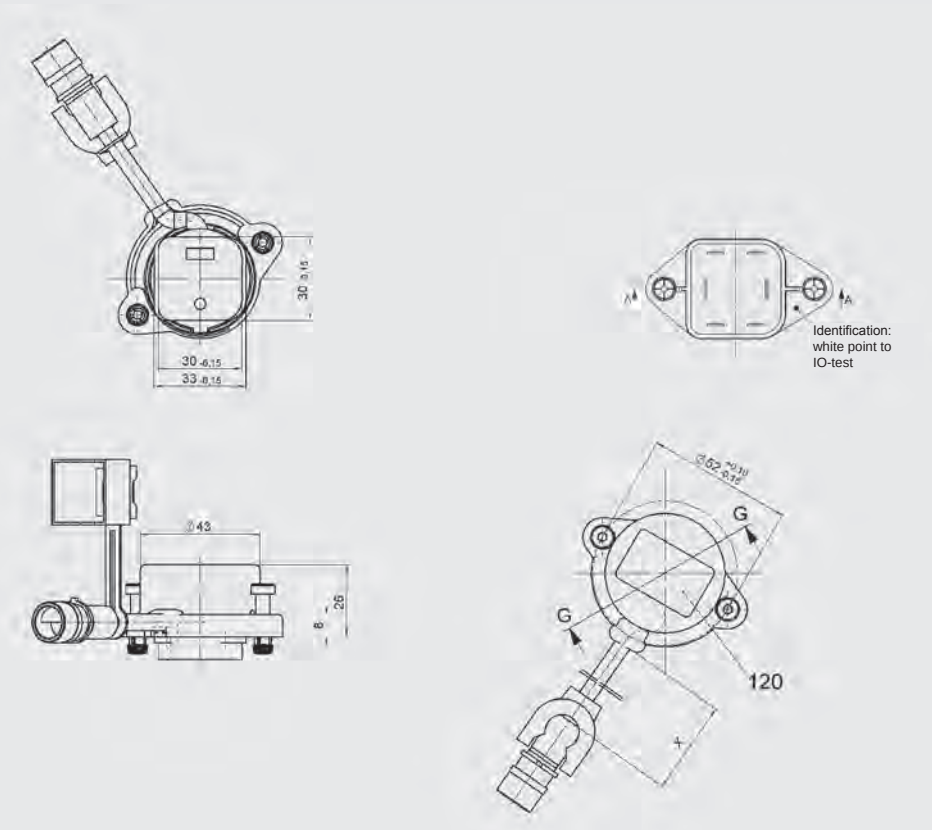

Switching ranges:

Switching range:

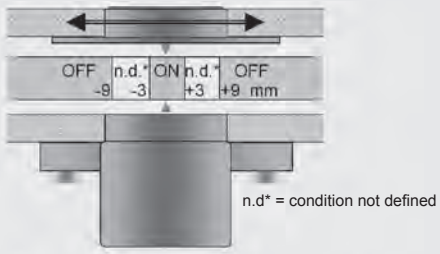

Switching distance:

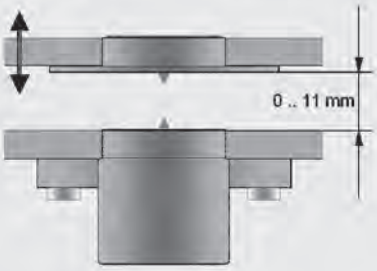

Lateral offset:

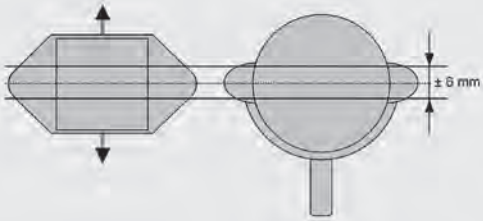

Order details:

The electronic positioning switch HLS 100 has been especially developed for OEM customers and is available for minimum order quantities of 100 units per type.

For precise specifications, please contact the Sales Department of HYDAC ELECTRONIC.

Note:

The information in this brochure relates to the operating conditions and applications described.

For applications or operating conditions not described, please contact the relevant technical department.

Subject to technical modifications.

HYDAC ELECTRONIC GMBH
Hauptstraße 27, 66128 Saarbrücken
Germany
Telephone +49 (0)6897 509-01
Fax +49 (0)6897 509-1726
E-mail: electronic@hydac.com
Internet: www.hydac.com

Special Products
Position Sensors and Position Switches

The position sensors and switches have been developed for short distance monitoring and can be used on the one hand for monitoring valve settings and on the other as part of a closed loop control. Based on different measuring techniques, HYDAC provides different variants for a diverse range of applications.

Position switch IES 2010 / 2015 / 2020

The position switch for monitoring valve settings (end or centre position) is primarily used in stationary applications such as:

- Hydraulic presses
- Plastics machinery
- Machine tools

Special features:

- Pressure-resistant up to 400 bar
- Inductive measurement (LVDT)
- Various stroke sizes
- Output: 2 switching outputs with changeover function
- Electrical connection: M12x1 (4 pole)

Position sensor IWE 40

The IWE 40 position sensors for short distance detection are primarily used in stationary applications such as:

- Hydraulic presses
- Plastics machinery
- Machine tools

Special features:

- Pressure-resistant up to 400 bar
- Inductive measurement (LVDT)
- Different measuring ranges (up to max. ±7 mm)
- Output: analogue 4 .. 20 mA
- Electrical connection: M12x1 (4 pole)

Position switch HLS 200 with increased functional safety

The position switch HLS 200 is used for reliable detection of valve centre positions. They are used both in mobile and in stationary applications.

Special features:

- PL d certification
- Measuring technique: IR light barriers
- Output: 2 switching outputs with changeover function
- Electrical connection: M12x1 (4 pole); Deutsch DT 04 (4 pole)

Order details:

The position sensors and position switches are OEM products which have been especially developed for volume production customers.

For precise specifications, please contact the Sales Department of HYDAC ELECTRONIC.

Note:

The information in this brochure relates to the operating conditions and applications described.

For applications or operating conditions not described, please contact the relevant technical department.

Subject to technical modifications.

HYDAC ELECTRONIC GMBH
Hauptstr. 27, 66128 Saarbrücken
Germany
Phone +49 (0)6897 509-01
Fax +49 (0)6897 509-1726
e-mail: electronic@hydac.com
Internet: www.hydac.com

EN 18.611.1/02.18

LEVEL SENSORS [6]

LEVEL TRANSMITTERS

			Page
GENERAL APPLICATIONS			
Magnetostrictive			
HNT 1200			345
HNT 1100		CAN	347

LEVEL SWITCHES

GENERAL APPLICATIONS			
Capacitive			
ENS 3000	Display		349
ENS 3000	Display	IO-Link	353
Magnetostrictive			
HNS 3000	Display		355
HNS 3000	Display	IO-Link	359
Ultrasonic			
HNS 526	Display		361

Electronic Level Transmitter HNT 1200

Magnetostrictive

Description:

The level transmitter HNT 1200 is a float-based sensor for highly accurate measuring of fluid levels.

The sensor is available with rod lengths from 250 .. 730 mm. Rod lengths of up to 2500 mm are possible.

HYDAC offers the HNT 1200 in a pressure-resistant stainless steel housing for in-tank installation. Depending on the application, several different floats are available, e.g. stainless steel for aggressive media or plastic.

The output signals enable the connection to all HYDAC ELECTRONIC GmbH measurement and control devices as well as connection to standard evaluation systems (e.g. PLC controls).

Technical data:

Input data							
Measuring ranges	mm	178	208	298	338	448	658
Rod length [1]	mm	250	280	370	410	520	730
Max. speed of change in fluid level	No restrictions						
Mechanical connection	G ¾ A ISO 1179-2						
Tightening torque, recommended	30 Nm						
Parts in contact with fluid	Rod: Stainless steel (1.4301 / 1.4571) Float: PP (polypropylene) 0.6 kg/dm³ Seal: Seal ring DIN 3869-27-FKM						
Fluids [2]	Hydraulic oils, cooling lubricants						
Output data							
Analogue output, permitted load resistance	4 .. 20 mA, load resist.: max. 500 Ω 0 .. 10 V, load resist.: min. 1 kΩ						
Accuracy [3]	≤ ± 1 % FS						
Temperature coefficient	≤ ± 0.01 % FS / °C						
Non-linearity	≤ ± 1 % FS						
Repeatability	≤ ± 1 % FS						
Environmental conditions							
Ambient temperature range	-25 .. +85 °C						
Storage temperature range	-40 .. +100 °C						
Fluid temperature range [4]	-40 .. +120 °C / -25 .. +120 °C						
Max. tank pressure	3 bar (short-term 10 bar, t < 1 min)						
CE mark	EN 61000-6-1 / 2 / 3 / 4						
Vibration resistance acc. to DIN EN 60068-2-6	7.5 mm (5 .. 8.2 Hz) 2.0 g (8.2 .. 150 Hz)						
Shock resistance acc. to DIN EN 60068-2-27 (11 ms)	20 g						
Protection class acc. to DIN EN 60529 [5]	IP 67						
Other data							
Supply voltage (U_B)	9 .. 36 V DC						
Residual ripple supply voltage	≤ 250 mV_{SS}						
Current consumption (without output)	≤ 100 mA						
Weight	Depending on length: 425 g (250 mm); 570 g (730 mm)						

Note: Reverse polarity protection of the supply voltage, overvoltage, override and short circuit protection are provided.
FS (**F**ull **S**cale) = relative to complete measuring range

[1] Other rod lengths on request
[2] Other fluids on request
[3] Specified at calm, non-turbulent fluid
[4] -25 °C with FKM seal, -40 °C on request
[5] With mounted mating connector in corresponding protection class

Dimensions:

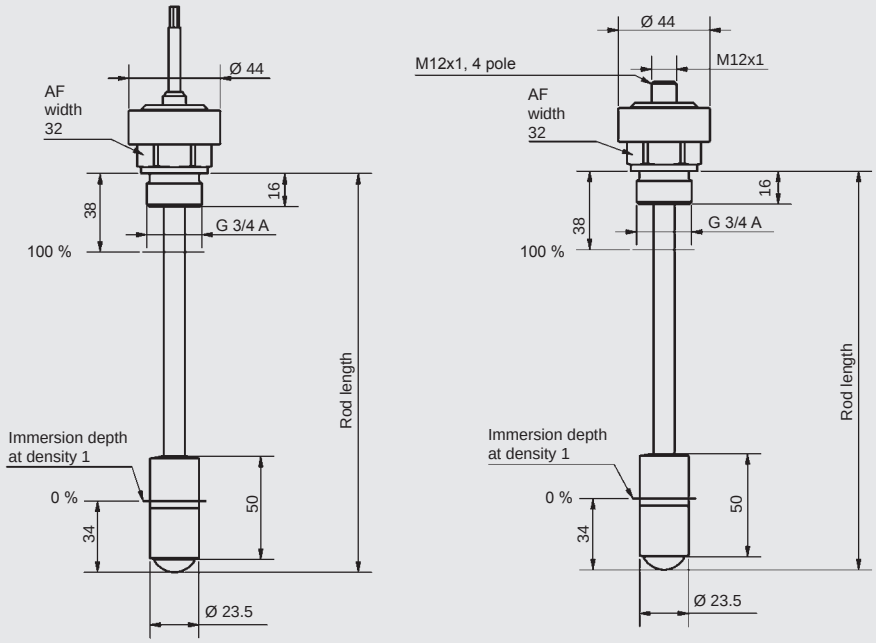

Model code:

HNT 1 2 2 X – X – XXXX – 000

Mechanical connection
2 = G ¾ A ISO 1179-2

Electrical connection
1 = jacketed cable, 2 m
6 = male M12x1, 4 pole

Output signal
B = 0 .. 10 V, 3-conductor
C = 4 .. 20 mA, 3-conductor

Rod length (physical) in mm
0250; 0280; 0370; 0410; 0520; 0730

Modification number
000 = standard

Accessories:
Appropriate accessories, such as mating connectors, can be found in the Accessories brochure.

Pin connections:

M12x1, 4 pole

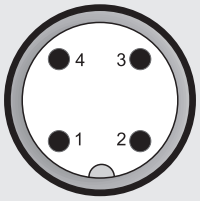

Pin	HNT 1226
1	$+U_B$
2	n.c.
3	0 V
4	Signal

Cable outlet

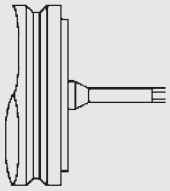

Lead	HNT 1221
brown	$+U_B$
white	0 V
green	Signal

Note:

The information in this brochure relates to the operating conditions and applications described.

For applications or operating conditions not described, please contact the relevant technical department.

Subject to technical modifications.

HYDAC ELECTRONIC GMBH
Hauptstraße 27, 66128 Saarbrücken
Germany
Telephone +49 (0)6897 509-01
Fax +49 (0)6897 509-1726
E-mail: electronic@hydac.com
Internet: www.hydac.com

Electronic Level Transmitter HNT 1100

Magnetostrictive

With temperature measurement

Description:

The level transmitter HNT 1100 is a float-based sensor for highly accurate measuring of fluid levels.

The sensor is available with rod lengths from 250 .. 730 mm. Rod lengths of up to 2500 mm are possible.

HYDAC offers the HNT 1100 in a pressure-resistant stainless steel housing for in-tank installation.

The integrated temperature sensor makes it possible for both fill level and temperature to be measured at one single measuring point. Depending on the application, several different floats are available, e.g. stainless steel for aggressive media or plastic.

In the CANopen version, the measured level is digitised and made available to the CAN field bus system via the CANopen protocol. The instrument parameters can be viewed and configured by the user via the CANopen object directory using standard CAN software.

Technical data:

Input data							
Measuring ranges	mm	178	208	298	338	448	658
Rod length [1]	mm	250	280	370	410	520	730
Max. speed of change in fluid level	No restrictions						
Mechanical connection	G ¾ A ISO 1179-2						
Tightening torque, recommended	30 Nm						
Parts in contact with fluid	Rod: Stainless steel (1.4301 / 1.4571) Float: PP (polypropylene) 0.6 kg/dm³ Seal: Seal ring DIN 3869-27-FKM						
Fluids [2]	Hydraulic oils, cooling lubricants						
Temperature							
Measuring range [3]	-25 .. +100 °C						
Output data							
Output signal	CANopen						
Accuracy [4]	Level: ≤ ± 1 % FS Temperature: ± 1.5 °C						
Temperature coefficient	≤ ± 0.003 % FS / °C						
Non-linearity	≤ ± 1 % FS						
Repeatability	Level: ≤ ± 1 % FS Temperature: ≤ ± 0.5 °C						
Response time acc. to DIN EN 60751 (temperature probe)	t_{90} ~ 100 s						
Environmental conditions							
Ambient temperature range	-40 .. +85 °C						
Storage temperature range	-40 .. +100 °C						
Fluid temperature range [5]	-40 .. +120 °C / -25 .. +120 °C						
Max. tank pressure	3 bar (short-term 10 bar, t < 1 min)						
CE mark	EN 61000-6-1 / 2 / 3 / 4						
Vibration resistance acc. to DIN EN 60068-2-6	7.5 mm (5 .. 8.2 Hz) / 2.0 g (8.2 .. 150 Hz)						
Shock resistance acc. to DIN EN 60068-2-27 (11 ms)	20 g						
Protection class acc. to DIN EN 60529 [6]	IP 67						
Protocol data for CANopen:							
Communication profile	CiA DS 301 V4.2						
Device profile	CiA DS 404 V1.3						
Layer setting services and protocol	CiA DSP 305 V2.2						
Baud rates	10 kbit .. 1 Mbit acc. to DS305 V2.2						
Transmission services - PDO - Transfer	Measured value as 16/32 bit, float, status synchronous, asynchronous, cyclical, measured value change						
Node ID/baud rate	Adjustable via LSS						
Other data							
Supply voltage (U_B)	9 .. 36 V DC						
Residual ripple supply voltage	≤ 250 mV_{SS}						
Current consumption (without output)	≤ 100 mA						
Weight	Depending on length: 425 g (250 mm); 570 g (730 mm)						

Note: Reverse polarity protection of the supply voltage, overvoltage, override and short circuit protection are provided.
FS (**F**ull **S**cale) = relative to complete measuring range

[1] Other rod lengths on request
[2] Other fluids on request
[3] Observe ambient temperature range
[4] Specified at calm, non-turbulent fluid
[5] -25 °C with FKM seal, -40 °C on request
[6] With mounted mating connector in corresponding protection class

Dimensions:

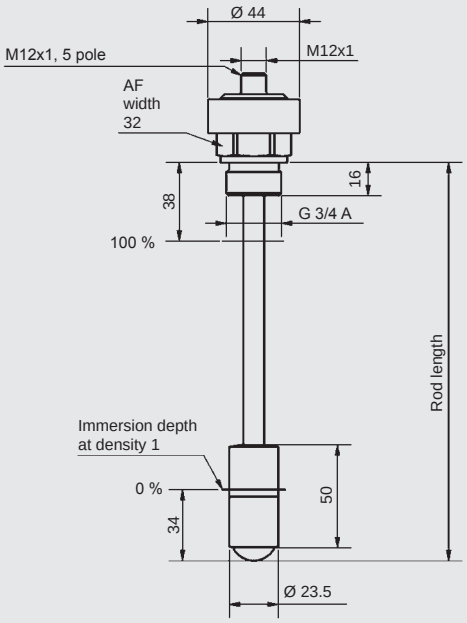

M12x1, 5 pole

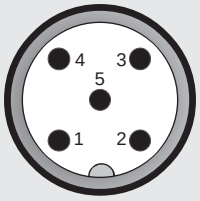

Pin	Signal	Description
1	n.c.	
2	$+U_B$	Supply +
3	0 V	Supply -
4	CAN_H	bus line dominant high
5	CAN_L	bus line dominant low

Model code:

HNT 1 1 2 8 – F11 – XXXX – 000

Mechanical connection
2 = G ¾ A ISO 1179-2

Electrical connection
8 = male M12x1, 5 pole

Output signal
F11 = CANopen

Rod length (physical) in mm
0250; 0280; 0370; 0410; 0520; 0730

Modification number
000 = standard

Accessories:
Appropriate accessories, such as mating connectors, can be found in the Accessories brochure.

Note:

The information in this brochure relates to the operating conditions and applications described.

For applications or operating conditions not described, please contact the relevant technical department.

Subject to technical modifications.

HYDAC ELECTRONIC GMBH
Hauptstraße 27, 66128 Saarbrücken
Germany
Telephone +49 (0)6897 509-01
Fax +49 (0)6897 509-1726
E-mail: electronic@hydac.com
Internet: www.hydac.com

Level Switch
ENS 3000

Capacitive | **Display**

Up to 4 switching outputs
Up to 2 analogue outputs
Optional temperature measurement

Description:

The ENS 3000 is an electronic level switch with integrated display. The instrument has 1, 2 or 4 switching outputs and an analogue output signal is available as an option.

In addition to the standard minimum and maximum switching signals, with the 4 switching output version it is possible to set additional warning signals to prevent problems such as tank overflow or aeration of the pump.

Using the device is easy, thanks to the menu-guided key operation, so adjusting the user-specific parameters takes little time.

The ENS 3000 can be used not only for oil but also for water; the type of fluid can be selected in an menu item.

One of the other advantages of the ENS 3000 is that no moving parts are used that come into contact with the fluid.

The main applications of the ENS 3000 are primarily in hydraulics, e.g. for fluid level monitoring of a tank.

The ENS 3000 is available in standard rod lengths of 250 mm, 410 mm, 520 mm and 730 mm. The instrument is also available with or without temperature probe.

When the device is used with temperature probe, the switching outputs can be individually assigned to the level or temperature variables.

Technical data:

Input data					
Measuring ranges	mm	170	290	390	590
Rod length	mm	250	410	520	730
Max. speed of change in fluid level	mm/s	40	60	80	100
Mechanical connection		Collar 22 mm for cutting ring fitting			
Parts in contact with fluid		Rod: Ceramic, coated			
Fluids[1]		Hydraulic oils (mineral based), synth. oils, fluids containing water			
Temperature					
Measuring range [2]		-25 .. +100 °C			
Output data					
Switching outputs		1; 2; 4 PNP transistor outputs Switching current: 1; 2 SP: max. 1.2 A per output 4 SP: max. 0.25 A per output Switching cycles: > 100 million			
Analogue output, permitted load resistance		1; 2 SP: 4 .. 20 mA load resist. max. 500 Ω 0 .. 10 V load resist. min. 1 kΩ 4 SP: 0 .. 10 V load resist. min. 1 kΩ			
Accuracy		Level: ≤ ± 2 % FS Temperature: ± 1.5 °C			
Temperature drift (enviroment)		≤ 0.0 15 % FS / °C			
Repeatability[3]		Level: ≤ ± 2 % FS Temperature: ≤ ± 1.5 °C			
Response time acc. to DIN EN 60751 (temperature probe)		t_{90} ~ 180 s			
Environmental conditions					
Ambient temperature range		0 .. +60 °C			
Storage temperature range		-40 .. +80 °C			
Fluid temperature range		0 .. +60 °C			
Max. tank pressure		0.5 bar (short-term 3 bar, t < 1 min)			
CE mark		EN 61000-6-1 / 2 / 3 / 4			
cULus mark[4]		Certificate no. E318391			
Vibration resistance acc. to DIN EN 60068-2-6 (0 .. 500 Hz)		≤ 5 g			
Shock resistance acc. to DIN EN 60068-2-27 (11 ms)		≤ 25 g			
Protection class acc. to DIN EN 60529[3]		IP 67			
Other data					
Supply voltage when applied acc. to UL specifications		9 .. 35 V DC without analogue output 18 .. 35 V DC with analogue output - limited energy - acc. to 9.3 UL 61010; Class 2; UL 1310/1585; LPS UL 60950			
Residual ripple of supply voltage		≤ 5 %			
Current consumption		≤ 2.470 A total ≤ 90 mA with inactive switching outputs and 2 analogue outputs			
Display		4-digit, LED, 7-segment, red, height of digits 7 mm			
Weight	g	180	220	250	300

Note: Reverse polarity protection of the supply voltage, overvoltage, override and short circuit protection are provided.
FS (**F**ull **S**cale) = relative to complete measuring range

[1] Other fluids on request
[2] Observe ambient temperature range
[3] Specified at calm, non-turbulent fluid
[4] Environmental conditions acc. to 1.4.2 UL 61010-1; C22.2 No. 61010-1
[5] With mounted mating connector in corresponding protection class

Setting options:

All settings available on the ENS 3000 are combined in two easy-to-navigate menus. In order to prevent unauthorised adjustment of the device, a programming lock can be set.

Setting ranges of the switch points and switch-back hystereses:

Fluid level switch point function

Rod length in cm	Measuring range in cm	Switch point in cm *	Hysteresis in cm *
25.0	17.0	0.3 .. 17.0	0.1 .. 16.8
41.0	29.0	0.5 .. 29.0	0.2 .. 28.7
52.0	39.0	0.6 .. 39.0	0.2 .. 38.6
73.0	59.0	0.9 .. 59.0	0.3 .. 58.4

The increment for all units is 0.1 cm.

Fluid level window function

Rod length in cm	Lower switch value in cm *	Upper switch value in cm *
25.0	0.3 .. 16.7	0.4 .. 16.8
41.0	0.5 .. 28.4	0.7 .. 28.7
52.0	0.6 .. 38.3	0.9 .. 38.6
73.0	0.9 .. 57.9	1.4 .. 58.4

The increment for all units is 0.1 cm.

Fluid level offset function

Rod length in cm	Measuring range in cm *	Offset in cm *
25.0	17.0	0 .. 68.0
41.0	29.0	0 .. 116.0
52.0	39.0	0 .. 156.0
73.0	59.0	0 .. 177.0

The increment for all units is 0.1 cm.

Temperature switch point function

Unit	Measuring range	Switch point	Hysteresis
°C	-25 .. +100	-23.0 .. +100.0	1.0 .. 123.5

The increment for all units is 0.5 °C.

Temperature window function

Unit	Lower switch value	Upper switch value
°C	-23.5 .. +97.5	-22.0 .. +98.5

The increment for all units is 0.5 °C.

* All ranges given in the table can be adjusted by the increments shown.

Additional functions:

- Switching mode of the swiching outputs adjustable (switch point function or window function)
- Switching direction of the switching outputs adjustable (N/C or N/O function)
- Switching outputs can be assigned to the fluid level or to the temperature
- Switch-on and switch-off delay adjustable from 0.00 .. 9999 seconds
- Choice of display (current level, current temperature, peak values, switch point 1, 2, 3, 4 or display off)
- Analogue output can be assigned to fluid level or temperature as required (depending on model)

Pin connections:

M12x1, 4 pole

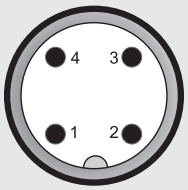

Pin	ENS 3X16-2	ENS 3X16-3
1	$+U_B$	$+U_B$
2	SP2	Analogue
3	0 V	0 V
4	SP1	SP1

M12x1, 5 pole

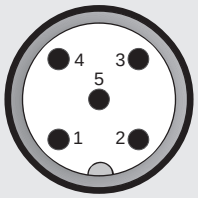

Pin	ENS 3X18-5
1	$+U_B$
2	Analogue
3	0 V
4	SP1
5	SP2

M12x1, 8 pole

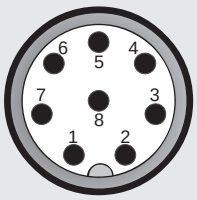

Pin	ENS 3X1P-8
1	$+U_B$
2	SP2
3	0 V
4	SP1
5	SP3
6	SP4
7	Analogue fluid level
8	Analogue temperature

Dimensions:

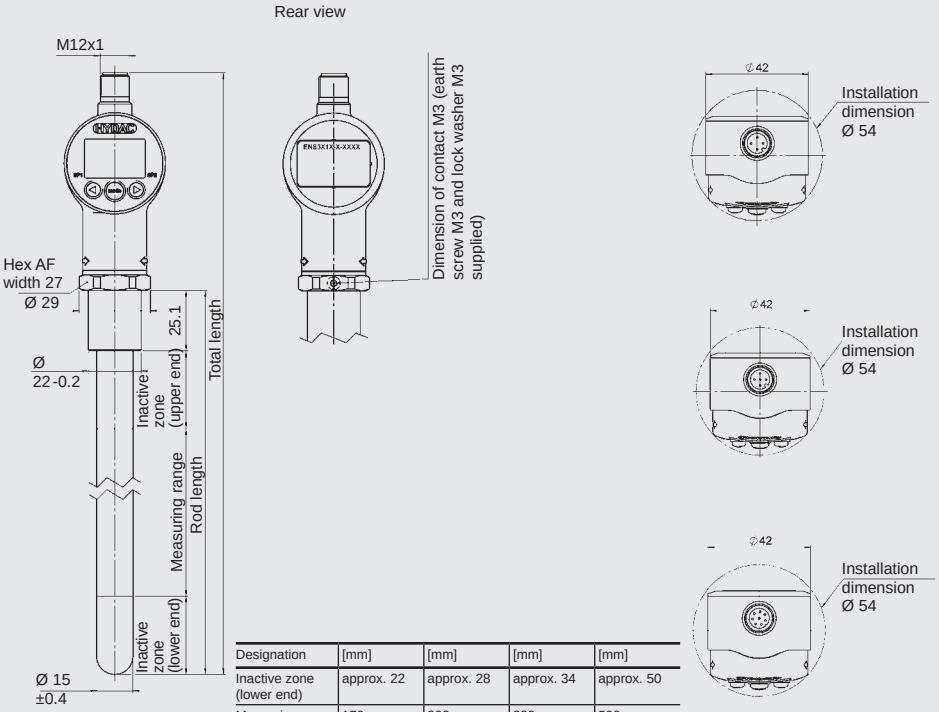

Designation	[mm]	[mm]	[mm]	[mm]
Inactive zone (lower end)	approx. 22	approx. 28	approx. 34	approx. 50
Measuring range	170	290	390	590
Rod length	250	410	520	730
Total length	340	500	610	820
Inactive zone (upper end)	approx. 33	approx. 67	approx. 71	approx. 65

Model code:

ENS 3 X 1 X – X – XXXX – 000 – K

Temperature probe
1 = with temperature probe
2 = without temperature probe

Mechanical connection
1 = 22 mm collar
for cutting ring fitting G22L

Electrical connection
6 = male M12x1, 4 pole
only possible on output models “2” and “3”
8 = male M12x1, 5 pole
only possible on output model “5”
P = Male M12x1, 8 pole
only possible on output model “8”

Output
2 = 2 switching outputs
only in conjunction with electrical connection type “6”
3 = 1 switching output and 1 analogue output
only in conjunction with electrical connection type “6”
5 = 2 switching outputs and 1 analogue output
only in conjunction with electrical connection type “8”
8 = 4 switching outputs and 2 analogue outputs
only in conjunction with electrical connection type “P”
and temperature probe “1”

Rod length (physical) in mm
0250; 0410; 0520; 0730

Modification number
000 = standard

Probe material
K = ceramic

Accessories:
Appropriate accessories, such as mating connectors, splash guards, etc. can be found in the Accessories brochure.

Note:

The information in this brochure relates to the operating conditions and applications described.

For applications or operating conditions not described, please contact the relevant technical department.

Subject to technical modifications.

HYDAC ELECTRONIC GMBH
Hauptstraße 27, 66128 Saarbrücken
Germany
Telephone +49 (0)6897 509-01
Fax +49 (0)6897 509-1726
E-mail: electronic@hydac.com
Internet: www.hydac.com

Level Switch
ENS 3000

Capacitive | **Display**

IO-Link
Optional temperature measurement

Description:

The ENS 3000 with IO-Link communication interface is an electronic level switch with integrated display. The instrument has a switching output and an additional output that can be configured as switching or analogue output (4 .. 20 mA or 0 .. 10 V). The ENS 3000 can be used not only for oil but also for water; and is available with or without temperature probe.

IO-Link is the communication between the sensor/actuator (IO-Link device) and an IO-Link master based on a point-to-point interface.

The advantages:
Process data, parameters and diagnostic information of the level switch can be transmitted via a standard cable (SDCI mode). The integrated LED display provides information on the operating mode and the switching statuses.

Simple exchange: the IO-Link master saves the parameters of the connected level switch and transmits them to the newly connected level switch when replaced. Thus, time-consuming new parameterisations will no longer be required.

If IO-Link is not used, the sensor still functions as a level switch with two switching outputs (SIO mode).

To create customer-specific small series or to duplicate sensor settings across the system, the sensor can also be easily adjusted outside the system to suit the particular application, with the HYDAC Programming Device HPG P1-000, the HYDAC Programming Adapter ZBE P1-000 or by means of the Portable Data Recorder HMG 4000.

Typical fields of application for ENS 3000 IO-Link are machine tools, handling and assembly automation, intralogistics or the packaging industry.

Technical data:

Input data					
Measuring ranges	mm	170	290	390	590
Rod length	mm	250	410	520	730
Max. speed of change in fluid level	mm/s	40	60	80	100
Mechanical connection		Collar 22 mm for cutting ring fitting			
Parts in contact with fluid		Rod: Ceramic, coated			
Fluids [1]		Hydraulic oils (mineral-based), synth. oils, fluids containing water			
Temperature					
Measuring range [2]		-25 .. +100 °C			
Output data					
Switching outputs		PNP transistor outputs Switching current: max. 250 mA per switching output			
Analogue output, permitted load resistance		Selectable: 4 .. 20 mA load resist. max. 500 Ω 0 .. 10 V load resist. min. 1 kΩ			
Accuracy		Level: ≤ ± 2 % FS Temperature: ± 1.5 °C			
Temperature drift (environment)		≤ 0.015 % FS / °C			
Repeatability [3]		Level: ≤ ± 2 % FS Temperature: ≤ ± 1.5 °C			
Response time acc. to DIN EN 60751 (temperature probe)		t_{90} ~180 s			
Environmental conditions					
Ambient temperature range		0 .. +60 °C			
Storage temperature range		-40 .. +80 °C			
Fluid temperature range		0 .. +60 °C			
Max. tank pressure		0.5 bar (short-term 3 bar, t < 1 min)			
CE mark		EN 61000-6-1 / 2 / 3 / 4			
cULus mark [4]		Certificate-No.: E318391			
Vibration resistance acc. to DIN EN 60068-2-6 (0 .. 500 Hz)		≤ 5 g			
Shock resistance acc. to DIN EN 60068-2-27 (11 ms)		≤ 25 g			
Protection class acc. to DIN EN 60529 [5]		IP 67			
IO-Link specific data					
IO-Link revision		V1.1 / support V1.0			
Transmission rate, baud rate [6]		38.4 kBaud (COM2)			
Minimum cycle time		20 ms			
Process data width		Version without temperature sensor: 16 Bit Version with temperature sensor: 32 Bit			
SIO mode supported		Yes			
M-sequence capability		PREOPERATE: TYPE_0 OPERATE: TYPE_2_2 (level) TYPE_2_V (level / temperature) ISDU: Supported			
IO Device Description (IODD) download at: https://ioddfinder.io-link.com/#/					
Other data					
Supply voltage		9 .. 35 V DC, if PIN 2 = SP2 18 .. 35 V DC, if PIN 2 = analogue output			
when applied acc. to UL specifications		- limited energy – acc. to 9.3 UL 61010; Class 2; UL 1310 / 1585; LPS UL 60950			
Residual ripple of supply voltage		≤ 5 %			
Current consumption		≤ 0.535 A with active switching outputs ≤ 35 mA with inactive switching outputs ≤ 55 mA with inactive switching output and analogue output			
Display		4-digit, LED, 7 segment, red, height of digits 7 mm			
Weight	g	180	220	250	300

Note: Reverse polarity protection of the supply voltage, overvoltage, override and short circuit protection are provided.
FS (**F**ull **S**cale) = relative to complete measuring range

[1] Other fluids on request
[2] Observe ambient temperature range
[3] Specified at calm, non-turbulent fluid
[4] Environmental conditions acc. to 1.4.2 UL 61010-1; C22.2 No. 61010-1
[5] With mounted mating connector in corresponding protection class
[6] Connection with unshielded standard sensor line possible up to a maximum line length of 20 m.

Setting options:

All terms and symbols used for setting the ENS 3000 as well as the menu structure comply with the specifications in the VDMA Standard for level switches.

Setting ranges for the switching outputs:

Measuring range/ rod length in cm	Lower limit of RP (FL) in cm	Upper limit of SP (FH) in cm
17.0 / 25.0	0.2	17.0
29.0 / 41.0	0.3	29.0
39.0 / 52.0	0.4	39.0
59.0 / 73.0	0.6	59.0

Measuring range/ rod length in cm	Min. difference betw. RP & SP and FL & FH in cm	Increment* in cm
17.0 / 25.0	0.2	0.1
29.0 / 41.0	0.3	0.1
39.0 / 52.0	0.4	0.1
59.0 / 73.0	0.6	0.1

Measuring range Temperature	Lower limit of RP (FL)	Upper limit of SP (FH)
-25 .. +100 °C	-23.5 °C	100.0 °C

Measuring range Temperature	Min. difference betw. RP and SP & FL and FH	Increment*
-25 .. +100 °C	1.5 °C	0.5 °C

* All ranges given in the table can be adjusted by the increments shown.

SP = switch point
RP = switch-back point
FL = level/temperature window lower value
FH = level/temperature window upper value

Additional functions:

- Switching mode of the swiching outputs adjustable (switch point function or window function)
- Switching direction of the switching outputs adjustable (N/C or N/O function)
- Switching outputs can be assigned to the fluid level or to the temperature
- Switch-on and switch-off delay adjustable from 0.00 .. 99.99 seconds
- Analogue output signal selectable 4 .. 20 mA or 0 .. 10 V
- Analogue output can be assigned to fluid level or temperature as required (depending on model)

Pin connections:

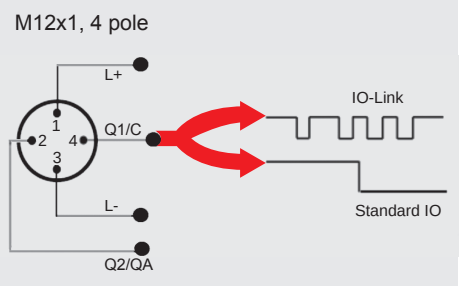

Pin	Signal	Description
1	L+	$+U_B$
2	Q2/QA	Switching output (SP2) / analogue output
3	L-	0 V
4	Q1/C	IO-Link communication / switching output (SP1)

Dimensions:

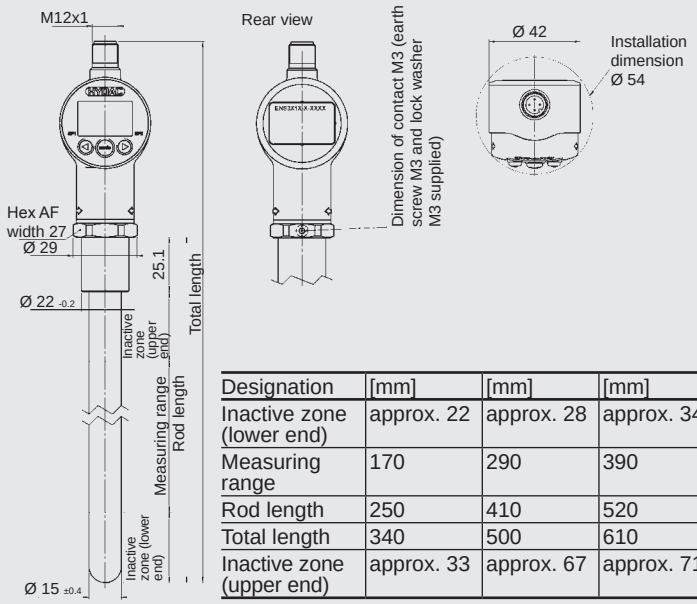

Designation	[mm]	[mm]	[mm]	[mm]
Inactive zone (lower end)	approx. 22	approx. 28	approx. 34	approx. 50
Measuring range	170	290	390	590
Rod length	250	410	520	730
Total length	340	500	610	820
Inactive zone (upper end)	approx. 33	approx. 67	approx. 71	approx. 65

Model code:

ENS 3 X 1 6 – F31 – XXXX – 000 – K

Temperature probe
1 = with temperature probe
2 = without temperature probe

Mechanical connection
1 = 22 mm collar for cutting ring fitting G22L

Electrical connection
6 = male M12x1, 4 pole
(mating connector not supplied)

Output
F31 = IO-Link interface

Rod length, physical
0250; 0410; 0520; 0730 mm

Modification number
000 = standard

Probe material
K = ceramic

Accessories:
Appropriate accessories, such as mating connectors, mechanical adapters, splash guards and programming units, can be found in the Accessories brochure.

Note:

The information in this brochure relates to the operating conditions and applications described.

For applications or operating conditions not described, please contact the relevant technical department.

Subject to technical modifications.

HYDAC ELECTRONIC GMBH
Hauptstraße 27, 66128 Saarbrücken
Germany
Telephone +49 (0)6897 509-01
Fax +49 (0)6897 509-1726
E-mail: electronic@hydac.com
Internet: www.hydac.com

Level Switch
HNS 3000

Magnetostrictive | **Display**

Up to 4 switching outputs
Up to 2 analogue outputs
Optional temperature measurement

Description:

The HNS 3000 is an electronic level switch with integrated display.
The float-based sensor for high-precision analogue monitoring of the fluid level has 1, 2 or 4 switching outputs and an analogue output signal is available as an option.

In addition to the standard minimum and maximum switching signals, with the 4 switching output version it is possible to set additional warning signals to prevent problems such as tank overflow or aeration of the pump.

Using the device is easy, thanks to the menu-guided key operation, so adjusting the user-specific parameters takes little time.

The main applications of the HNS 3000 are primarily in hydraulics, e.g. for fluid level monitoring of a tank.

The sensor is available in rod lengths of 250 .. 730 mm as standard. Rod lengths of up to 2500 mm are possible. The instrument is also available with or without temperature probe.

Depending on the application, several different floats are available, e.g. stainless steel for aggressive media or plastic.

When the device is used with temperature probe, the switching outputs can be individually assigned to the level or temperature variables.

Technical data:

Input data							
Measuring ranges	mm	178	208	298	338	448	658
Rod length [1]	mm	250	280	370	410	520	730
Max. speed of change in fluid level	No restrictions						
Mechanical connection	G ¾" ISO 1179-2						
Tightening torque, recommended	30 Nm						
Parts in contact with fluid	Rod: Stainless steel 1.4571 Float: PP (polypropylene); 0.6 kg/dm³ Seal: Seal ring DIN3869-27-FKM						
Fluids [2]	Hydraulic oils (mineral based), synth. oils, fluids containing water						
Temperature							
Measuring range [3]	-25 .. +100 °C						
Output data							
Switching outputs	1; 2; 4 PNP transistor outputs Switching current: 1; 2 SP: max. 1.2 A per output 4 SP: max. 0.25 A per output Switching cycles: > 100 million						
Analogue output, permitted load resistance	1; 2 SP: 4 .. 20 mA load resist. max. 500 Ω 0 .. 10 V load resist. min. 1 kΩ 4 SP: 0 .. 10 V load resist. min. 1 kΩ						
Accuracy	Level: ≤ ± 1.0 % FS Temperature: ± 1.5 °C						
Temperature drift (environment)	≤ 0.04 % FS / °C						
Repeatability [4]	Level: ≤ ± 1.0 % FS Temperature: ≤ ± 0.5 °C						
Response time acc. to DIN EN 60751 (temperature probe)	t_{90} ~100 s						
Environmental conditions							
Ambient temperature range	-25 .. +80 °C						
Storage temperature range	-40 .. +80 °C						
Fluid temperature range [5]	-40 .. +120 °C / -25 .. +120 °C						
Max. tank pressure	3 bar (short-term 10 bar, t < 1 min)						
CE mark	EN 61000-6-1 / 2 / 3 / 4						
Vibration resistance acc. to DIN EN 60068-2-6 (0 .. 500 Hz)	≤ 2 g						
Shock resistance acc. to DIN EN 60068-2-27 (11 ms)	≤ 20 g						
Protection class acc. to DIN EN 60529 [6]	IP67						
Other data							
Supply voltage	9 .. 35 V DC without analogue output 18 .. 35 V DC with analogue output						
Residual ripple of supply voltage	≤ 5 %						
Current consumption	≤ 2.470 A total ≤ 150 mA with inactive switching outputs and analogue outputs						
Display	4-digit, LED, 7-segment, red, height of digits 7 mm						
Weight	500 .. 1000 g (depending on length)						

Note: Reverse polarity protection of the supply voltage, overvoltage, override and short circuit protection are provided.
FS (**F**ull **S**cale) = relative to complete measuring range

[1] Other rod lengths on request
[2] Other fluids on request
[3] Observe ambient temperature range
[4] Specified at calm, non-turbulent fluid
[5] -25 °C with FKM seal, -40 °C on request
[6] With mounted mating connector in corresponding protection class

Setting options:

All settings available on the HNS 3000 are combined in two easy-to-navigate menus.

In order to prevent unauthorised adjustment of the device, a programming lock can be set.

Setting ranges of the switch points and switch-back hystereses:

Fluid level switch point function

Rod length in cm	Meas. range in cm	Switch point in cm *	Switch hysteresis in cm *
25.0	17.8	0.3 .. 17.8	0.1 .. 17.6
28.0	20.8	0.4 .. 20.8	0.2 .. 20.5
37.0	29.8	0.5 .. 29.8	0.2 .. 29.5
41.0	33.8	0.6 .. 33.8	0.2 .. 33.4
52.0	44.8	0.7 .. 44.8	0.3 .. 44.3
73.0	65.8	1.0 .. 65.8	0.4 .. 65.1

The increment for all units is 0.1 cm.

Fluid level window function

Rod length in cm	Lower switch value in cm *	Upper switch value in cm *
25.0	0.3 .. 17.4	0.4 .. 17.6
28.0	0.4 .. 20.4	0.5 .. 20.5
37.0	0.5 .. 29.2	0.7 .. 29.5
41.0	0.6 .. 33.2	0.8 .. 33.4
52.0	0.7 .. 44.0	1.0 .. 44.3
73.0	1.0 .. 64.6	1.5 .. 65.1

The increment for all units is 0.1 cm.

Fluid level offset function

Rod length in cm	Measuring range in cm	Offset in cm *
25.0	17.8	0.0 .. 71.2
28.0	20.8	0.0 .. 83.2
37.0	29.8	0.0 .. 119.2
41.0	33.8	0.0 .. 135.2
52.0	44.8	0.0 .. 179.2
73.0	65.8	0.0 .. 263.2

The increment for all units is 0.1 cm.

Temperature switch point function

Unit	Measuring range	Switch point	Hysteresis
°C	-25 .. +100	-23.0 .. +100.0	0.8 .. 123.6

The increment for all units is 0.2 °C.

Temperature window function

Unit	Lower switch value	Upper switch value
°C	-23.0 .. +97.8	-22.2 .. +98.6

The increment for all units is 0.2 °C.

* All ranges given in the table can be adjusted by the increments shown.

Additional functions:

- Switching mode of the swiching outputs adjustable (switch point function or window function)
- Switching direction of the switching outputs adjustable (N/C or N/O function)
- Switching outputs can be assigned to the fluid level or to the temperature
- Switch-on and switch-off delay adjustable from 0.00 .. 99.99 seconds
- Choice of display (current level, current temperature, peak values, switch point 1, 2, 3, 4 or display off)
- Analogue output can be assigned to fluid level or temperature as required (depending on model)

Pin connections:

M12x1, 4 pole

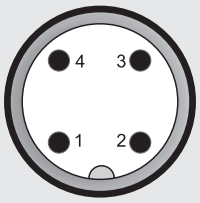

Pin	HNS 3X26-2	HNS 3X26-3
1	$+U_B$	$+U_B$
2	SP2	Analogue
3	0 V	0 V
4	SP1	SP1

M12x1, 5 pole

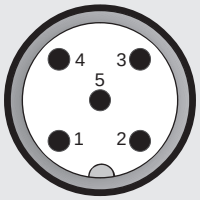

Pin	HNS 3X28-5
1	$+U_B$
2	Analogue
3	0 V
4	SP1
5	SP2

M12x1, 8 pole

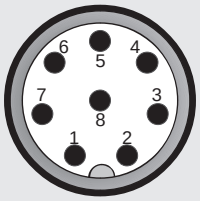

Pin	HNS 3X2P-8
1	$+U_B$
2	SP2
3	0 V
4	SP1
5	SP3
6	SP4
7	Analogue fluid level
8	Analogue temperature

Dimensions:

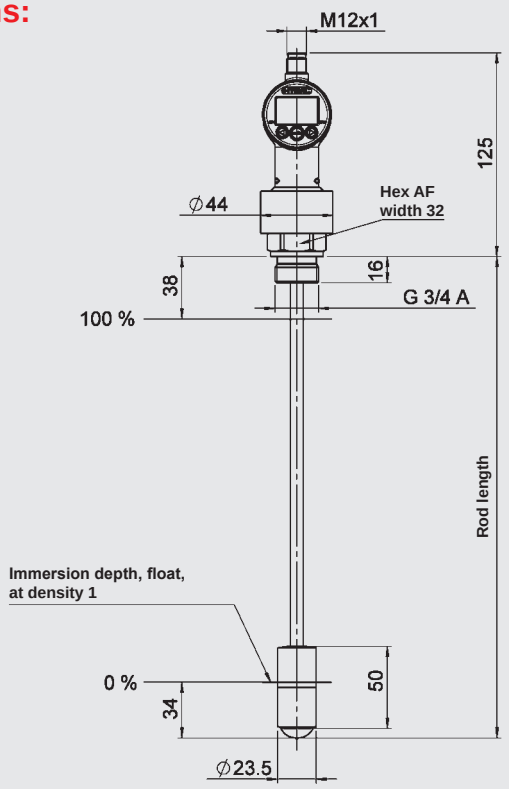

Model code:

HNS 3 X 2 X – X – XXXX – 000

Temperature probe
1 = with temperature probe
2 = without temperature probe

Mechanical connection
2 = G3/4 A ISO 1179-2

Electrical connection
6 = male M12x1, 4 pole
only possible on output models “2” and “3”
8 = male M12x1, 5 pole
only possible on output model “5”
P = male M12x1, 8 pole
only possible on output model “8”

Output
2 = 2 switching outputs
only in conjunction with electrical connection type “6”
3 = 1 switching output and 1 analogue output
only in conjunction with electrical connection type “6”
5 = 2 switching outputs and 1 analogue output
only in conjunction with electrical connection type “8”
8 = 4 switching outputs and 2 analogue outputs
only in conjunction with electrical connection type “P”
and temperature probe “1”

Rod length (physical) in mm
0250; 0280; 0370; 0410; 0520; 0730

Modification number
000 = standard

Accessories:
Appropriate accessories, such as mating connectors, splash guards, etc. can be found in the Accessories brochure.

Note:

The information in this brochure relates to the operating conditions and applications described.

For applications or operating conditions not described, please contact the relevant technical department.

Subject to technical modifications.

HYDAC ELECTRONIC GMBH
Hauptstraße 27, 66128 Saarbrücken
Germany
Telephone +49 (0)6897 509-01
Fax +49 (0)6897 509-1726
E-mail: electronic@hydac.com
Internet: www.hydac.com

Level Switch
HNS 3000

Magnetostrictive | **Display**

IO-Link
Optional temperature measurement

IO-Link

Description:

The HNS 3000 with IO-Link communication interface is an electronic level switch with integrated display. The instrument has a switching output and an additional output that can be configured as switching or analogue output (4 .. 20 mA or 0 .. 10 V) The HNS 3000 can be used not only for oil but also for water, and is available with or without temperature probe.

IO-Link is the communication between the sensor/actuator (IO-Link device) and an IO-Link master based on a point-to-point interface.

The advantages:
Process data, parameters and diagnostic information of the level switch can be transmitted via a standard cable (SDCI mode). The integrated LED display provides information on the operating mode and the switching statuses.

Simple exchange: the IO-Link master saves the parameters of the connected level switch and transmits them to the newly connected level switch when replaced. Thus, time-consuming new parameterisations will no longer be required.

If IO-Link is not used, the sensor still functions as a level switch with two switching outputs (SIO mode).

To create customer-specific small series or to duplicate sensor settings across the system, the sensor can also be easily adjusted outside the system to suit the particular application, with the HYDAC Programming Device HPG P1-000, the HYDAC Programming Adapter ZBE P1-000 or by means of the Portable Data Recorder HMG 4000.

Typical fields of application for HNS 3000 IO-Link are machine tools, handling and assembly automation, intralogistics or the packaging industry.

Technical data:

Input data							
Measuring ranges	mm	178	208	298	338	448	658
Rod length [1]	mm	250	280	370	410	520	730
Max. speed of change in the fluid level	No restrictions						
Mechanical connection	G ¾" ISO 1179-2						
Tightening torque, recommended	30 Nm						
Parts in contact with fluid	Rod: Stainless steel 1.4571 Float: PP (Polypropylene); 0.6 kg/dm³ Seal: Seal ring DIN 3869-27-FKM						
Fluids [2]	Hydraulic oils (mineral based), synth. oils, fluids containing water						
Temperature							
Measuring range [3]	-25 .. +100 °C						
Output data							
Switching outputs	PNP transistor outputs Switching current: max. 250 mA per switching output						
Analogue output, permitted load resistance	Selectable: 4 .. 20 mA load resist. max. 500 Ω 0 .. 10 V load resist. min. 1 kΩ						
Accuracy	Level: ≤ ± 1.0 % FS Temperature: ± 1.5 °C						
Temperature drift (environment)	≤ 0.04 % FS / °C						
Repeatability [4]	Level: ≤ ± 1.0 % FS Temperature: ≤ ± 0.5 °C						
Response time acc. to DIN EN 60751 (temperature probe)	t_{90} ~100 s						
Environmental conditions							
Ambient temperature range	-25 .. +80 °C						
Storage temperature range	-40 .. +80 °C						
Fluid temperature range [5]	-40 .. +120 °C / -25 .. +120 °C						
Max. tank pressure	3 bar (short-term 10 bar, t < 1 min)						
CE mark	EN 61000-6-1 / 2 / 3 / 4						
Vibration resistance acc. to DIN EN 60068-2-6 (0 .. 500 Hz)	≤ 2 g						
Shock resistance acc. to DIN EN 60068-2-27 (11 ms)	≤ 20 g						
Protection class acc. to DIN EN 60529 [6]	IP 67						
IO-Link specific data							
IO-Link revision	V1.1 / support V1.0						
Transmission rate, baud rate [7]	38.4 kBaud (COM2)						
Minimum cycle time	20 ms						
Process data width	Version without temperature sensor: 16 Bit Version with temperature sensor: 32 Bit						
SIO mode supported	Yes						
M-sequence capability	PREOPERATE: TYPE_0 OPERATE: TYPE_2_2 (level) TYPE_2_V (level / temperature) ISDU: Supported						
IO Device Description (IODD) download at: https://ioddfinder.io-link.com/#/							
Other data							
Supply voltage	9 .. 35 V DC if PIN 2 = SP2 18 .. 35 V DC if PIN 2 = analogue output						
Residual ripple of supply voltage	≤ 5 %						
Current consumption	≤ 0.535 A with active switching outputs ≤ 35 mA with inactive switching outputs ≤ 55 mA with inactive switching output and analogue output						
Display	4-digit, LED, 7 segment, red, height of digits 7 mm						
Weight	500 .. 1000 g (depending on length)						

Note: Reverse polarity protection of the supply voltage, overvoltage, override and short circuit protection are provided.
FS (**F**ull **S**cale) = relative to complete measuring range

[1] Other rod lengths on request
[2] Other fluids on request
[3] Observe ambient temperature range
[4] Specified at calm, non-turbulent fluid
[5] -25 °C with FKM seal, -40 °C on request
[6] With mounted mating connector in corresponding protection class
[7] Connection with unshielded standard sensor line possible up to a maximum line length of 20 m.

Setting options:

All terms and symbols used for setting the HNS 3000 as well as the menu structure comply with the specifications in the VDMA Standard for level switches.

Setting ranges for the switching outputs:

Measuring range/ rod length in cm	Lower limit of RP (FL) in cm	Upper limit of SP (FH) in cm
17.8 / 25.0	0.3	17.8
20.8 / 28.0	0.4	20.8
29.8 / 37.0	0.5	29.8
33.8 / 41.0	0.6	33.8
44.8 / 52.0	0.7	44.8
65.8 / 73.0	1.0	65.8

Measuring range/ rod length in cm	Min. difference betw. RP & SP and FL & FH in cm	Increment* in cm
17.8 / 25.0	0.1	0.1
20.8 / 28.0	0.2	0.1
29.8 / 37.0	0.2	0.1
33.8 / 41.0	0.2	0.1
44.8 / 52.0	0.3	0.1
65.8 / 73.0	0.4	0.1

Measuring range Temperature	Lower limit of RP (FL)	Upper limit of SP (FH)
-25 .. +100 °C	-23.5 °C	100.0 °C

Measuring range Temperature	Min. difference betw. RP and SP & FL and FH	Increment*
-25 .. +100 °C	1.5 °C	0.5 °C

* All ranges given in the table can be adjusted by the increments shown.

SP = switch point
RP = switch-back point
FL = level/temperature window lower value
FH = level/temperature window upper value

Additional functions:

- Switching mode of the swiching outputs adjustable (switch point function or window function)
- Switching direction of the switching outputs adjustable (N/C or N/O function)
- Switching outputs can be assigned to the fluid level or to the temperature
- Switch-on and switch-off delay adjustable from 0.00 .. 99.99 seconds
- Analogue output signal selectable 4 .. 20 mA or 0 .. 10 V
- Analogue output can be assigned to fluid level or temperature as required (depending on model)

Pin connections:

M12x1, 4 pole

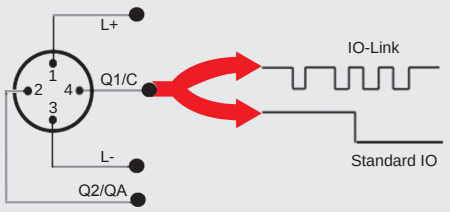

Pin	Signal	Description
1	L+	$+U_B$
2	Q2/QA	Switching output (SP2) / analogue output
3	L-	0 V
4	Q1/C	IO-Link communication / switching output (SP1)

Dimensions:

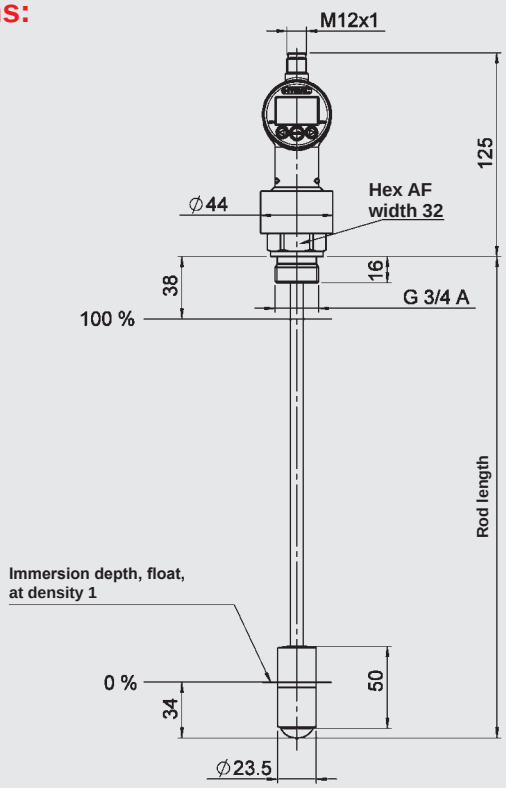

Model code:

HNS 3 X 2 6 – F31 – XXXX – 000

Temperature probe
1 = with temperature probe
2 = without temperature probe

Mechanical connection
2 = G 3/4 A ISO 1179-2

Electrical connection
6 = male M12x1, 4 pole
(mating connector not supplied)

Output
F31 = IO-Link interface

Rod length, physical
0250; 0280; 0370; 0410; 0520; 0730 mm

Modification number
000 = standard

Accessories:
Appropriate accessories, such as mating connectors, mechanical adapters, splash guards and programming units, can be found in the Accessories brochure.

Note:

The information in this brochure relates to the operating conditions and applications described.

For applications or operating conditions not described, please contact the relevant technical department.

Subject to technical modifications.

HYDAC ELECTRONIC GMBH
Hauptstr. 27, 66128 Saarbrücken
Germany
Telephone +49 (0)6897 509-01
Fax +49 (0)6897 509-1726
e-mail: electronic@hydac.com
Internet: www.hydac.com

Level Switch
HNS 526

Ultrasound | Display

Up to 2 switching outputs

VDMA

Description:

The level switch HNS 526 is a non-contact, highly compact sensor for fluid level measurement in stationary applications. By definition, its functional principle (measurement of sound transmission time) means that it operates with an extremely high resolution and sampling rate.

Thanks to the integrated temperature compensation, the sensors can be used in a wide temperature range.

The HNS 526 is available for measuring ranges up to 6400 mm and is obtainable in different signal output variants (2 switching outputs; 1 switching output plus 1 analogue output, either 4 .. 20 mA or 0 .. 10 V).

The sensor can be adjusted simply and conveniently via two push-buttons and a self-explanatory menu structure according to VDMA.

The actual fluid level can be displayed in a 3-digit digital display either in absolute value or in percent (selectable); 2 three-colour LEDs also indicate the operating status.

Technical data:

Input data						
Operating range	mm	280	480	1600	4000	6400
Blind zone	mm	0 .. 30	0 .. 85	0 .. 200	0 .. 350	0 .. 600
Maximum range	mm	350	600	2000	5000	8000
Resolution			≤ 0.18 mm			
Mechanical connection			M30x1.5			
Output data						
Switching outputs			1; 2 PNP transistor outputs Switching current: max. 200 mA per output Switching cycles: > 100 million			
Analogue output, permitted load resistance			Selectable: 4 .. 20 mA, R_{Lmax} = 100 Ω (U_B ≤ 20 V) R_{Lmax} = 500 Ω (U_B > 20 V) 0 .. 10 V, R_{Lmin} = 100 kΩ (U_B ≥ 20 V)			
Accuracy			≤ ± 1 % of the actual measured value			
Repeatability			± 0.15 % of the actual measured value			
Reaction time	ms	32	64	92	172	240
Environmental conditions						
Ambient temperature range			-25 °C .. +70 °C			
Storage temperature range			-40 °C .. +85 °C			
Max. tank pressure			Only for depressurised vessels			
CE mark			DIN EN 60947-5-2 DIN EN 60947-5-7			
Vibration resistance acc. to DIN EN 60068-2-6 (5 .. 2000 Hz)			≤ 2 g			
Shock resistance acc. to DIN EN 60068-2-27 (11 ms)			≤ 30 g			
Protection class acc. to DIN EN 60529[1)]			IP 67			
Other data						
Supply voltage			9 .. 30 V DC without analogue output 20 .. 30 V DC with analogue output			
Residual ripple of supply voltage			± 10 %			
Current consumption			≤ 80 mA			
Housing			Brass, nickel-plated; ultrasonic transducer with PEEK film			
Display			3-digit, LED-display, 2 three-colour-LEDs			
Weight	g	~ 150	~ 150	~ 150	~ 210	~ 270

Note: Reverse polarity protection of the supply voltage and load short circuit protection are provided.

[1)] With mounted mating connector in corresponding protection class

Setting options:

All the terms and symbols used for setting the HNS 526 as well as the menu structure comply with the specifications of the German Engineering Federation Standard (VDMA 24574-4) for level switches.

In order to prevent unauthorised adjustment of the device, a key-lock can be set.

Setting ranges of the switch points or switch-back points:

Switch point function distance and window function distance

Operating range	SP1, SP2, FH1, FH2 *	RP1, RP2, FL1, FL2*
280 mm	2 .. 32 cm 2 .. 13 inch	1 .. 31 cm 1 .. 12 inch
480 mm	2 .. 59 cm 2 .. 23 inch	1 .. 58 cm 1 .. 22 inch
1600 mm	2 .. 180 cm 2 .. 71 inch	1 .. 179 cm 1 .. 70 inch
4000 mm	2 .. 465 cm 2 .. 183 inch	1 .. 464 cm 1 .. 182 inch
6400 mm	2 .. 740 cm 2 .. 291 inch	1 .. 739 cm 1 .. 290 inch

Switch point function:
SP1, SP2 = switch point 1 or 2
RP1, RP2 = switch-back point 1 or 2

Window function.
FH1, FH2 = upper switch values 1 or 2
FL1, FL2 = lower switch values 1 or 2

* The increment for all devices is 1 cm or 1 inch

Recording ranges (for different objects):

The grey areas show the detection range for a very large reflector, e.g. a fluid surface, providing the sensor is ideally positioned. Outside the grey area, it is not possible to evaluate the ultrasonic reflections.

Operating range 280 mm:

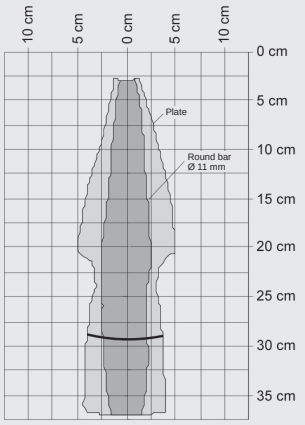

Operating range 480 mm:

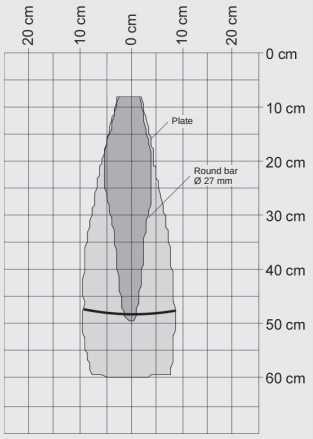

Operating range 1600 mm:

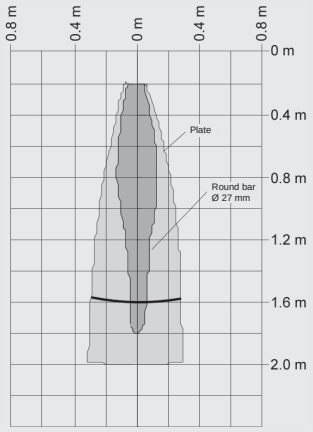

Operating range 4000 mm:

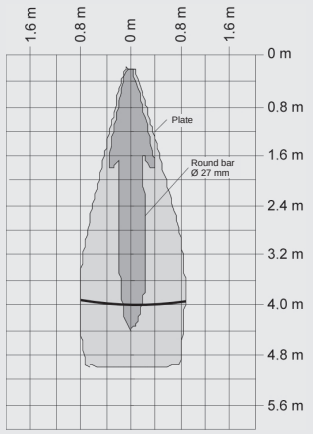

Operating range 6400 mm:

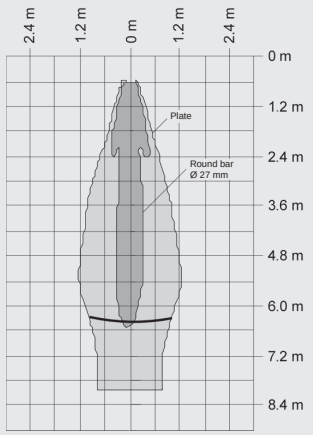

Additional functions:

- Switching mode of the swiching outputs adjustable (switch point function or window function)
- Switching direction of the switching outputs adjustable (N/C or N/O function)
- Switch-on delay adjustable from 0 .. 20 seconds
- Energy saving mode

Pin connections:

M12x4, 4 pole

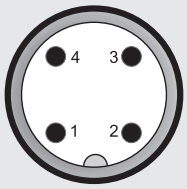

Pin	HNS 526-2	HNS 526-3
1	$+U_B$	$+U_B$
2	SP2	I/U
3	0 V	0 V
4	SP1	SP1

Dimensions:

Operating range:

280 mm

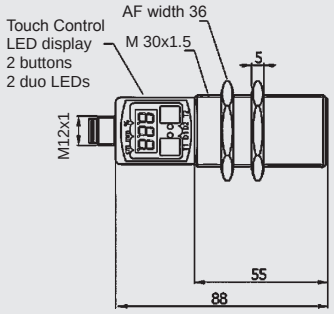

480 mm,1600 mm

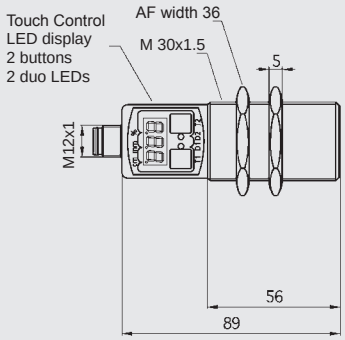

Operating range:

4000 mm

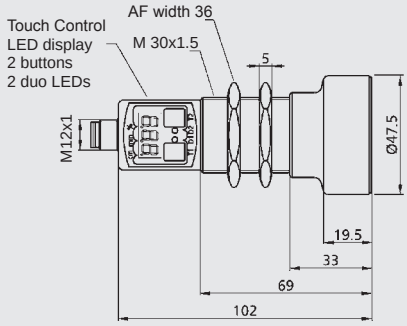

6400 mm

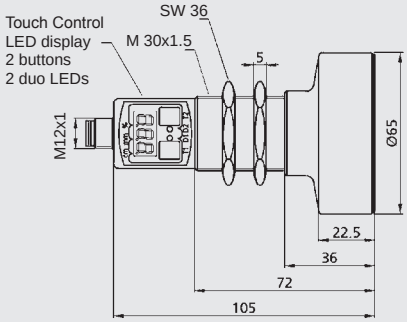

Model code:

HNS 5 2 6 - X - XXXX - 000 - F

Mechanical connection
2 = M30x1.5

Electrical connection
6 = male M12x1, 4 pole
(mating connector not supplied)

Output
2 = 2 switching outputs
3 = 1 switching output and 1 analogue output

Operating range in mm
0280; 0480; 1600, 4000, 6400

Modification number
000 = standard

Design, front face of sensor
F = foil

Accessories:
Appropriate accessories, such as mating connectors, can be found in the Accessories brochure.

Note:

The information in this brochure relates to the operating conditions and applications described.

For applications or operating conditions not described, please contact the relevant technical department.

Subject to technical modifications.

HYDAC ELECTRONIC GMBH
Hauptstraße 27, 66128 Saarbrücken
Germany
Telephone +49 (0)6897 509-01
Fax +49 (0)6897 509-1726
E-mail: electronic@hydac.com
Internet: www.hydac.com

FLOW RATE TRANSMITTERS / FLOW SWITCHES [7]

FLOW RATE AND FLOW TRANSMITTERS

					Page
GENERAL APPLICATIONS					
Turbine					
EVS 3100	Aluminium				367
EVS 3110	Stainless steel				369
Float					
HFT 2100					371
HFT 2500					375
POTENTIALLY EXPLOSIVE ATMOSPHERE					
Turbine					
HFT 3100		HART	Flameproof enclosure	ATEX, IECEx, CSA	379
HFT 3100		HART	Intrinsically safe	ATEX, IECEx	383

FLOW SWITCHES

GENERAL APPLICATIONS					
Float					
HFS 2100	Display				387
HFS 2500	Display				391
POTENTIALLY EXPLOSIVE ATMOSPHERE					
Float					
HFS 2100	Display		Intrinsically safe	ATEX	395
HFS 2500	Display		Intrinsically safe	ATEX	399

Flow Rate Transmitter EVS 3100

Turbine | High accuracy | Additional measuring connections

For oils / viscous fluids

Description:

The flow rate transmitters of the EVS 3100 series (aluminium series) are specially designed for use in hydraulic and other fluid power systems. They operate in accordance with the turbine principle, which means that the rpm of an impeller wheel rotating in the flow of the media is measured and converted into a 4 .. 20 mA analogue signal.

Two further G1/4 threaded holes in the turbine housing allow additional units to be connected, e.g. temperature and pressure sensors.

Technical data:

Input data	
Measuring ranges [1] and operating pressure	
1.2 .. 20.0 l/min	400 bar
6.0 .. 60.0 l/min	400 bar
15.0 .. 300.0 l/min	400 bar
40.0 .. 600.0 l/min	315 bar
Additional connection options	2 x G1/4 female threads for pressure and/or temperature sensors
Housing material	Aluminium
Output data	
Output signal, permitted load resistance	4 .. 20 mA, 2-conductor $R_{Lmax} = (U_B - 10\ V) / 20\ mA\ [k\Omega]$
Accuracy	≤ 2 % of the actual value
Environmental conditions	
Compensated temperature range	-20 .. +70 °C
Operating temperature range	-20 .. +70 °C
Storage temperature range	-40 .. +100 °C
Fluid temperature range	-20 .. +90 °C
CE mark	EN 61000-6-1 / 2 / 3 / 4
Protection class acc. to DIN EN 60529 [2]	IP 65 (Binder male connector 714 M18) IP 67 (M12x1 male connector)
Other data	
Measuring medium [3]	Hydraulic oils
Viscosity range	1 .. 100 cSt
Calibration viscosity	30 cSt
Supply voltage	10 .. 32 V DC
Residual ripple of supply voltage	≤ 5 %

Note: [1] Other measuring ranges on request.
[2] With mounted mating connector in corresponding protection class
[3] Other measuring media on request

Dimensions:

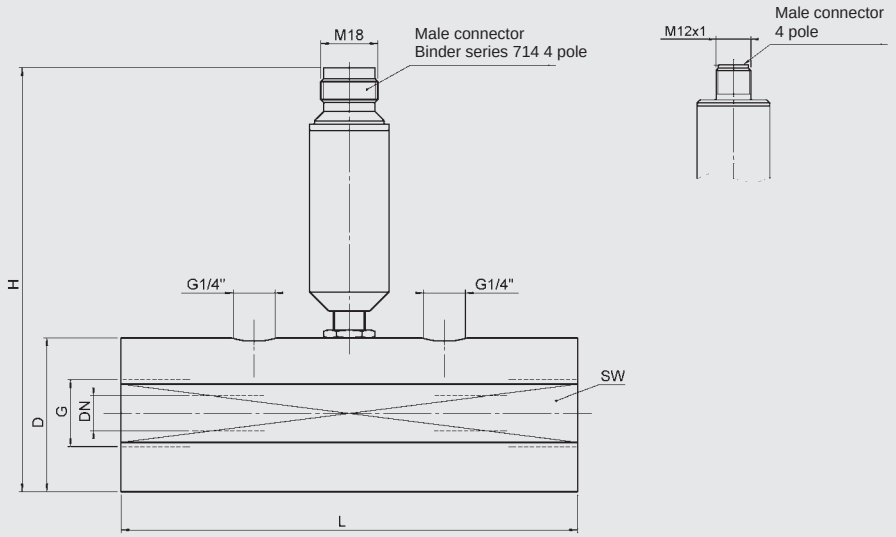

Model	Measuring range [l/min]	L [mm]	H [mm]	D / SW [mm]	G	Torque, recommended [Nm]	DN [mm]
EVS 310X-A-0020	1.2 .. 20	117	135	47 / 46	G¼"	60	7
EVS 310X-A-0060	6 .. 60	144	135	48.5 / 46	G½"	130	11
EVS 310X-A-0300	15 .. 300	155	150	63.5 / 60	G1¼"	500	22
EVS 310X-A-0600	40 .. 600	181	150	63.5 / 60	G1½"	600	30

Model code:

EVS 3 1 0 X – A – XXXX – 000

Housing material
0 = aluminium

Electrical connection
4 = male, 4 pole Binder series 714 M18
(mating connector not supplied)
6 = male M12x1, 4 pole
(mating connector not supplied)

Output signal
A = 4 .. 20 mA, 2-conductor (4 mA ≙ 0 l/min)

Measuring range
0020 = 1.2 .. 20 l/min
0060 = 6.0 .. 60 l/min
0300 = 15.0 .. 300 l/min
0600 = 40.0 .. 600 l/min

Modification number
000 = standard

Accessories:
Appropriate accessories, such as mating connectors, can be found in the Accessories brochure.

Pin connections:

Binder series 714 M18

Pin	EVS 3104-A
1	Reserved
2	Signal +
3	Signal -
4	Reserved

M12x1

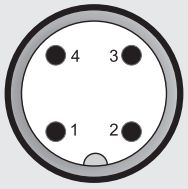

Pin	EVS 3106-A
1	Signal +
2	Reserved
3	Signal -
4	Reserved

Note:

The information in this brochure relates to the operating conditions and applications described.

For applications or operating conditions not described, please contact the relevant technical department.

Subject to technical modifications.

HYDAC ELECTRONIC GMBH
Hauptstraße 27, 66128 Saarbrücken
Germany
Telephone +49 (0)6897 509-01
Fax +49 (0)6897 509-1726
E-mail: electronic@hydac.com
Internet: www.hydac.com

Flow Rate Transmitter EVS 3110

Turbine	High accuracy	Additional measuring connections

For water-based media

Description:

The flow rate transmitters in the EVS 3110 series (stainless steel series) are specially designed for use in hydraulic and other fluid power systems. They operate in accordance with the turbine principle, which means that the rpm of an impeller wheel rotating in the flow of the media is measured and converted into a 4 .. 20 mA analogue signal.

In the EVS 3110 stainless steel series, the impeller has a carbide bearing and the resulting increased robustness also makes it suitable for use in pulsating, dynamic applications.

Two further G1/4 threaded holes in the turbine housing allow additional units to be connected, e.g. temperature and pressure sensors.

Technical data:

Input data	
Measuring ranges [1] and operating pressure	
1.2 .. 20.0 l/min	400 bar
6.0 .. 60.0 l/min	400 bar
15.0 .. 300.0 l/min	400 bar
40.0 .. 600.0 l/min	400 bar
Additional connection options	2 x G1/4 female threads for pressure and/or temperature sensors
Housing material	Stainless steel
Output data	
Output signal, permitted load resistance	4 .. 20 mA, 2-conductor $R_{Lmax} = (U_B - 10\ V) / 20\ mA\ [k\Omega]$
Accuracy	≤ 2 % of the actual value
Environmental conditions	
Compensated temperature range	-20 .. +70 °C
Operating temperature range	-20 .. +70 °C
Storage temperature range	-40 .. +100 °C
Fluid temperature range	-20 .. +90 °C
CE mark	EN 61000-6-1 / 2 / 3 / 4
Protection class acc. to DIN EN 60529 [2]	IP 65 (Binder male connector 714 M18) IP 67 (M12x1 male connector)
Other data	
Measuring medium [3]	Water-based media
Viscosity range	1 .. 100 cSt
Calibration viscosity	5 cSt
Supply voltage	10 .. 32 V DC
Residual ripple of supply voltage	≤ 5 %

Note: [1] Other measuring ranges on request.
[2] With mounted mating connector in corresponding protection class
[3] Other measuring media on request

Dimensions:

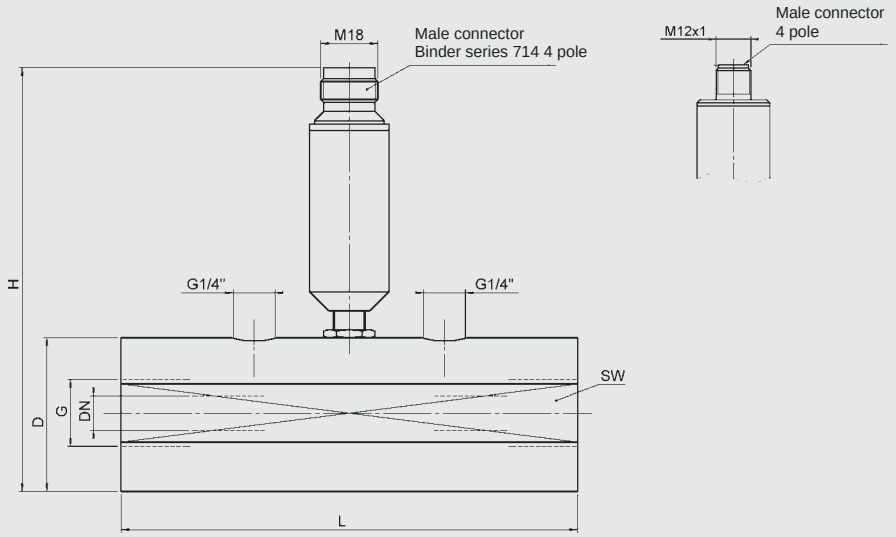

Model	Measuring range [l/min]	L [mm]	H [mm]	D / SW [mm]	G	Torque, recommended [Nm]	DN [mm]
EVS 311X-A-0020	1.2 .. 20	117	135	47 / 46	G¼"	60	7
EVS 311X-A-0060	6 .. 60	144	135	48.5 / 46	G½"	130	11
EVS 311X-A-0300	15 .. 300	155	150	63.5 / 60	G1¼"	500	22
EVS 311X-A-0600	40 .. 600	181	150	63.5 / 60	G1½"	600	30

Model code:

EVS 3 1 1 X – A – XXXX – 000

Housing material
1 = stainless steel

Electrical connection
4 = male, 4 pole Binder series 714 M18
(mating connector not supplied)
6 = male M12x1, 4 pole
(mating connector not supplied)

Output signal
A = 4 .. 20 mA, 2-conductor (4 mA ≙ 0 l/min)

Measuring range
0020 = 1.2 .. 20 l/min
0060 = 6.0 .. 60 l/min
0300 = 15.0 .. 300 l/min
0600 = 40.0 .. 600 l/min

Modification number
000 = standard

Accessories:
Appropriate accessories, such as mating connectors, can be found in the Accessories brochure.

Pin connections:

Binder series 714 M18

Pin	EVS 3114-A
1	Reserved
2	Signal +
3	Signal -
4	Reserved

M12x1

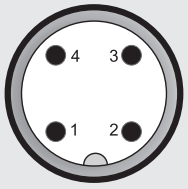

Pin	EVS 3116-A
1	Signal +
2	Reserved
3	Signal -
4	Reserved

Note:

The information in this brochure relates to the operating conditions and applications described.

For applications or operating conditions not described, please contact the relevant technical department.

Subject to technical modifications.

HYDAC ELECTRONIC GMBH
Hauptstraße 27, 66128 Saarbrücken
Germany
Telephone +49 (0)6897 509-01
Fax +49 (0)6897 509-1726
E-mail: electronic@hydac.com
Internet: www.hydac.com

Flow Transmitter HFT 2100

Float	Any installation position	30–600 cSt

For oils / viscous fluids

Description:

The HYDAC flow transmitters of the HFT 2100 series are based on a variable-area float principle.

Irrespective of the installation position, the measuring medium deflects a spring-loaded float in the direction of flow, depending on the flow rate. A Hall sensor detects the position of the float and is fitted to the outside of the device therefore separated from the fluid circuit. In proportion to the deflection of the float, the sensor produces an analogue signal which corresponds to the particular measuring range.

The device is calibrated for vertical installation and for an upwards flow direction. The measurement transmitter is designed to give reliable measurements within its accuracy range, even with changes in viscosity. The kinematic viscosity may vary between 30 and 600 cSt.

The fields of application include:

- Central lubrication systems
- Circulation oil lubrication systems
- Transformers
- Cooling systems and circuits
- Lubrication circuits
- Hydraulic systems
- Pumps
- Welding machines and laser plants
- Chemical industry
- Research and development

Technical data:

Input data		
Measuring ranges [l/min]	**Size 1**	**Size 2**
	0.5 .. 1.6	0.5 .. 1.5
	0.8 .. 3.0	1 .. 4
	2.0 .. 7.0	2 .. 8
		3 .. 10
		5 .. 15
		8 .. 24
		10 .. 30
		15 .. 45
		20 .. 60
		30 .. 90
		35 .. 110
Operating pressure Brass version [bar] Stainless steel version [bar]	 300 350	 250 300
Pressure drop [bar]	0.02 .. 0.2	0.02 .. 0.4
Mechanical connection	see dimensions	
Parts in contact with fluid		
Brass version	St. steel 1.4571; FKM [1]; brass nickel-pl.; brass; hard ferrite	
Stainless steel version	Stainless steel 1.4571; FKM [1]; hard ferrite	
Housing material		
Measuring parts	Brass (nickel-plated) or stainless steel 1.4571	
Transmitter	Brass, nickel-plated	
Output data		
Output signal, max. load resist. max. current	4 .. 20 mA, 3-conductor, R_{Lmax} ~ 500 Ω 0 .. 10 V, 3-conductor, I_{max} ~ 10 mA	
Accuracy [2]	≤ ± 10 % FS	
Repeatability	≤ 1 % FS max.	
Environmental conditions		
Operating temperature range	-20 .. +70 °C	
Fluid temperature range	-20 .. +70 °C	
Viscosity range	30 .. 600 cSt	
CE mark	Directive 2014 / 30 / EU	
Protection class acc. to DIN EN 60529 [3]	IP 67	
Other data		
Supply voltage	18 .. 30 V	
Power consumption	< 1 W	

Note: **FS** (**F**ull **S**cale) = relative to complete measuring range

[1] Other seal materials on request
[2] ± 5 % possible with calibration to a certain viscosity
[3] With mounted mating connector in corresponding protection class

Dimensions:

Size 1

Type [l/min]	Installation dimensions [mm]				Weight (approx.) [g]
	DN	SW	G	L	
0.5 .. 1.6	8	24	1/4"	98	610
	10	24	3/8"	119	660
	15	30	1/2" *)	90	560
0.8 .. 3.0	15	30	1/2"	90	560
2.0 .. 7.0					

*) Standard

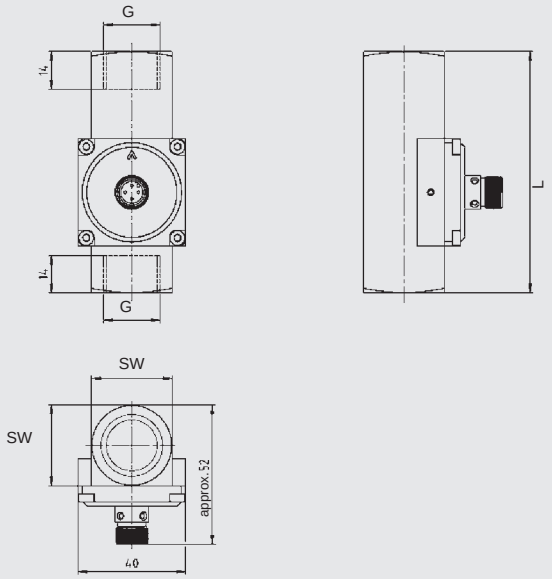

Size 2

Type [l/min]	Installation dimensions [mm]					Weight (approx.) [g]
	DN	SW	G	L	T	
0.5 .. 1.5	8	34	1/4"	152	10	1510
	15	34	1/2"	152	14	1435
1 to 4	20	34	3/4"	152	15	1350
	25	40	1" *)	130	17	1170
2 to 8	15	34	1/2"	152	14	1435
3 to 10	20	34	3/4"	152	15	1350
5 to 15	25	40	1" *)	130	17	1170
8 to 24						
10 to 30	20	34	3/4"	152	15	1350
15 to 45	25	40	1" *)	130	17	1170
20 to 60						
30 to 90	25	40	1"	130	17	1170
35 to 110						

*) Standard

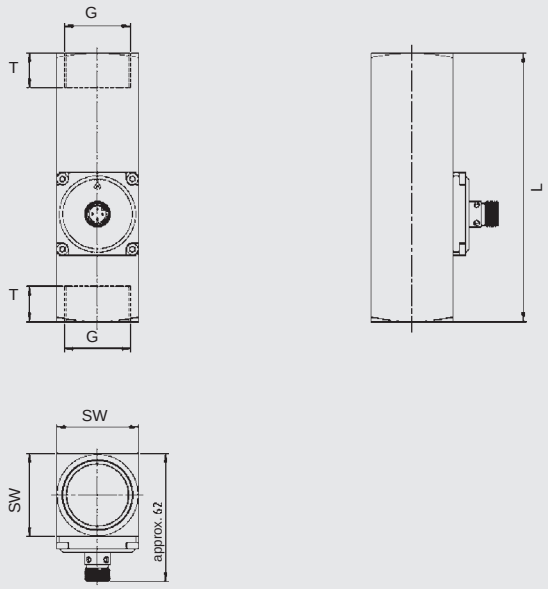

Model code:

HFT 2 1 X 6 – X – XXXX–XXXX – 7 – X – 0 – 000

Measuring principle
2 = variable area float

Measuring medium
1 = oils / viscous fluids

Mechanical connection [4] [5]
1 = 1/4"
2 = 3/8"
3 = 1/2"
4 = 3/4"
5 = 1"

Electrical connection
6 = male M12x1, 4 pole
(mating connector not supplied)

Output signal [6]
B = 0 .. 10 V, 3-conductor
C = 4 .. 20 mA, 3-conductor

Measuring ranges in l/min [5]
Oil 10 % -size 1-
00.5-01.6; 00.8-03.0; 02.0-07.0

Oil 10 % -Size 2-
00.5-01.5; 0001-0004; 0002-0008; 0003-0010;
0005-0015; 0008-0024; 0010-0030; 0015-0045;
0020-0060; 0030-0090; 0035-0110

Accuracy
7 = ≤ ± 10.0 % FS

Housing material
B = brass, nickel-plated
S = stainless steel

Mechanical indicator
0 = without indicator

Modification number
000 = standard

[4] Mechanical connection options depend on housing type (see Dimensions)
[5] Other types available on request
[6] 0 V or 4 mA resp. correspond to 0 l/min

Accessories:
Appropriate accessories, such as mating connectors, can be found in the Accessories brochure.

Pin connections:

M12x1

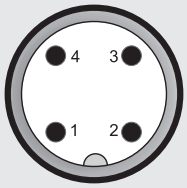

Pin	HFT 21X6-C	HFT 21X6-B
1	$+U_B$	$+U_B$
2	Reserved	Reserved
3	GND	GND
4	4 .. 20 mA	0 .. 10 V

Note:

The information in this brochure relates to the operating conditions and applications described.

For applications or operating conditions not described, please contact the relevant technical department.

Subject to technical modifications.

HYDAC ELECTRONIC GMBH
Hauptstr. 27, 66128 Saarbrücken
Germany
Telephone +49 (0)6897 509-01
Fax +49 (0)6897 509-1726
e-mail: electronic@hydac.com
Internet: www.hydac.com

Flow Transmitter HFT 2500

Float	Any installation position	Two accuracy classes

For water / water-based media

Description:

The HYDAC flow transmitters of the HFT 2500 series are based on a variable-area float principle.

Irrespective of the installation position, the measuring medium deflects a spring-loaded float in the direction of flow, depending on the flow rate. A Hall sensor detects the position of the float and is fitted to the outside of the device therefore separated from the fluid circuit. In proportion to the deflection of the float, the sensor produces an analogue signal which corresponds to the particular measuring range.

The device is calibrated for vertical installation and for an upwards flow direction.

Fields of application are to monitor flow rate in fluids (water / water-based) in the following areas, amongst others:

- Cooling systems and circuits
- Hydraulic systems
- Pumps
- Welding machines and laser plants
- Medical technology
- Pharmaceutical industry
- Chemical industry
- Research and development

Technical data:

Input data					
Measuring ranges [l/min]	**10 % accuracy**			**5 % accuracy**	
	Size 1	**Size 2**	**Size 3**	**Size 4**	
	0.005 .. 0.06	0.02 .. 0.2	10 .. 30	0.2 .. 4.0	8 .. 90
	0.04 .. 0.13	0.2 .. 0.6	15 .. 45	0.6 .. 5.0	5 .. 110
	0.1 .. 0.6	0.4 .. 1.8	20 .. 60	0.5 .. 8.0	10 .. 150
	0.2 .. 1.2	0.8 .. 3.2	30 .. 90	1 .. 14	35 .. 220
	0.4 .. 2.0	2 .. 7	60 .. 150	1 .. 28	35 .. 250
	0.5 .. 3.0	3 .. 13		2 .. 40	
	1.0 .. 5.0	4 .. 20		4 .. 55	
		8 .. 30		1 .. 70	
Operating pressure					
Brass version [bar]	300	300	250	200	
Stainless steel version [bar]	350	350	300	300	
Pressure drop [bar]	0.02 .. 0.2	0.02 .. 0.3	0.02 .. 0.4	0.02 .. 0.8	
Mechanical connection	see dimensions				
Parts in contact with fluid					
Brass version	Stainless steel 1.4571; NBR [1]; br. nickel-plated; br.; hard ferrite				
Stainless steel version	Stainless steel 1.4571; FKM [1]; hard ferrite				
Housing material					
Measuring parts	Brass (nickel-plated) or stainless steel 1.4571				
Transmitter	Brass, nickel-plated				
Output data					
Output signal, max. load resist.	4 .. 20 mA, 3-conductor, R_{Lmax} ~ 500 Ω				
max. current	0 .. 10 V, 3-conductor, I_{max} ~ 10 mA				
Accuracy	≤ ± 10 % / ≤ ± 5 % (size 4)				
Repeatability	1 % FS				
Environmental conditions					
Operating temperature range	-20 .. +70 °C				
Fluid temperature range	-20 .. +70 °C				
CE mark	Directive 2014 / 30 / EU				
Protection class acc. to DIN EN 60529 [2]	IP 67				
Other data					
Supply voltage	18 .. 30 V DC				
Power consumption	< 1 W				

Note: **FS** (**F**ull **S**cale) = relative to complete measuring range

[1] Other seal materials on request

[2] With mounted mating connector in corresponding protection class

Dimensions:

Type [l/min]	Installation dimensions [mm]							Weight (approx.) [g]
	SW	D	W	G	DN	T	L	
Size 1								
0.005 .. 0.06	17	17	39	1/4"	8	10	65	210
0.04 .. 0.13								
0.1 .. 0.6								
0.2 .. 1.2								
0.4 .. 2.0								
0.5 .. 3.0								
1.0 .. 5.0								

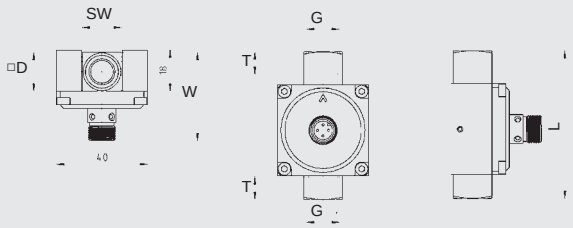

Size 2								
0.02 .. 0.2	30	30	62	1/2"	15	14	90	560
0.2 .. 0.6								
0.4 .. 1.8								
0.8 .. 3.2								
2.0 .. 7.0								
3.0 .. 13.0								
4.0 .. 20.0								
8.0 .. 30.0								

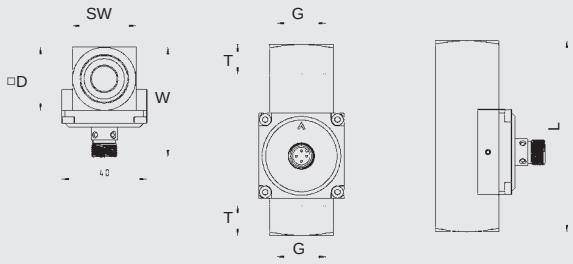

Size 3								
10 .. 30	34	40	62	3/4"	20	15	152	1240
15 .. 45	41			1" *)	25	17	130	1030
20 .. 60								
30 .. 90								
60 .. 150	40	40	62	1"	25	17	130	1050

*) Standard

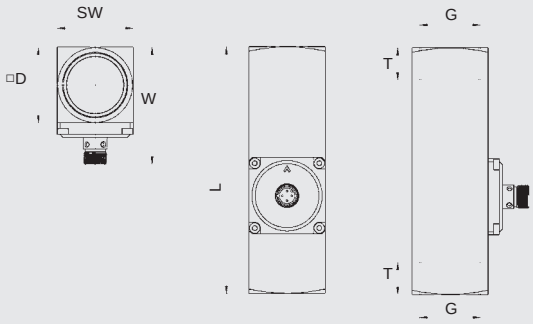

Size 4								
0.2 .. 4.0	27	40	52	1/4"	8	10	131	900
0.6 .. 5.0				3/8"	10	15		
0.5 .. 8.0				1/2"	15	14		
1 .. 14								
1 .. 28								
2 .. 40	27	40	52	1/2"	15	14	146	950
4 .. 55	32			3/4"	20	15	174	
1 .. 70	34	40	62	3/4"	20	15	152	1420
8 .. 90	40	40	62	1"	25	17	156	1120
5 .. 110								
10 .. 150	50	50	72	1 1/4"	32	20	200	2770
35 .. 220	50	50	72	1 1/4"	32	20	200	3020
35 .. 250	60	60	72	1 1/2"	40	20	200	3820

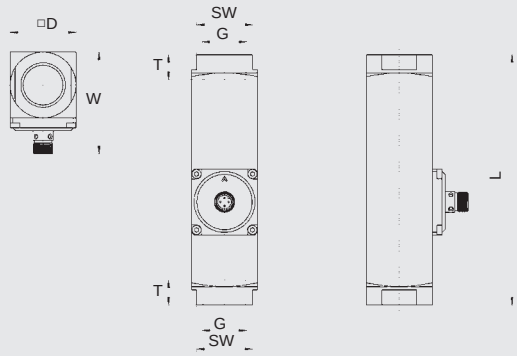

Model code:

HFT 2 5 X 6 – X – XXXX–XXXX – X – X – 0 – 000

Measuring principle
2 = variable area float

Measuring medium
5 = water / water-based

Mechanical connection [3)]
1 = 1/4"
2 = 3/8"
3 = 1/2"
4 = 3/4"
5 = 1"
6 = 1 1/4"
7 = 1 1/2"

Electrical connection
6 = male M12x1, 4 pole
(mating connector not supplied)

Output signal [4)]
B = 0 .. 10 V, 3-conductor
C = 4 .. 20 mA, 3-conductor

Measuring ranges in l/min
Size 1
.005-0.06; 0.04-0.13; 00.1-00.6; 00.2-01.2; 00.4-02.0;
00.5-03.0; 01.0-05.0

Size 2
0.02-00.2; 00.2-00.6; 00.4-01.8; 00.8-03.2; 02.0-07.0;
03.0-0013; 04.0-0020; 08.0-0030

Size 3
0010-0030; 0015-0045; 0020-0060; 0030-0090; 0060-0150
==========
Size 4
00.2-04.0; 00.6-05.0; 00.5-08.0; 01.0-0014; 01.0-0028;
02.0-0040; 04.0-0055;

01.0-0070; 08.0-0090; 0005-0110; 0010-0150;
0035-0220; 0035-0250

Accuracy
6 = ≤ ± 5.0 % FS (only for size "4")
7 = ≤ ± 10.0 % FS

Housing material
B = brass, nickel-plated
S = stainless steel

Mechanical indicator
0 = without indicator

Modification number
000 = standard

[3)] Mechanical connection options depend on housing type (see Dimensions)
[4)] 0 V or 4 mA resp. correspond to 0 l/min

Accessories:
Appropriate accessories, such as mating connectors, can be found in the Accessories brochure.

Pin connections:

M12x1

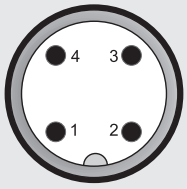

Pin	HFT 25X6-C	HFT 25X6-B
1	$+U_B$	$+U_B$
2	Reserved	Reserved
3	GND	GND
4	4 .. 20 mA	0 .. 10 V

Note:

The information in this brochure relates to the operating conditions and applications described.

For applications or operating conditions not described, please contact the relevant technical department.

Subject to technical modifications.

HYDAC ELECTRONIC GMBH
Hauptstraße 27, 66128 Saarbrücken
Germany
Telephone +49 (0)6897 509-01
Fax +49 (0)6897 509-1726
E-mail: electronic@hydac.com
Internet: www.hydac.com

Flow Rate Transmitter HFT 3100 Ex applications

Turbine | **High accuracy** | **Additional measuring connections**

Flameproof enclosure
ATEX, IECEx, CSA, triple approval
HART interface

Description:

HFT 3100 with HART interface is a compact flow rate transmitter with flameproof enclosure specially developed for applications in hydraulic systems and other fluid power systems.

The triple approval in accordance with ATEX, IECEx and CSA enables universal, worldwide utilisation of the devices in potentially explosive atmospheres.

The HFT 3100 operates in accordance with the turbine principle, which means that the rpm of an impeller wheel rotating in the flow of the media is measured and converted into a 4 .. 20 mA analogue signal. In addition with the analogue output of the measured value, digital communication is possible by means of the HART protocol.

Two additional G1/4 threaded bore holes in the turbine housing provide the flow rate transmitter with additional connection options, e.g. for temperature and pressure sensors.

Protection types and applications:

$_c$CSA$_{US}$ Explosionproof - Seal not required
Class I Group A, B, C, D, T6, T5
Class II Group E, F, G
Class III
Type 4

ATEX Flameproof
I M2 Ex d I Mb
II 2G Ex d IIC T6, T5 Gb
II 2D Ex tb IIIC T110 .. 120 °C Db

IECEx Flameproof
Ex d I Mb
Ex d IIC T6, T5 Gb
Ex tb IIIC T110 .. 120 °C Db

Technical data:

Input data		
Measuring range and operating pressure	1.2 .. 20.0 l/min	420 bar
	6.0 .. 60.0 l/min	420 bar
	15.0 .. 300.0 l/min	420 bar
	40.0 .. 600.0 l/min	420 bar
Additional connection options [1]	2x G 1/4 female threads for pressure or temperature sensors with relevant approvals	
Housing material	Stainless steel 1.4404	
Parts in contact with fluid	Stainless steel: 1.4404, 1.4460, tungsten carbide	
Output data		
Output signal, permitted load resistance	4 .. 20 mA, 2-conductor, with HART protocol $R_{Lmax} = (U_B - 12\ V) / 20\ mA\ [k\Omega]$ for HART communication min. 250 Ω	
	HART communication acc. to HART 7 specifications	
	HART Common Practice Commands, e.g. altering of measuring range limits (see table)	
Accuracy	≤ 2 % of the actual value	
Environmental conditions		
Operating/ambient temperature range [2]	T6, T110 °C T5	Ta = -40 .. +60 °C Ta = -40 .. +70 °C
Storage temperature range	-40 .. +100 °C	
Fluid temperature range [2]	T6, T110 °C T5	Ta = -40 .. +60 °C Ta = -40 .. +70 °C
CE mark	EN 61000-6-1 / 2 / 3 / 4, EN 60079-0 / 1 / 31	
Vibration resistance acc. to DIN EN 60068-2-6 at 10 .. 500 Hz	≤ 10 g	
Protection class acc. to DIN EN 60529 ISO 20653	IP 69	
Other data		
Measuring medium	Hydraulic oil, water based fluid	
Viscosity range	1 .. 100 cSt	
Calibration viscosity	30 cSt	
Supply voltage	12 .. 30 V DC	
Residual ripple of supply voltage	acc. to FSK Physical Layer Specification (HCF_SPEC_054)	
Current consumption	≤ 25 mA	
Weight		
HFT 31XX-F21-0020	2.5 kg	
HFT 31XX-F21-0060	4.0 kg	
HFT 31XX-F21-0300	5.7 kg	
HFT 31XX-F21-0600	7.0 kg	

Note: Reverse polarity protection of the supply voltage, overvoltage, override and short circuit protection are provided.

[1] Not for measuring ranges 1.2 .. 20 l/min
[2] T120 °C at Ta = -40 .. +70 °C with electrical connection single leads available

Measuring Range Limits:

By means of HART Common Practice Commands, you have the opportunity to adjust the following measuring range limits:

Lower measuring range limit		Upper measuring range limit		Measuring span	
min	max	min	max	min	max
0 % FS	75 % FS	25 % FS	100 % FS	25 % FS	100 % FS

Fields of application:

	Single leads Electrical connection “9”	Jacketed cable Electrical connection “G”
CSA **ATEX** **IECEx**	Explosionproof (seal not required) Flameproof Flameproof	
$_{c}$CSA$_{us}$	Class I Group A, B, C, D, T6, T5 Class II Group E, F, G Class III Type 4	
ATEX	I M2 Ex d I M II 2G Ex d IIC T6, T5 Gb	
	II 2D Ex tb IIIC T110 .. 120 °C Db	II 2D Ex tb IIIC T110 °C Db
IECEx	Ex d I Mb Ex d IIC T6, T5 Gb	
	Ex tb IIIC T110 .. 120 °C Db	Ex tb IIIC T110 °C Db

Model Code:

HFT 3 1 X X – F21 – XXXX – S - X - D - 000 (2m)

Mechanical process connection
1 = G 1/4" only for measuring range: 1.2 .. 20 l/min
3 = G 1/2" only for measuring range: 6.0 .. 60 l/min
6 = G 1 1/4" only for measuring range: 15 .. 300 l/min
7 = G 1 1/2" only for measuring range: 40 .. 600 l/min

Electrical connection
9 = 1/2-14 NPT Conduit male thread (single leads)
G = 1/2-14 NPT Conduit male thread (jacketed cable)

Output signal
F21 = 4 .. 20 mA, 2-conductor, with HART protocol (4 mA ≙ 0 l/min)

Measuring ranges
0020 = 1.2 .. 20 l/min
0060 = 6.0 .. 60 l/min
0300 = 15.0 .. 300 l/min
0600 = 40.0 .. 600 l/min

Housing material
S = stainless steel

Housing design
1 = without additional hole (measuring range 0020)
2 = with two additional female threads G 1/4 ISO 1179-2 (measuring ranges 0060, 0300, 0600)

Approval
D = **CSA** Explosionproof (seal not required)
ATEX Flameproof
IECEx Flameproof

Modification number
000 = standard

Cable length in m
Standard = 2 m

Dimensions:

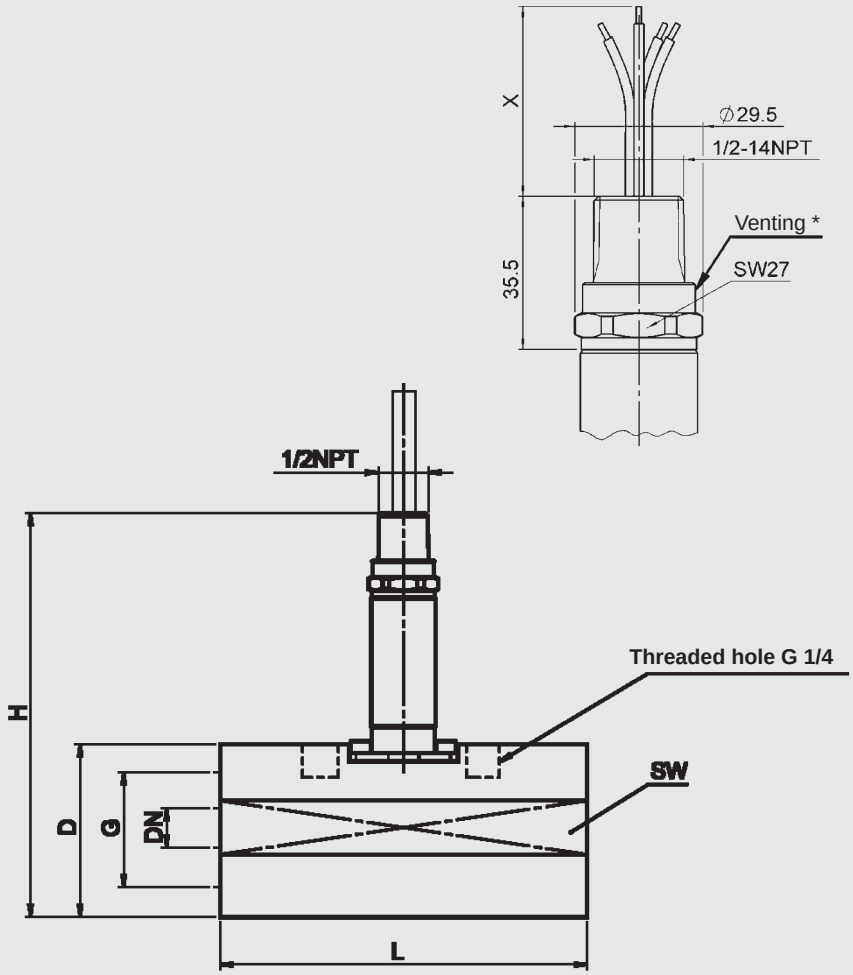

Without threaded holes for temperature and pressure sensors:

Model	Meas. range [l/min]	L [mm]	H [mm]	D / SW [mm]	G	Torque [Nm]	DN [mm]
HFT 31XX-F21-0020	1.2 .. 20	117	158	60 / 56	G¼"	35	7

With threaded holes for temperature and pressure sensors:

Model	Meas. range [l/min]	L [mm]	H [mm]	D / SW [mm]	G	Torque [Nm]	DN [mm]
HFT 31XX-F21-0060	6 .. 60	144	160	63 / 60	G½"	65	11
HFT 31XX-F21-0300	15 .. 300	155	173	75.5 / 72	G1¼"	240	22
HFT 31XX-F21-0600	40 .. 600	181	178	81 / 76	G1½"	290	30

Pin connections:

Conduit (single leads)

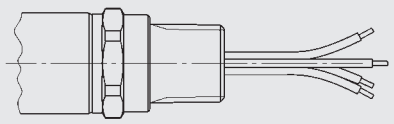

Lead	HFT 31x9
red	Signal +
black	Signal -
green-yellow	Housing

Conduit (jacketed cable)

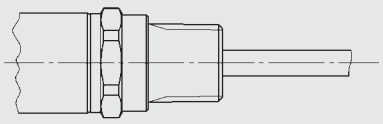

Lead	HFT 31xG
white	Signal -
brown	Signal +
green	n. c.
yellow	n. c.

Note:

The information in this brochure relates to the operating conditions and applications described.

For applications or operating conditions not described, please contact the relevant technical department.

Subject to technical modifications.

HYDAC ELECTRONIC GMBH
Hauptstraße 27, 66128 Saarbrücken
Germany
Telephone +49 (0)6897 509-01
Fax +49 (0)6897 509-1726
E-mail: electronic@hydac.com
Internet: www.hydac.com

HYDAC INTERNATIONAL

Flow Rate Transmitter HFT 3100 Ex applications

Turbine | **High accuracy** | **Additional measuring connections**

Intrinsically Safe, Dustproof enclosure
Non-Sparking
ATEX, IECEx, double approval
HART interface

Description:

The HFT 3100 with HART interface is an intrinsically safe compact flow rate transmitter for measuring flow rates in hydraulic systems. The double approval in accordance with ATEX and IECEx enables universal, almost worldwide utilisation of the devices in potentially explosive atmospheres.

The current flow is determined acc. to the turbine principle, by means of a highly accurate and robust sensor. In addition to the analogue 4 .. 20 mA output of the measured value, digital communication is possible by means of the HART protocol.

The main fields of application are in the oil & gas industry, gas turbines. The device is also used in mining applications as well as in locations with high dust contamination.

Two additional threaded bore holes in the turbine housing provide the flow rate transmitter with additional connection options for temperature and pressure sensors.

Protection types and applications:

ATEX

I M1	Ex ia	I	Ma
II 1G	Ex ia	IIC	T6,T5 Ga
II 1/2 G	Ex ia	IIC	T6,T5 Ga/Gb
II 2 G	Ex ia	IIC	T6,T5 Gb
II 1D	Ex ia	IIIC	T85 °C/T95 °C Da
II 1D	Ex ta	IIIC	T80/90/100 °C T_{500}90/T_{500}100/T_{500}110 °C Da
II 2D	Ex tb	IIIC	T80/T90/T100 °C Db
II 3G	Ex nA	IIC	T6, T5, T4 Gc
II 3G	Ex ic	IIC	T6, T5, T4 Gc
II 3D	Ex tc	IIIC	T80/T90/T100 °C Dc
II 3D	Ex ic	IIIC	T80/T90/T100 °C Dc

IECEx

Ex ia	I	Ma
Ex ia	IIC	T6,T5 Ga
Ex ia	IIC	T6,T5 Ga/Gb
Ex ia	IIC	T6,T5 Gb
Ex ia	IIIC	T85/T95 °C Da
Ex ta	IIIC	T80/T90/T100 °C T_{500}90/T_{500}100/T_{500}110 °C Da
Ex tb	IIIC	T80/T90/T100 °C Db
Ex nA	IIC	T6,T5,T4 Gc
Ex ic	IIC	T6,T5,T4 Gc
Ex tc	IIIC	T80/T90/T100 °C Dc
Ex ic	IIIC	T80/T90/T100 °C Dc

Technical data:

Input data		
Measuring range and operating pressure	1.2 .. 20.0 l/min	420 bar
	6.0 .. 60.0 l/min	420 bar
	15.0 .. 300.0 l/min	420 bar
	40.0 .. 600.0 l/min	420 bar
Additional connection options [1]	2x G 1/4 female threads for pressure or temperature sensors with relevant approvals	
Housing material	Stainless steel 1.4404	
Parts in contact with fluid	Stainless steel: 1.4404, 1.4460, tungsten carbide	
Output data		
Output signal, permitted load resistance	4 .. 20 mA, 2-conductor, with HART protocol R_{Lmax} = (U_B - 12 V) / 20 mA [kΩ] for HART communication min. 250 Ω	
	HART communication acc. to HART 7 specifications	
	HART Common Practice Commands, e.g. altering of measuring range limits (see table)	
Accuracy	≤ 2 % of the actual value	
Environmental conditions		
Operating/ambient temperature range	T6, T80/T85 °C, T_{500} 90 °C	Ta = -40 .. +60 °C
	T5, T90/T95 °C, T_{500} 100 °C	Ta = -40 .. +70 °C
	T100 °C, T_{500} 110 °C	Ta = -40 .. +80 °C
	T4	Ta = -40 .. +85 °C
Storage temperature range	-40 .. +100 °C	
Fluid temperature range	T6, T80, T85 °C, T_{500} 90 °C	Ta = -40 .. +60 °C
	T5, T90, T95 °C, T_{500} 100 °C	Ta = -40 .. +70 °C
	T100 °C, T_{500} 110 °C	Ta = -40 .. +80 °C
	T4	Ta = -40 .. +85 °C
CE mark	EN 61000-6-1 / 2 / 3 / 4, EN 60079-0 / 11 / 15 / 26 / 31, EN 50303	
Vibration resistance acc. to DIN EN 60068-2-6 at 10 .. 500 Hz	≤ 10 g	
Protection class acc. to DIN EN 60529 [2]	IP 67	
Relevant data for Ex applications	**Ex ia, ic**	**Ex nA, ta, tb, tc**
Supply voltage	Ui = 12 .. 28 V DC	12 .. 28 V DC
Max. input current	Ii = 100 mA	
Max. input power	Pi = 0.7 W	Max. power consumption ≤ 1 W
Connection capacitance of the sensor	Ci ≤ 22 nF	
Inductance of the sensor	Li = 0 mH	
Insulation voltage	50 V AC, with integrated overvoltage protection acc. to EN 61000-6-2	
Other data		
Measuring medium	Hydraulic oil, water based fluid	
Viscosity range	1 .. 100 cSt	
Calibration viscosity	30 cSt	
Residual ripple of supply voltage	Acc. to FSK Physical Layer Specification (HCF_SPEC_054)	
Current consumption	≤ 25 mA	
Weight		
HFT 311X-F21-0020	2.5 kg	
HFT 311X-F21-0060	4.0 kg	
HFT 311X-F21-0300	5.7 kg	
HFT 311X-F21-0600	7.0 kg	

Note: Reverse polarity protection of the supply voltage, overvoltage, override and short circuit protection are provided.

[1] Not for measuring ranges 1.2 .. 20 l/min
[2] With mounted mating connector in corresponding protection class

Measuring Range Limits:

By means of HART Common Practice Commands, you have the opportunity to adjust the following measuring range limits:

Lower measuring range limit		Upper measuring range limit		Measuring span	
min	max	min	max	min	max
0 % FS	75 % FS	25 % FS	100 % FS	25 % FS	100 % FS

Fields of application:

Code no. for use in model code	1			9	A	C
ATEX DEKRA 13ATEX0031X DEKRA 13ATEX0032	I M1 Ex ia I Ma	II 1G Ex ia IIC T6,T5 Ga II 1/2G Ex ia IIC T6,T5 Ga/Gb II 1D Ex ia IIIC T85/T95 °C Da	II 2G Ex ia IIC T6,T5 Gb	II 3G Ex nA IIC T6,T5 Gc	II 1D Ex ta IIIC T80/T90 °C T_{500}90/T_{500}100 °C Da II 2D Ex tb IIIC T80/T90 °C Db	II 3G Ex ic IIC T6,T5 Gc II 3D Ex ic IIIC T80/T90 °C Dc
IECEx DEK 14.0011X	Ex ia I Ma	Ex ia IIC T6,T5 Ga Ex ia IIC T6,T5 Ga/Gb Ex ia IIIC T85/T95 °C Da	Ex ia IIC T6,T5 Gb	Ex nA IIC T6,T5 Gc	Ex ta IIIC T80/T90 °C T_{500}90/T_{500}100 °C Da Ex tb IIIC T80/T90 °C Db	Ex ic IIC T6,T5 Gc Ex ic IIIC T80/T90 °C Dc
Application fields	Mining Protection type: intrinsically safe ia with barrier	Gases/conductive dust Protection type: intrinsically safe ia with barrier	Gases Protection type: intrinsically safe ia with barrier	Gases Protection type: non-sparking nA	Conductive dust Protection type: dustproof enclosure	Gases/conductive dust Protection type: Intrinsically safe ic with barrier

Instruments for other protection types and zones (see cover) are available upon request.

Model code:

HFT 3 1 X X – F21 – XXXX – S – X-ENX-000

Mechanical process connection
1 = G 1/4" only for measuring range: 1.2 .. 20 l/min
3 = G 1/2" only for measuring range: 6.0 .. 60 l/min
6 = G 1 1/4" only for measuring range: 15 .. 300 l/min
7 = G 1 1/2" only for measuring range: 40 .. 600 l/min

Electrical connection
6 = male M12x1, 4 pole (mating connector not supplied)

Output signal
F21 = 4 .. 20 mA, 2-conductor, with HART protocol (4 mA ≙ 0 l/min)

Measuring ranges
0020 = 1.2 .. 20 l/min
0060 = 6.0 .. 60 l/min
0300 = 15.0 .. 300 l/min
0600 = 40.0 .. 600 l/min

Housing material
S = stainless steel

Housing design
1 = without additional hole (measuring range 0020)
2 = with two additional female threads G 1/4 ISO 1179-2 (measuring ranges 0060, 0300, 0600)

Approval
E = ATEX and IECEx

Insulation voltage
N = 50 V AC to housing

Protection types and applications (code)

	ATEX		IECEx
1 =	I M1	Ex ia I Ma	Ex ia I Ma
	II 1G	Ex ia IIC T6, T5 Ga	Ex ia IIC T6, T5 Ga
	II 1/2 G	Ex ia IIC T6, T5 Ga/Gb	Ex ia IIC T6, T5 Ga/Gb
	II 2 G	Ex ia IIC T6, T5 Gb	Ex ia IIC T6, T5 Gb
	II 1D	Ex ia IIIC T85/T95 °C Da	Ex ia IIC T85/T95 °C Da
9 =	II 3G	Ex nA IIC T6, T5 Gc	Ex nA IIC T6, T5 Gc
	Only in conjunction with impact protection metal safety sleeve (see dimensions)		
A =	II 1D	Ex ta IIIC T80/T90 °C Da T_{500}90/T_{500}100 °C Da	Ex ta IIIC T80/T90 °C T_{500}90/T_{500}100 °C Da
	II 2D	Ex tb IIIC T80/T90 °C Db	Ex tb IIIC T80/T90 °C Db
	Only in conjunction with impact protection metal safety sleeve (see dimensions)		
C =	II 3G	Ex ic IIC T6, T5 Gc	Ex ic IIC T6, T5 Gc
	II 3D	Ex ic IIIC T80/T90 °C Dc	Ex ic IIIC T80/T90 °C Dc

Modification number
000 = standard

Dimensions:

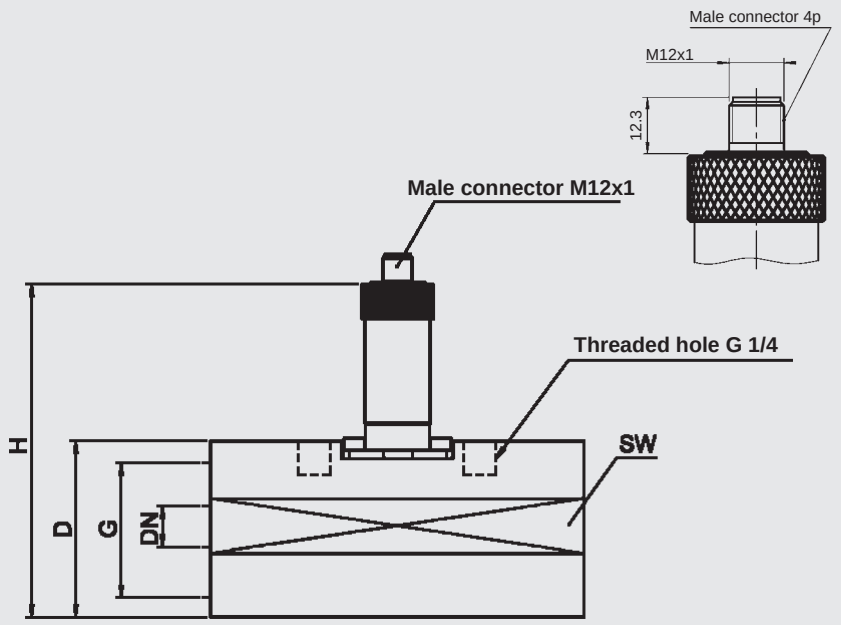

Without threaded holes for temperature and pressure sensors:

Model	Meas. range [l/min]	L [mm]	H [mm]	D / SW [mm]	G	Torque [Nm]	DN [mm]
HFT 31XX-F21-0020	1.2 .. 20	117	158	60 / 56	G¼"	35	7

With threaded holes for temperature and pressure sensors:

Model	Meas. range [l/min]	L [mm]	H [mm]	D / SW [mm]	G	Torque [Nm]	DN [mm]
HFT 31XX-F21-0060	6 .. 60	144	160	63 / 60	G½"	65	11
HFT 31XX-F21-0300	15 .. 300	155	173	75.5 / 72	G1¼"	240	22
HFT 31XX-F21-0600	40 .. 600	181	178	81 / 76	G1½"	290	30

With impact protection metal safety sleeve:

Protection types and applications: (code): 9, A

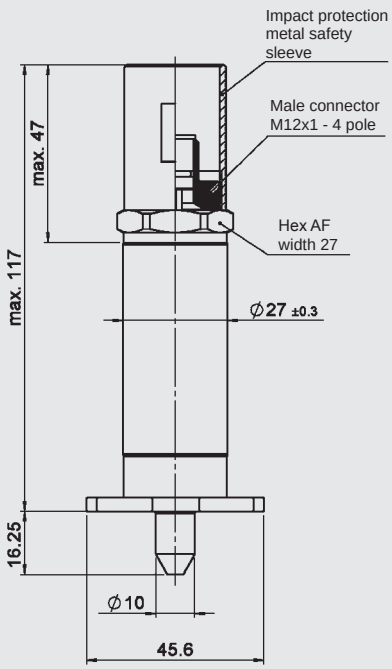

The impact protection metal safety sleeve is included in delivery. A straight mating connector is required for electrical connection; e.g. mating connector M12x1, 4 pole, straight, with 3 m shielded cable: ZBE 06S-03, Part no. 6098243

Pin connections:

M12x1

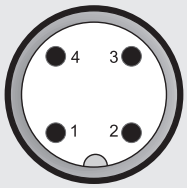

Pin	HFT 31x6-F21
1	Signal +
2	n.c.
3	Signal -
4	n.c.

Note:

The information in this brochure relates to the operating conditions and applications described.

For applications or operating conditions not described, please contact the relevant technical department.

Subject to technical modifications.

HYDAC ELECTRONIC GMBH
Hauptstraße 27, 66128 Saarbrücken
Germany
Telephone +49 (0)6897 509-01
Fax +49 (0)6897 509-1726
E-mail: electronic@hydac.com
Internet: www.hydac.com

Flow Switch
HFS 2100

Float	Any installation position	30–600 cSt

For oils / viscous fluids

Description:

The HYDAC flow switches of the HFS 2100 series are based on a variable area float principle.

The measuring medium deflects a spring-loaded float in the direction of flow, depending on the flow rate. A reed contact is fitted outside of the device, therefore separated from the fluid circuit. When the magnet inside the float reaches the pre-set position, the reed contact will switch.

To protect it from external influences, the reed contact is encapsulated in a housing designed to allow steplessly variable adjustment. The devices are designed to be capable of monitoring threshold values reliably, even when the viscosity fluctuates. The kinematic viscosity may vary between 30 and 600 cSt.

The main fields of application are:

- Central lubrication systems
- Circulation oil lubrication systems
- Transformers
- Cooling systems and circuits
- Lubrication circuits
- Hydraulic systems
- Pumps
- Welding machines and laser plants
- Chemical industry
- Research and development

Technical data:

Input data		
Measuring ranges [l/min]	**Size 1**	**Size 2**
	0.5 .. 1.6	0.5 .. 1.5
	0.8 .. 3.0	1 .. 4
	2.0 .. 7.0	2 .. 8
		3 .. 10
		5 .. 15
		8 .. 24
		10 .. 30
		15 .. 45
		20 .. 60
		30 .. 90
		35 .. 110
Operating pressure		
Brass version [bar]	300	250
Stainless steel version [bar]	350	300
Pressure drop [bar]	0.02 .. 0.2	0.02 .. 0.4
Mechanical connection	see dimensions	
Parts in contact with fluid		
Brass version	St. steel 1.4571; FKM [1]; brass nickel-pl.; brass; hard ferrite	
Stainless steel version	Stainless steel 1.4571; FKM [1]; hard ferrite	
Housing material	Brass (nickel-plated) or stainless steel 1.4571	
Output data		
Switching outputs [2]	1 or 2 reed contacts normally open or change-over type	
Accuracy	≤ ± 10 % FS	
Repeatability	2 % FS max.	
Switching capacity		
Change-over contact [3]	max.	max.
Male connector EN 175301-803	250 V / 1.5 A / 50 VA	250 V / 1.5 A / 50 VA
Male connector M12x1	125 V / 1.5 A / 50 VA	250 V / 1.5 A / 50 VA
N/O contact	max.	max.
Male connector EN 175301-803	230 V / 3 A / 60 VA	250 V / 3 A / 100 VA
Male connector M12x1	125 V / 3 A / 60 VA	250 V / 3 A / 100 VA
Environmental conditions		
Operating temperature range	-20 .. +70 °C	
Fluid temperature range		
Male connector EN 175301-803	-20 .. +120 °C (optional -20 .. +160 °C)	
Male connector M12x1	-20 .. +85 °C	
Viscosity range	30 .. 600 cSt	
CE mark	Directive 2014 / 35 / EU Directive 2014 / 30 / EU	
Protection class acc. to DIN EN 60529 [4]	IP 65	

Note: **FS** (**F**ull **S**cale) = relative to complete measuring range

[1] Other seal materials on request
[2] The contact opens / switches when the flow falls below the set switch point.
[3] Minimum load 3 VA
[4] With mounted mating connector in corresponding protection class

Dimensions without indicator:

OIL -size 1- without indicator

Type [l/min]	Installation dimensions [mm]				Weight (approx.) [g]
	DN	SW	G	L	
0.5 .. 1.6	8	24	1/4"	98	400
	10	24	3/8"	118.6	450
	15	27	1/2" *)	90	350
0.8 .. 3.0	15	27	1/2"	90	350
2.0 .. 7.0					

*) Standard

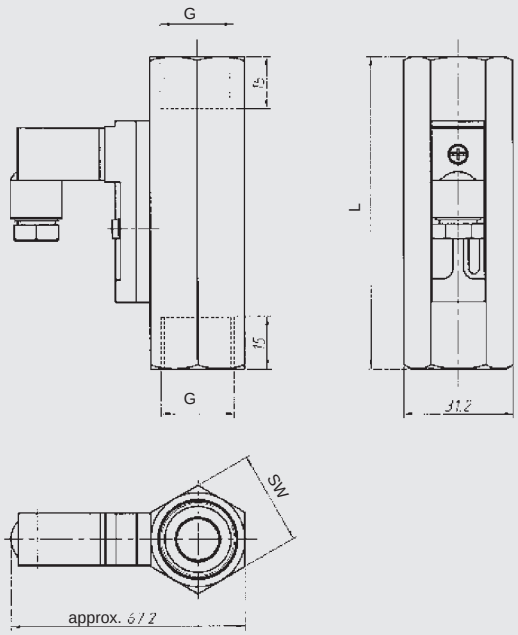

OIL -size 2- without indicator

Type [l/min]	Installation dimensions [mm]					Weight (approx.) [g]
	DN	SW	G	L	T	
0.5 .. 1.5	8	34	1/4"	152	10	1500
	15	34	1/2"	152	14	1425
1 .. 4	20	34	3/4"	152	15	1340
	25	40	1" *)	130	17	1160
2 .. 8	15	34	1/2"	152	14	1425
3 .. 10	20	34	3/4"	152	15	1340
5 .. 15	25	40	1" *)	130	17	1160
8 .. 24						
10 .. 30	20	34	3/4"	152	15	1340
15 .. 45	25	40	1" *)	130	17	1160
20 .. 60						
30 .. 90	25	40	1"	130	17	1160
35 .. 110						

*) Standard

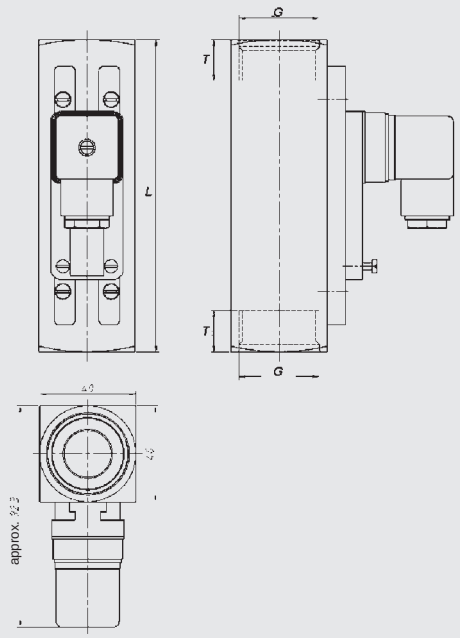

7

Dimensions with indicator:

OIL -size 1- with indicator

Type [l/min]	Installation dimensions [mm]				Weight (approx.) [g]
	DN	SW	G	L	
0.5 .. 1.6	15	30	1/2"	90	570
0.8 .. 3.0					
2.0 .. 7.0					

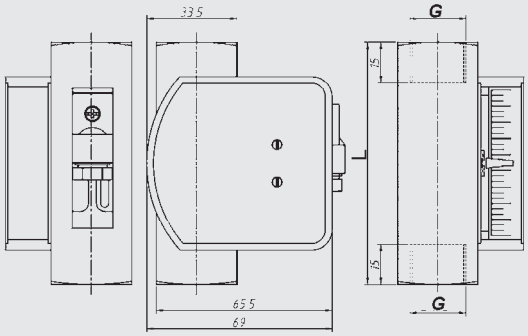

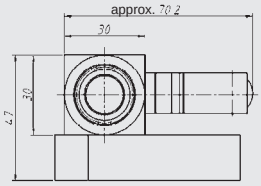

OIL -size 2- with indicator

Type [l/min]	Installation dimensions [mm]					Weight (approx.) [g]
	DN	SW	G	L	T	
0.5 .. 1.5	8	34	1/4"	152	10	1550
	15	34	1/2"	152	14	1475
1 .. 4	20	34	3/4"	152	15	1390
	25	40	1"*)	130	17	1210
2 .. 8	15	34	1/2"	152	14	1475
3 .. 10	20	34	3/4"	152	15	1390
5 .. 15	25	40	1"*)	130	17	1210
8 .. 24						
10 .. 30	20	34	3/4"	152	15	1390
15 .. 45	25	40	1"*)	130	17	1210
20 .. 60						
30 .. 90	25	40	1"	130	17	1210
35 .. 110						

*) Standard

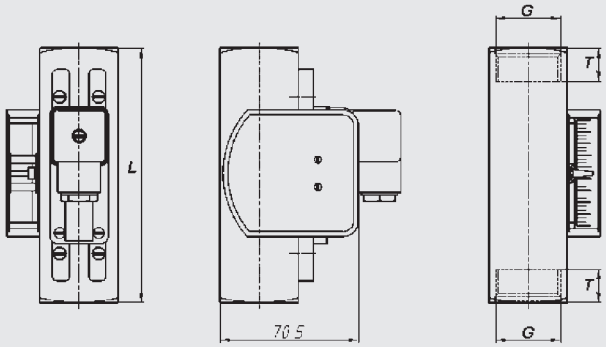

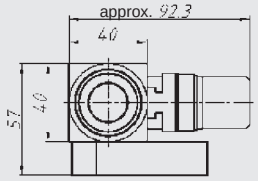

Model code:

HFS 2 1 X X – XX – XXXX–XXXX – 7 – X – X – 000

Measuring principle
2 = variable area float

Measuring medium
1 = oils / viscous fluids

Mechanical connection [5) 6)]
1 = 1/4"
2 = 3/8"
3 = 1/2"
4 = 3/4"
5 = 1"

Electrical connection
5 = male EN175301-803,
3 pole + PE
(mating connector supplied)
6 = male M12x1, 4 pole
(mating connector not supplied)

Switching contacts [7)]
1S = 1 N/O contact
2S = 2 N/O contacts
1W = 1 change-over contact
2W = 2 change-over contacts

Switching ranges in l/min [6)]
Oil 10 % -size 1-
00.5-01.6; 00.8-03.0; 02.0-07.0

Oil 10 % -size 2-
00.5-01.5; 0001-0004; 0002-0008; 0003-0010;
0005-0015; 0008-0024; 0010-0030; 0015-0045;
0020-0060; 0030-0090; 0035-0110

Accuracy
7 = ≤ ± 10.0 % FS

Housing material
B = brass, nickel-plated
S = stainless steel

Mechanical indicator
0 = without indicator
1 = with indicator

Modification number
000 = standard

[5)] Mechanical connection options depend on housing type (see Dimensions)
[6)] Other types available on request
[7)] When the model with 2 switching contacts is selected, the second switching contact is fitted on the side of the instrument as standard.

Accessories:
Appropriate accessories, such as mating connectors, can be found in the Accessories brochure.

Pin connections:

EN175301-803

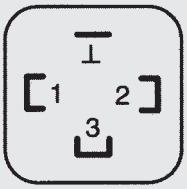

Pin	HFS 21X5-XS	HFS 21X5-XW
1	Centre	Centre
2	N/O contact	N/C contact
3	n.c.	N/O contact
⊥	n.c.	n.c.

M12x1

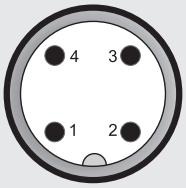

Pin	HFS 21X6-XS	HFS 21X6-XW
1	Centre	Centre
2	n.c.	N/C contact
3	n.c.	n.c.
4	N/O contact	N/O contact

Note:

The information in this brochure relates to the operating conditions and applications described.

For applications or operating conditions not described, please contact the relevant technical department.

Subject to technical modifications.

HYDAC ELECTRONIC GMBH
Hauptstr. 27, 66128 Saarbrücken
Germany
Telephone +49 (0)6897 509-01
Fax +49 (0)6897 509-1726
e-mail: electronic@hydac.com
Internet: www.hydac.com

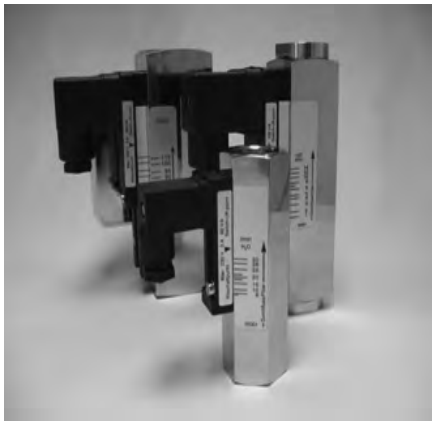

Flow Switch
HFS 2500

Float	Any installation position	Two accuracy classes

For water / water-based media

Description:

The HYDAC flow switches of the HFS 2500 series are based on a variable area float principle.

The measuring medium deflects a spring-loaded float in the direction of flow, depending on the flow rate. A reed contact is fitted outside of the device, therefore separated from the fluid circuit. When the magnet inside the float reaches the pre-set position, the reed contact will switch.

To protect it from external influences, the reed contact is encapsulated in a housing designed to allow steplessly variable adjustment.

The instruments in the HFS 2500 series are available in two versions, with 5 % accuracy and with 10 % accuracy.

Fields of application are to monitor flow rate in fluids (water / water-based) in the following areas, amongst others:

- Cooling systems and circuits
- Hydraulic systems
- Pumps
- Welding machines and laser plants
- Medical technology
- Pharmaceutical industry
- Chemical industry
- Research and development

Technical data:

Input data					
Measuring ranges [l/min]	**5 % accuracy**		**10 % accuracy**		
			Size 1	**Size 2**	**Size 3**
	0.2 .. 4.0	8 .. 90	0.005 .. 0.06	0.02 .. 0.2	10 .. 30
	0.6 .. 5.0	5 .. 110	0.04 .. 0.13	0.2 .. 0.6	15 .. 45
	0.5 .. 8.0	10 .. 150	0.1 .. 0.6	0.4 .. 1.8	20 .. 60
	1 .. 14	35 .. 220	0.2 .. 1.2	0.8 .. 3.2	30 .. 90
	1 .. 28	35 .. 250	0.4 .. 2.0	2 .. 7	60 .. 150
	2 .. 40		0.5 .. 3.0	3 .. 13	
	4 .. 55		1.0 .. 5.0	4 .. 20	
	1 .. 70			8 .. 30	
Operating pressure					
Brass version [bar]	200		300	300	250
Stainless steel version [bar]	300		350	350	300
Pressure drop [bar]	0.02 .. 0.8		0.02 .. 0.2	0.02 .. 0.3	0.02 .. 0.4
Mechanical connection	see dimensions				
Parts in contact with fluid Brass version Stainless steel version	 Stainl. steel 1.4571; NBR [1]; brass (nickel-pl.); brass; hard ferrite Stainless steel 1.4571; FKM [1]; hard ferrite				
Housing material	Brass (nickel-plated) or stainless steel 1.4571				
Output data					
Switching outputs [2]	1 or 2 reed contacts Normally open or change-over type [2]				
Accuracy	≤ ± 5 % or ≤ ± 10 % FS				
Repeatability	2 % FS max.				
Switching capacity					
Change-over contact [3] Male connector EN175301-803	max. - 250 V - 1.5 A - 50 VA		max. - 150 V AC/DC - 1 A - 20 VA	max. - 250 V - 1.5 A - 50 VA	max. - 250 V - 1.5 A - 50 VA
Male connector M12x1	max. - 250 V - 1.5 A - 50 VA		max. - 125 V AC/DC - 1 A - 20 VA	max. - 125 V - 1.5 A - 50 VA	max. - 250 V - 1.5 A - 50 VA
N/O contact Male connector EN175301-803	max. - 250 V - 3 A - 100 VA		max. - 140 V AC - 0.7 A - 20 VA - 200 V DC - 1 A - 20 VA	max. - 230 V - 3 A - 60 VA	max. - 250 V - 3 A - 100 VA
Male connector M12x1	max. - 250 V - 3 A - 100 VA		max. - 125 V AC - 0.7 A - 20 VA - 125 V DC - 1 A - 20 VA	max. - 125 V - 3 A - 60 VA	max. - 250 V - 3 A - 100 VA
Environmental conditions					
Operating temperature range	-20 .. +70 °C				
Fluid temperature range Male connector EN175301-803 Male connector M12x1	 -20 .. +100 °C (optional -20 .. +160 °C) -20 .. +85 °C				
CE mark	Directive 2014/35/EU Directive 2014/30/EU				
Protection class acc. to DIN EN 60529 [4]	IP 65				

Note: **FS** (**F**ull **S**cale) = relative to complete measuring range

[1] Other seal materials on request
[2] The contact opens / switches when the flow falls below the set switch point.
[3] Minimum load 3 VA
[4] With mounted mating connector in corresponding protection class

Dimensions without indicator:

Type [l/min]	Installation dimensions [mm]							Weight (approx.) [g]
	SW	D	W	G	DN	T	L	
Water 5 % accuracy								
0.2 .. 4.0	27	30	88	1/4" 3/8" 1/2"	8 10 15	10 15 14	131	850
0.6 .. 5.0								
0.5 .. 8.0								
1 .. 14								
1 .. 28								
2 .. 40	27 32	30	88	1/2" 3/4"	15 20	14 15	146 174	900
4 .. 55								
1 .. 70	34 40	40 40	98 98	3/4" 1"	20 25	15 17	152 156	1400 1100
8 .. 90								
5 .. 110								
10 .. 150	50	50	108	1 1/4"	32	20	200	2750
35 .. 220	50	50	108	1 1/4"	32	20	200	3000
35 .. 250	60	60	116	1 1/2"	40	20	200	3800

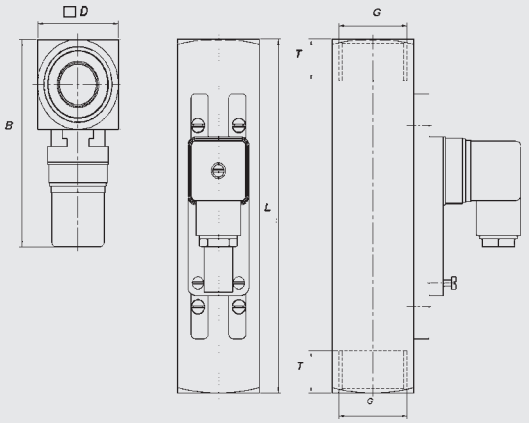

Water 10 % accuracy -size 1-

0.005 .. 0.06	17	17	57	1/4"	8	10	65	140
0.04 .. 0.13								
0.1 .. 0.6								
0.2 .. 1.2								
0.4 .. 2.0								
0.5 .. 3.0								
1.0 .. 5.0								

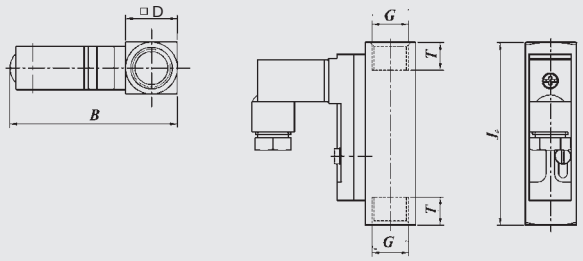

Water 10 % accuracy -size 2-

0.02 .. 0.2	27	31	67	1/2"	15	14	90	350
0.2 .. 0.6								
0.4 .. 1.8								
0.8 .. 3.2								
2.0 .. 7.0								
3.0 .. 13.0								
4.0 .. 20.0								
8.0 .. 30.0								

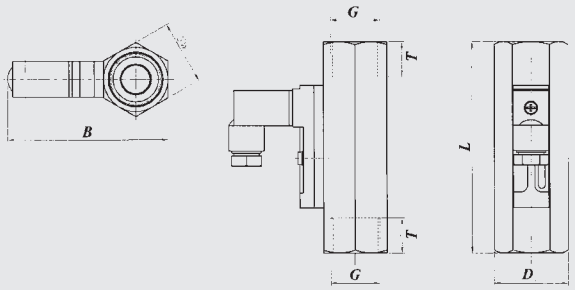

Water 10 % accuracy -size 3-

10 .. 30	34 41	47	99	3/4" 1"*)	20 25	15 17	152 130	1240 1030
15 .. 45								
20 .. 60								
30 .. 90								
60 .. 150	41	47	99	1"	25	17	130	1030

*) Standard

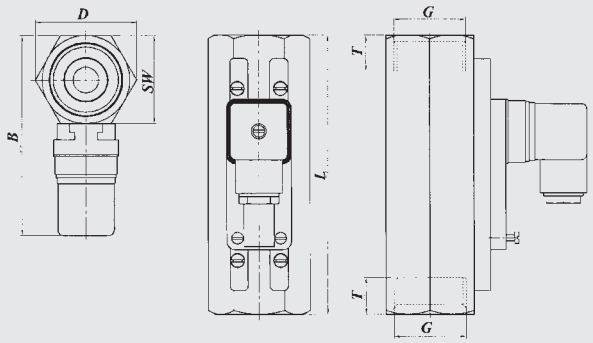

Dimensions with indicator:

Type [l/min]	Installation dimensions [mm]							Weight (approx.) [g]
	SW	D	W	G	DN	T	L	
Water 5 % accuracy								
0.2 .. 4.0	27	30	88	1/4" 3/8" 1/2"	8 10 15	10 15 14	131	900
0.6 .. 5.0								
0.5 .. 8.0								
1 .. 14								
1 .. 28								
2 .. 40	27 32	30	88	1/2" 3/4"	15 20	14 15	146 174	950
4 .. 55								
1 .. 70	34 40	40 40	98 98	3/4" 1"	20 25	15 17	152 156	1450 1150
8 .. 90								
5 .. 110								
10 .. 150	50	50	108	1 1/4"	32	20	200	2800
35 .. 220	50	50	108	1 1/4"	32	20	200	3050
35 .. 250	60	60	116	1 1/2"	40	20	200	3850

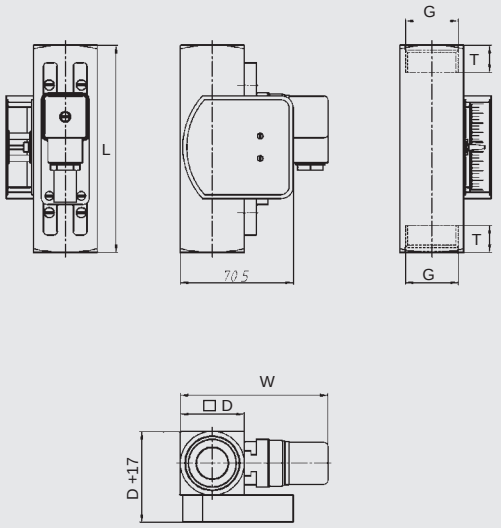

Water 10 % accuracy -size 2-

0.02 .. 0.2	30	30	70	1/2"	15	14	90	570
0.2 .. 0.6								
0.4 .. 1.8								
0.8 .. 3.2								
2.0 .. 7.0								
3.0 .. 13.0								
4.0 .. 20.0								
8.0 .. 30.0								

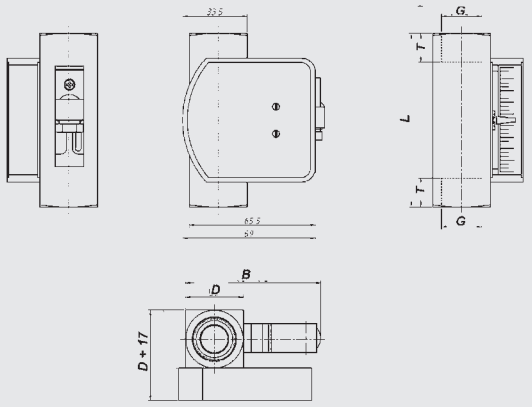

Water 10 % accuracy -size 3-

10 .. 30	34 40	40	98	3/4" 1"*)	20 25	15 17	152 130	1340 1160
15 .. 45								
20 .. 60								
30 .. 90								
60 .. 150	41	40	98	1"	25	17	130	1160

*) Standard

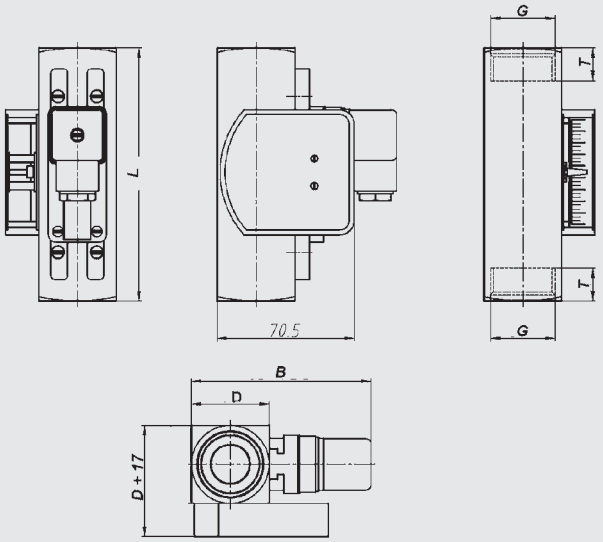

Model code:

HFS 2 5 X X – XX – XXXX–XXXX – X – X – X – 000

Measuring principle
2 = variable area float

Measuring medium
5 = water / water-based

Mechanical connection[5) 6)]
1 = 1/4"
2 = 3/8"
3 = 1/2"
4 = 3/4"
5 = 1"
6 = 1 1/4"
7 = 1 1/2"

Electrical connection
5 = male EN175301-803 3 pole + PE, (mating connector supplied)
6 = male M12x1, 4 pole (mating connector not supplied)

Switching contacts[7)]
1S = 1 N/O contact
2S = 2 N/O contacts
1W = 1 change-over contact
2W = 2 change-over contacts

Switching ranges in l/min[6)]
Water 5 %
00.2-04.0; 00.6-05.0; 00.5-08.0;
01.0-0014; 01.0-0028; 02.0-0040; 04.0-0055;
01.0-0070; 08.0-0090; 0005-0110; 0010-0150;
0035-0220; 0035-0250

==========

Water 10 % -size 1- (only available w/o mech. indicator)
005-0.06; 0.04-0.13; 00.1-00.6; 00.2-01.2;
00.4-02.0; 00.5-03.0; 01.0-05.0

Water 10 % -size 2-
0.02-00.2; 00.2-00.6; 00.4-01.8; 00.8-03.2;
02.0-07.0; 03.0-0013; 04.0-0020; 08.0-0030

Water 10 % -size 3-
0010-0030; 0015-0045; 0020-0060;
0030-0090; 0060-0150

Accuracy
6 = ≤ ± 5.0% FS
7 = ≤ ± 10.0% FS

Housing material
B = brass, nickel-plated
S = stainless steel

Mechanical indicator
0 = without indicator
1 = with indicator

Modification number
000 = standard

[5)] Mechanical connection options depend on housing type (see Dimensions)
[6)] Other types available on request
[7)] When the model with 2 switching contacts is selected, the second switching contact is fitted on the side of the instrument as standard.

Accessories:
Appropriate accessories, such as mating connectors, can be found in the Accessories brochure.

Pin connections:

EN175301-803

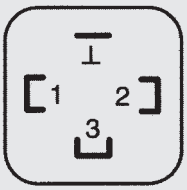

Pin	HFS 25X5-XS	HFS 25X5-XW
1	Centre	Centre
2	N/O contact	N/C contact
3	n.c.	N/O contact
⊥	n.c.	n.c.

M12x1

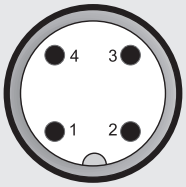

Pin	HFS 25X6-XS	HFS 25X6-XW
1	Centre	Centre
2	n.c.	N/C contact
3	n.c.	n.c.
4	N/O contact	N/O contact

Note:

The information in this brochure relates to the operating conditions and applications described.

For applications or operating conditions not described, please contact the relevant technical department.

Subject to technical modifications.

HYDAC ELECTRONIC GMBH
Hauptstr. 27, 66128 Saarbrücken
Germany
Telephone +49 (0)6897 509-01
Fax +49 (0)6897 509-1726
e-mail: electronic@hydac.com
Internet: www.hydac.com

Flow Switch
HFS 2100 Ex applications

Float	Any installation position	30–600 cSt

ATEX encapsulation
For oils / viscous media

Description:

The HYDAC HFS 2100 series flow switch in ATEX version has been specially developed for use in potentially explosive atmospheres. Like the standard version it is based on the variable area float principle.

The measuring medium deflects a spring-loaded float in the direction of flow, depending on the flow rate. A fully encapsulated reed contact is fitted to the outside of the instrument therefore separated from the fluid circuit. When the magnet inside the float reaches the pre-set position, the reed contact will switch.

Intended fields of application are, for example, the oil and gas industry, on gas turbines or in locations with high levels of dust contamination, e.g. in mills.

Protection types and applications:

ATEX
II 2G Ex mb II T6 / T5
II 2D Ex tD A21 IP67 T80 °C / T100 °C

Certificate:

- PTB 03 ATEX 2159 X
- PTB 03 ATEX N056-4

Technical data:

Input data		
Measuring ranges [l/min]	**Size 1**	**Size 2**
	0.5 .. 1.6	0.5 .. 1.5
	0.8 .. 3.0	1 .. 4
	2.0 .. 7.0	2 .. 8
		3 .. 10
		5 .. 15
		8 .. 24
		10 .. 30
		15 .. 45
		20 .. 60
		30 .. 90
		35 .. 110
Operating pressure Brass version [bar] Stainless steel version [bar]	 300 350	 250 300
Pressure drop [bar]	0.02 .. 0.2	0.02 .. 0.4
Mechanical connection	see dimensions	
Parts in contact with fluid		
Brass version	St. steel 1.4571; FKM [1]; brass nickel-pl.; brass; hard ferrite	
Stainless steel version	Stainless steel 1.4571; FKM [1]; hard ferrite	
Housing material	Brass (nickel-plated) or stainless steel 1.4571	
Output data		
Switching outputs	1 or 2 reed contacts Normally open or change-over type [2]	
Accuracy	≤ ± 10 % FS	
Repeatability	2 % FS max.	
Switching capacity		
Change-over contact	max. 250 V / 1 A / 30 W Back-up fuse 1 A (outside the hazardous area)	
N/O contact	max. 250 V / 2 A / 60 W Back-up fuse 2 A (outside the hazardous area)	
Environmental conditions		
Operating temperature range	T6 / T80 °C: -20 .. +75 °C T5 / T100 °C: -20 .. +90 °C	
Fluid temperature range	T6 / T80 °C: -20 .. +75 °C T5 / T100 °C: -20 .. +90 °C	
Max. surface temperature	T6 / T80 °C: +75 °C T5 / T100 °C: +90 °C	
Viscosity range	30 .. 600 cSt	
CE mark	2014/35/EU (not for electr. equipment for use in potentially explosive atmosphere) 2014/30/EU 2014/34/EU EN 60079-0: 2014-6; EN 60079-18: 2015-10; EN 60079-31: 2014-12; EN 13463-1: 2009; EN 1127-1: 2011	
Protection class acc. to DIN EN 60529	IP 67	

Note: **FS** (**F**ull **S**cale) = relative to complete measuring range
[1] Other seal materials on request
[2] The contact opens / switches when the flow falls below the set switch point.

Dimensions without indicator:

OIL -size 1- without indicator

Type [l/min]	Installation dimensions [mm]				Weight (approx.) [g]
	DN	SW	G	L	
0.5 .. 1.6	8	24	1/4"	98	450
	10	24	3/8"	119	500
	15	27	1/2"*)	90	400
0.8 .. 3.0	15	27	1/2"	90	400
2.0 .. 7.0					

*) Standard

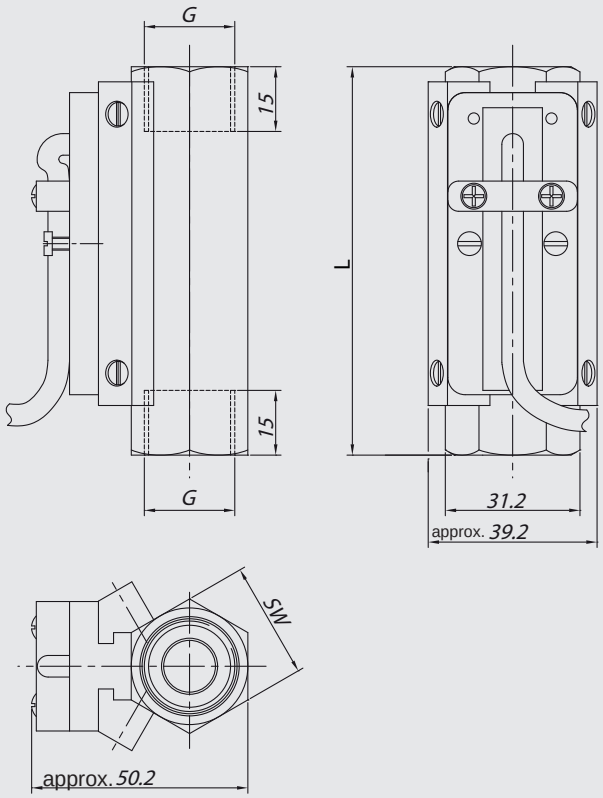

OIL -size 2- without indicator

Type [l/min]	Installation dimensions [mm]					Weight (approx.) [g]
	DN	SW	G	L	T	
0.5 .. 1.5	8	34	1/4"	152	10	1500
1 .. 4	15	34	1/2"	152	14	1425
	20	34	3/4"	152	15	1340
	25	40	1" *)	130	17	1160
2 .. 8	15	34	1/2"	152	14	1425
3 .. 10	20	34	3/4"	152	15	1340
5 .. 15	25	40	1" *)	130	17	1160
8 .. 24						
10 .. 30	20	34	3/4"	152	15	1340
15 .. 45	25	40	1" *)	130	17	1160
20 .. 60						
30 .. 90	25	40	1"	130	17	1160
35 .. 110						

*) Standard

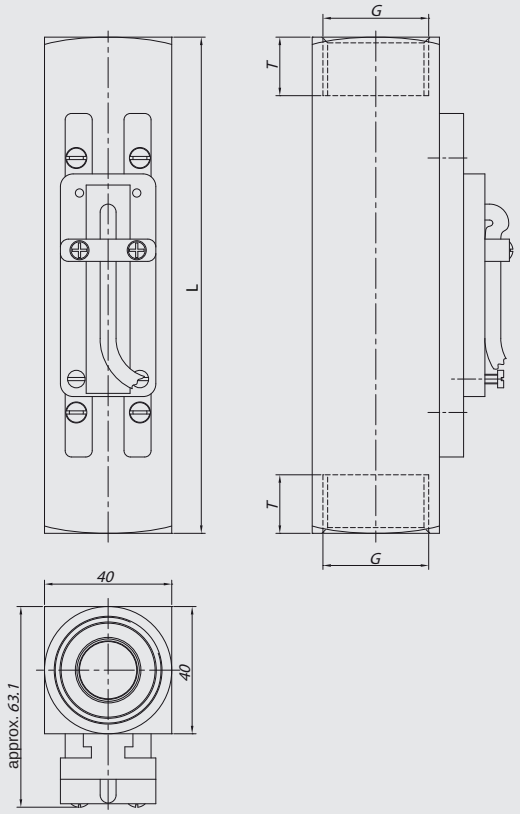

Dimensions with indicator:

OIL -size 1- with indicator

Type [l/min]	Installation dimensions [mm]				Weight (approx.) [g]
	DN	SW	G	L	
0.5 .. 1.6	15	30	1/2"	90	620
0.8 .. 3.0					
2.0 .. 7.0					

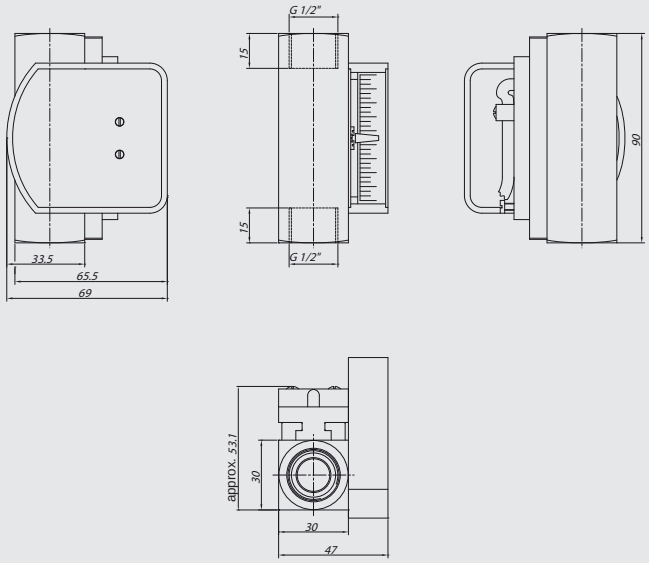

OIL -size 2- without indicator

Type [l/min]	Installation dimensions [mm]					Weight (approx.) [g]
	DN	SW	G	L	T	
0.5 .. 1.5	8	34	1/4"	152	10	1550
1 .. 4	15	34	1/2"	152	14	1475
	20	34	3/4"	152	15	1390
	25	40	1" *)	130	17	1210
2 .. 8	15	34	1/2"	152	14	1475
3 .. 10	20	34	3/4"	152	15	1390
5 .. 15	25	40	1" *)	130	17	1210
8 .. 24						
10 .. 30	20	34	3/4"	152	15	1390
15 .. 45	25	40	1" *)	130	17	1210
20 .. 60						
30 .. 90	25	40	1"	130	17	1210
35 .. 110						

*) Standard

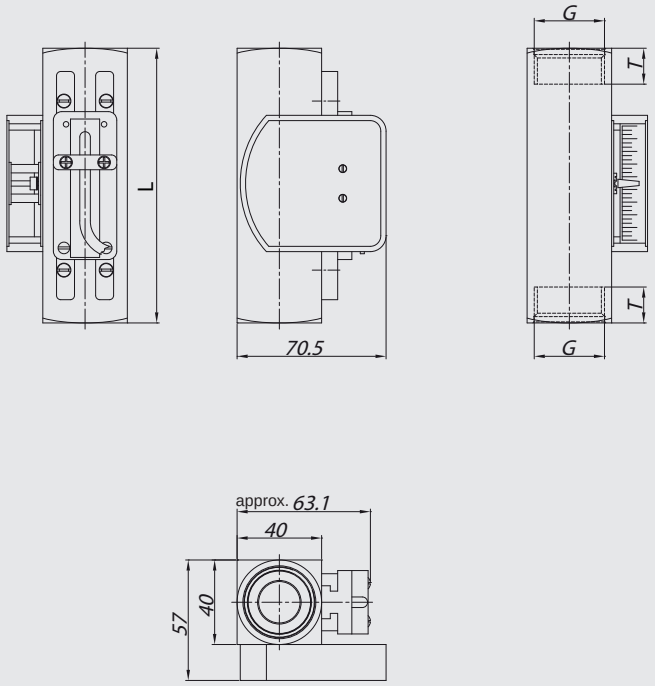

Model code:

HFS 2 1 X 1 – XX – XXXX–XXXX – 7 – X – X – A00

Measuring principle
2 = variable area float

Measuring medium
1 = oils / viscous fluids

Mechanical connection [4) 6)]
1 = 1/4"
2 = 3/8"
3 = 1/2"
4 = 3/4"
5 = 1"

Electrical connection
1 = jacketed cables (2 m length)

Switching contacts [5)]
1S = 1 N/O contact
2S = 2 N/O contacts
1W = 1 change-over contact
2W = 2 change-over contacts

Switching ranges in l/min [6)]
Oil 10 % -size 1-
00.5-01.6; 00.8-03.0; 02.0-07.0

Oil 10 % -size 2-
00.5-01.5; 0001-0004; 0002-0008; 0003-0010; 0005-0015; 0008-0024; 0010-0030; 0015-0045; 0020-0060; 0030-0090; 0035-0110

Accuracy
7 = ≤ ± 10.0 % FS

Housing material
B = brass, nickel-plated
S = stainless steel

Mechanical indicator
0 = without indicator
1 = with indicator

Modification number
A00 = ATEX version for potentially explosive atmospheres

[4)] Mechanical connection options depend on housing type (see Dimensions).
[5)] When the model with 2 switching contacts is selected, the second switching contact is fitted on the side of the instrument as standard.
[6)] Other types available on request

Accessories:
Appropriate accessories, such as mating connectors, can be found in the Accessories brochure.

Pin assignment:

Jacketed cable

Core	HFS 21X1-XS	HFS 21X1-XW
1	N/O contact	Centre
2		N/C contact
3		N/O contact

Note:

The information in this brochure relates to the operating conditions and applications described.

For applications or operating conditions not described, please contact the relevant technical department.

Subject to technical modifications.

HYDAC ELECTRONIC GMBH
Hauptstraße 27, 66128 Saarbrücken
Germany
Telephone +49 (0)6897 509-01
Fax +49 (0)6897 509-1726
E-mail: electronic@hydac.com
Internet: www.hydac.com

Flow Switch
HFS 2500 Ex applications

Float	Any installation position	30–600 cSt

ATEX encapsulation
For water / water-based media

Description:

The HYDAC HFS 2500 series flow switch in ATEX version has been specially developed for use in potentially explosive atmospheres. Like the standard version it is based on the variable area float principle.

The measuring medium deflects a spring-loaded float in the direction of flow, depending on the flow rate. A fully encapsulated reed contact is fitted to the outside of the instrument therefore separated from the fluid circuit. When the magnet inside the float reaches the pre-set position, the reed contact will switch.

Intended fields of application are, for example, the oil and gas industry, on gas turbines or in locations with high levels of dust contamination, e.g. in mills.

Protection types and applications:

ATEX
II 2G Ex mb II T6 / T5
II 2D Ex tD A21 IP67 T80 °C / T100 °C

Certificate:

- PTB 03 ATEX 2159 X
- PTB 03 ATEX N056-4

Technical data:

Input data

Measuring ranges [l/min]	5 % accuracy		10 % accuracy	
			Size 2	Size 3
	0.2 .. 4.0	8 .. 90	0.02 .. 0.2	10 .. 30
	0.6 .. 5.0	5 .. 110	0.2 .. 0.6	15 .. 45
	0.5 .. 8.0	10 .. 150	0.4 .. 1.8	20 .. 60
	1 .. 14	35 .. 220	0.8 .. 3.2	30 .. 90
	1 .. 28	35 .. 250	2 .. 7	60 .. 150
	2 .. 40		3 .. 13	
	4 .. 55		4 .. 20	
	1 .. 70		8 .. 30	
Operating pressure				
Brass version [bar]	200		300	250
Stainless steel version [bar]	300		350	300
Pressure drop [bar]	0.02 .. 0.8		0.02 .. 0.3	0.02 .. 0.4

Mechanical connection	see dimensions
Parts in contact with fluid Brass version Stainless steel version	 Stainl. steel 1.4571; NBR [1]; brass (nickel-pl.); brass; hard ferrite Stainless steel 1.4571; FKM [1]; hard ferrite
Housing material	Brass (nickel-plated) or stainless steel 1.4571

Output data

Switching outputs [2]	1 or 2 reed contacts Normally open or change-over type [2]
Accuracy	≤ ± 5 % or ≤ ± 10 % FS
Repeatability	2 % FS max.

Switching capacity

Change-over contact	max. 250 V / 1 A / 30 W Back-up fuse 1 A (outside the hazardous area)
N/O contact	max. 250 V / 2 A / 60 W Back-up fuse 2 A (outside the hazardous area)

Environmental conditions

Operating temperature range	T6 / T80 °C: T5 / T100 °C:	-20 .. +75 °C -20 .. +90 °C
Fluid temperature range	T6 / T80 °C: T5 / T100 °C:	-20 .. +75 °C -20 .. +90 °C
Max. surface temperature	T6 / T80 °C: T5 / T100 °C:	+75 °C +90 °C
CE mark	2014/35/EU (not for electr. equipment for use in potentially explosive atmosphere) 2014/30/EU 2014/34/EU EN 60079-0: 2014-6; EN 60079-18: 2015-10; EN 60079-31: 2014-12; EN 13463-1: 2009; EN 1127-1: 2011	
Protection class acc. to DIN EN 60529	IP 67	

Note: **FS** (**F**ull **S**cale) = relative to complete measuring range

[1] Other seal materials on request
[2] The contact opens / switches when the flow falls below the set switch point.

Dimensions without indicator:

Type [l/min]	Installation dimensions [mm]							Weight (approx.) [g]
	SW	D	W	G	DN	T	L	
Water 5 % accuracy								
0.2 .. 4.0	27	30	53	1/4" 3/8" 1/2"	8 10 15	10 15 14	131	850
0.6 .. 5.0								
0.5 .. 8.0								
1 .. 14								
1 .. 28								
2 .. 40	27 32	30	53	1/2" 3/4"	15 20	14 15	146 174	900
4 .. 55								
1 .. 70	34 40	40 40	63 63	3/4" 1"	20 25	15 17	152 156	1400 1100
8 .. 90								
5 .. 110								
10 .. 150	50	50	73	1 1/4"	32	20	200	2750
35 .. 220	50	50	73	1 1/4"	32	20	200	3000
35 .. 250	60	60	81	1 1/2"	40	20	200	3800

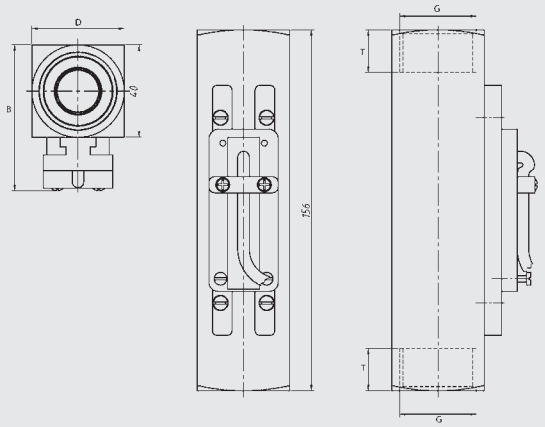

Water 10 % accuracy -size 2-

0.02 .. 0.2	27	31	50	1/2"	15	14	90	400
0.2 .. 0.6								
0.4 .. 1.8								
0.8 .. 3.2								
2.0 .. 7.0								
3.0 .. 13.0								
4.0 .. 20.0								
8.0 .. 30.0								

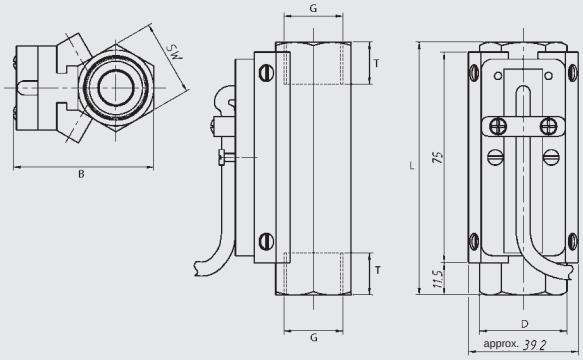

Water 10 % accuracy -size 3-

10 .. 30	34 41	47	63	3/4" 1"*)	20 25	15 17	152 130	1240 1030
15 .. 45								
20 .. 60								
30 .. 90								
60 .. 150	41	47	63	1"	25	17	130	1030

*) Standard

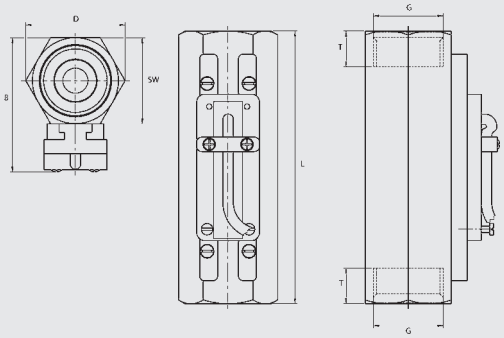

Dimensions with indicator:

Type [l/min]	Installation dimensions [mm]							Weight (approx.) [g]
	SW	D	W	G	DN	T	L	
Water 5 % accuracy								
0.2 .. 4.0	27	30	53	1/4" 3/8" 1/2"	8 10 15	10 15 14	131	900
0.6 .. 5.0								
0.5 .. 8.0								
1 .. 14								
1 .. 28								
2 .. 40	27 32	30	53	1/2" 3/4"	15 20	14 15	146 174	950
4 .. 55								
1 .. 70	34 40	40 40	63 63	3/4" 1"	20 25	15 17	152 156	1450 1150
8 .. 90								
5 .. 110								
10 .. 150	50	50	73	1 1/4"	32	20	200	2800
35 .. 220	50	50	73	1 1/4"	32	20	200	3050
35 .. 250	60	60	81	1 1/2"	40	20	200	3850

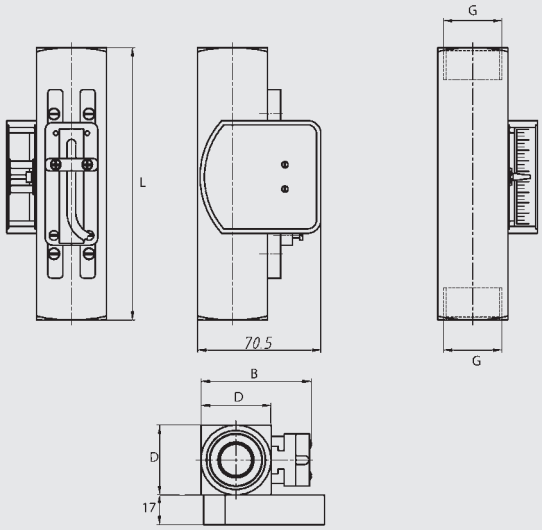

Water 10 % accuracy -size 2-

0.02 .. 0.2	30	30	53	1/2"	15	14	90	570
0.2 .. 0.6								
0.4 .. 1.8								
0.8 .. 3.2								
2.0 .. 7.0								
3.0 .. 13.0								
4.0 .. 20.0								
8.0 .. 30.0								

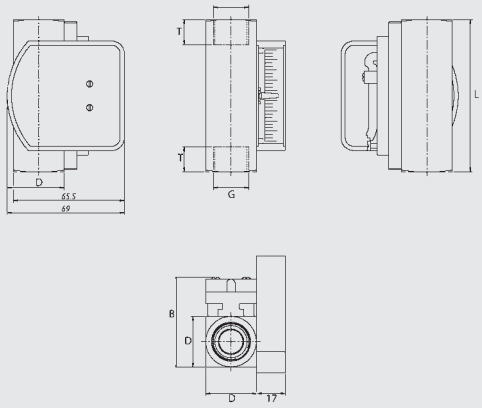

Water 10 % accuracy -size 3-

10 .. 30	34 40	40	63	3/4" 1"*)	20 25	15 17	152 130	1390 1210
15 .. 45								
20 .. 60								
30 .. 90								
60 .. 150	40	40	63	1"	25	17	130	1210

*) Standard

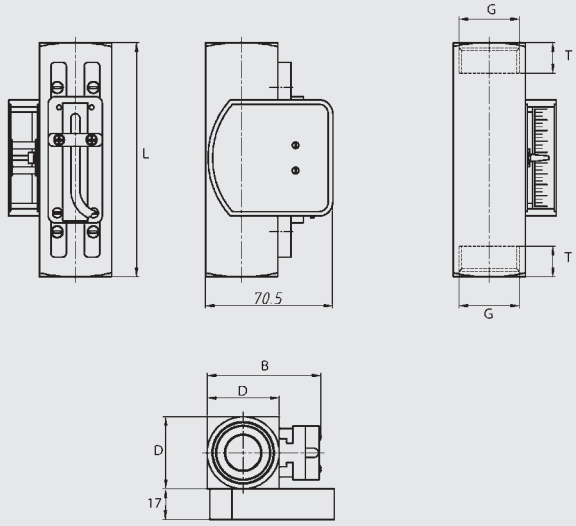

Model code:

HFS 2 5 X 1 – XX – XXXX–XXXX – X – X – X – A00

Measuring principle
2 = variable area float

Measuring medium
5 = water / water-based

Mechanical connection [3) 5)]
1 = 1/4"
2 = 3/8"
3 = 1/2"
4 = 3/4"
5 = 1"
6 = 1 1/4"
7 = 1 1/2"

Electrical connection
1 = jacketed cable (2 m length)

Switching contacts [4)]
1S = 1 N/O contact
2S = 2 N/O contacts
1W = 1 change-over contact
2W = 2 change-over contacts

Switching ranges in l/min [5)]
Water 5 %
00.2-04.0; 00.6-05.0; 00.5-08.0;
01.0-0014; 01.0-0028; 02.0-0040; 04.0-0055;
01.0-0070; 08.0-0090; 0005-0110; 0010-0150;
0035-0220; 0035-0250

==========

Water 10 % -size 2-
0.02-00.2; 00.2-00.6; 00.4-01.8; 00.8-03.2;
02.0-07.0; 03.0-0013; 04.0-0020; 08.0-0030

Water 10 % -size 3-
0010-0030; 0015-0045; 0020-0060;
0030-0090; 0060-0150

Accuracy
6 = ≤ ± 5.0 % FS
7 = ≤ ± 10.0 % FS

Housing material
B = brass, nickel-plated
S = stainless steel

Mechanical indicator
0 = without indicator
1 = with indicator

Modification number
A00 = ATEX version for potentially explosive atmospheres

[3)] Mechanical connection options depend on housing type (see Dimensions)
[4)] When the model with 2 switching contacts is selected, the second switching contact is fitted on the side of the instrument as standard.
[5)] Other types available on request.

Accessories:
Appropriate accessories, such as mating connectors, can be found in the Accessories brochure.

Pin connections:

Jacketed cable

Core	HFS 25X1-XS	HFS 25X1-XW
1	N/O contact	Centre
2		N/C contact
3		N/O contact

Note:

The information in this brochure relates to the operating conditions and applications described.

For applications or operating conditions not described, please contact the relevant technical department.

Subject to technical modifications.

HYDAC ELECTRONIC GMBH
Hauptstraße 27, 66128 Saarbrücken
Germany
Telephone +49 (0)6897 509-01
Fax +49 (0)6897 509-1726
E-mail: electronic@hydac.com
Internet: www.hydac.com

SPEED SENSORS [8]

	Page
HSS 110	405
HSS 120	407
HSS 130	409
HSS 210	411
HSS 220	413

Speed Sensor HSS 110

1 channel | Flange housing

Optional PWM

Description:

The contact-free speed sensors of the HSS 110 series detect the movement of ferromagnetic structures, such as gear wheels, gear rims or perforated discs, using the changes in magnetic flux.

So each sensor has two Hall elements and the differential between the two signals is detected, evaluated and then converted into an output signal suitable for processing.

For integration into standard controls, standard output signals are available.

Due to their extremely compact design, the robust housing and protection class IP 6K9K, the devices can be used in almost any application and any mounting position.

The main fields of application are detection of speed and rotation direction on gear wheels with small module and high resolution, especially in vehicles and mobile machines with electrical and hydraulic drives.

Technical data:

Input data	
Frequency range	NPN frequency output: 0,1 .. 20,000 Hz PWM output: 0.1 .. 12,000 Hz
Probe length Probe diameter	18.4 mm 10.2 mm
Max. pressure on sensing surface	25 bar, static
Mechanical connection	Flange, single, asymmetrical, cable outlet 90°
Tightening torque, recommended	Max. 8 Nm
Type of installation	Dependent on direction (with asymmetrical flange)
Housing material Seal	Brass FKM
Output data	
Output signal	NPN frequency output Signal level: HIGH: $+U_B$ / LOW: ≤ 0.6 V Max. switching current: ≤ 40 mA PWM output, 4 .. 20 mA Signal level: HIGH: 12 .. 17 mA / LOW: 4 .. 9 mA Max. switching current: ≤ 200 mA
Environmental conditions	
Operating temperature range	-40 .. +140 °C
Media resistance of housing	Salt water; various hydraulic oils; diesel oils; cleaning agent; salt spray
CE mark	EN 61000-4-2/3/4/6/8
Vibration resistance acc. to EN 60068-2-6	0.05 g^2 / Hz, 20 .. 2,000 Hz
Shock resistance acc. to EN 60068-2-27	100 g, 6 ms, 3x in each direction
Protection class acc. to IEC 60529	IP 67; IP 6K9K
Other data	
Electrical connection	Jacketed cable, 3-core, 1 m cable length
Supply voltage	NPN frequency output: 12.5 .. 32 V DC PWM output: 4.5 .. 24 V DC
Residual ripple of supply voltage	≤ 5 %
Current consumption	< 30 mA at 30 V DC
Life expectancy	875,000 h (MTTF) / 1,750,000 h ($MTTF_d$)
Weight	~ 50 g

Note: Reverse polarity protection of the supply voltage and load short circuit protection (max. 50 mA) are provided.

Switching/installation distance:

Module 1	0.2 .. 0.8 mm
Module 1.25	0.2 .. 1.4 mm
Module 1.5	0.2 .. 1.8 mm
Module 2	0.2 .. 2.4 mm
Module 3	0.2 .. 2.9 mm

Pin connections:

Lead	HSS 110-1	HSS 110-4
red	$+U_B$	$+U_B$
black	0 V	PWM
blue	Frequency	

Mounting position tolerance:

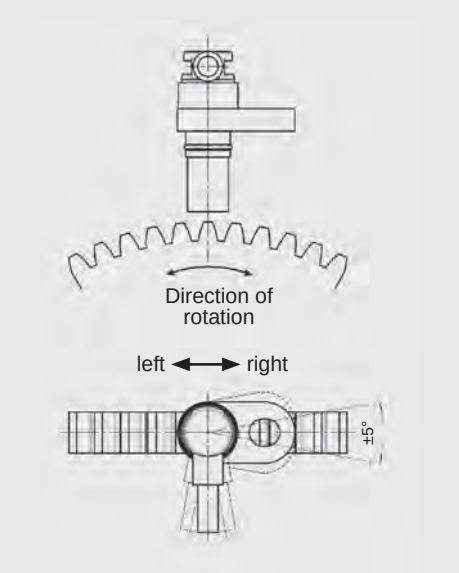

Direction of rotation (only PWM):

Flange left, gear wheel rotating clockwise, impulse duration defines PWM signal

Specification for installation cavity:

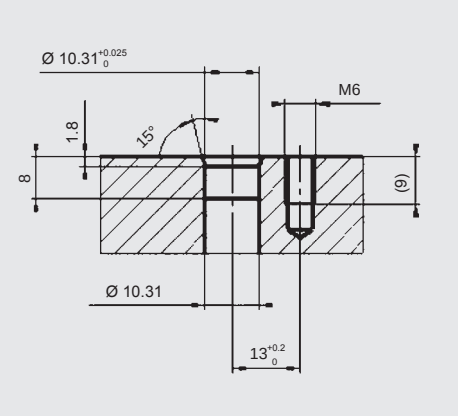

Dimensions:

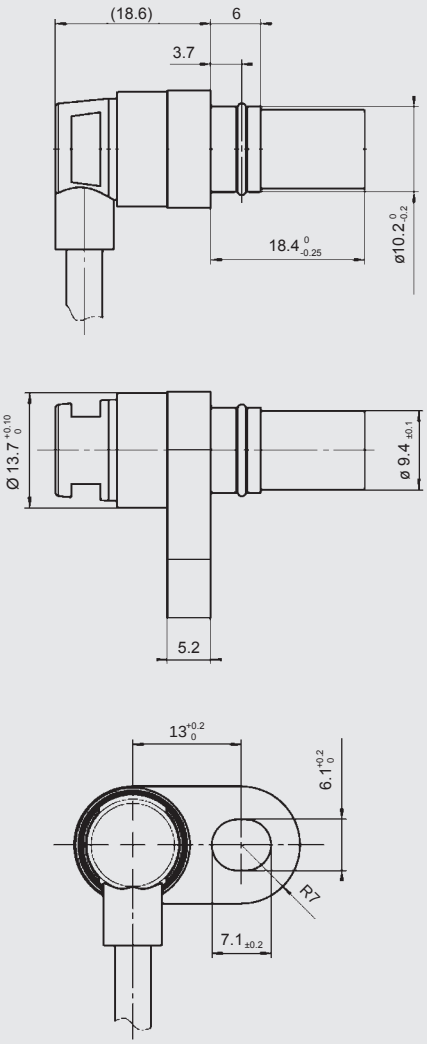

Model code:

HSS 1 1 0 – X – 018 – 000

Signal technology
1 = output 1: frequency
4 = output 1: PWM (frequency and direction of rotation)

Probe length
018 = 18.4 mm

Modification number
000 = standard

Note:

The information in this brochure relates to the operating conditions and applications described.

For applications or operating conditions not described, please contact the relevant technical department.

Subject to technical modifications.

HYDAC ELECTRONIC GMBH
Hauptstr. 27, 66128 Saarbrücken
Germany
Telephone +49 (0)6897 509-01
Fax +49 (0)6897 509-1726
e-mail: electronic@hydac.com
Internet: www.hydac.com

Speed Sensor HSS 120

2 channel | Flange housing

Description:

The contact-free speed sensors of the HSS 120 series detect the movement of ferromagnetic structures, such as gear wheels, gear rims or perforated discs, using the changes in magnetic flux.

So each sensor has two Hall elements and the differential between the two signals is detected, evaluated and then converted into an output signal suitable for processing.

The instruments are available in different immersion depths. For integration into standard controls, standard output signals are available.

Due to their extremely compact design, the robust housing and protection class IP 6K9K, the devices can be used in almost any application and any mounting position.

The main fields of application are detection of speed and rotation direction on gear wheels with a small module and high resolution, especially in vehicles and mobile machines with hydraulic drives.

Technical data:

Input data	
Frequency range	0.1 .. 20,000 Hz
Probe length Probe diameter	30; 35; 45 mm 15 mm
Max. pressure on sensing surface	15 bar (dynamic and static)
Mechanical connection	Flange, single, asymmetrical, cable outlet 90° (30 mm) / axial (35, 45 mm)
Tightening torque, recommended	10 Nm
Type of installation	Dependent on direction (with asymmetrical flange)
Housing material Seal	Brass FKM
Output data	
Output signal	2 NPN frequency outputs Signal level: HIGH: $+U_B$ / LOW: ≤ 0.6 V Max. switching current: ≤ 50 mA
Environmental conditions	
Operating temperature range	-40 .. +140 °C (-40 .. +160 °C for max. 500 operating hours)
Media resistance of housing	Salt water; various hydraulic oils; diesel oils; cleaning agent; salt spray
CE mark	EN 61000-4-2/3/4/6/8
Vibration resistance acc. to EN 60068-2-6	30 g, 10 .. 500 Hz, 100 min in each direction
Shock resistance acc. to EN 60068-2-27 / -29	50 g, 11 ms, 3x in each direction 100 g, 6 ms, 3x in each direction
Protection class acc. to IEC 60529	IP 67; IP 6K9K
Other data	
Electrical connection	Jacketed cable, 4-core, 1 m cable length
Supply voltage	7 .. 30 V DC
Residual ripple of supply voltage	≤ 5 %
Current consumption	< 30 mA at 30 V DC
Life expectancy	195,000 h (MTTF) / 390,000 h ($MTTF_d$)
Weight	~ 80 g

Note: Reverse polarity protection of the supply voltage and load short circuit protection (max. 50 mA) are provided.

Switching/installation distance:

Probe length:	30 mm	35 / 45 mm
Module 1	0.2 .. 1.0 mm	0.2 .. 1.3 mm
Module 1.25	0.2 .. 1.5 mm	0.2 .. 1.8 mm
Module 1.5	0.2 .. 1.7 mm	0.2 .. 2.0 mm
Module 2	0.2 .. 2.2 mm	0.2 .. 2.5 mm
Module 2.5	0.2 .. 3.2 mm	0.2 .. 3.5 mm

Pin connections:

Lead	HSS 120-2
brown	$+U_B$
blue	Frequency 1 (A)
black	0 V
white	Frequency 2 (B)

Adjustment angle for other modules:

It is possible to achieve a 90° phase shift of the two frequency signals by turning the sensor accordingly.

-20°	Module 1	
-15°	Module 1.25	
-10°	Module 1.5	
± 0°	Module 2	± 0°
	Module 2.5	+15°

Direction of rotation:

Flange left, gear turns clockwise:
channel A following; channel B leading

Specification for installation cavity:

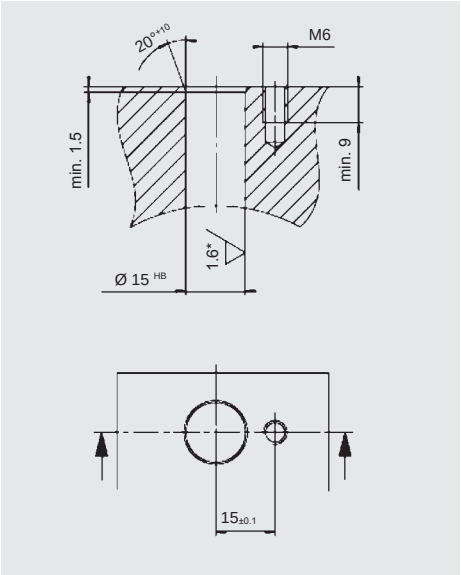

* For sealing function RA 1.6, otherwise 3.2

Dimensions:

Probe length (A): 35 mm, 45 mm

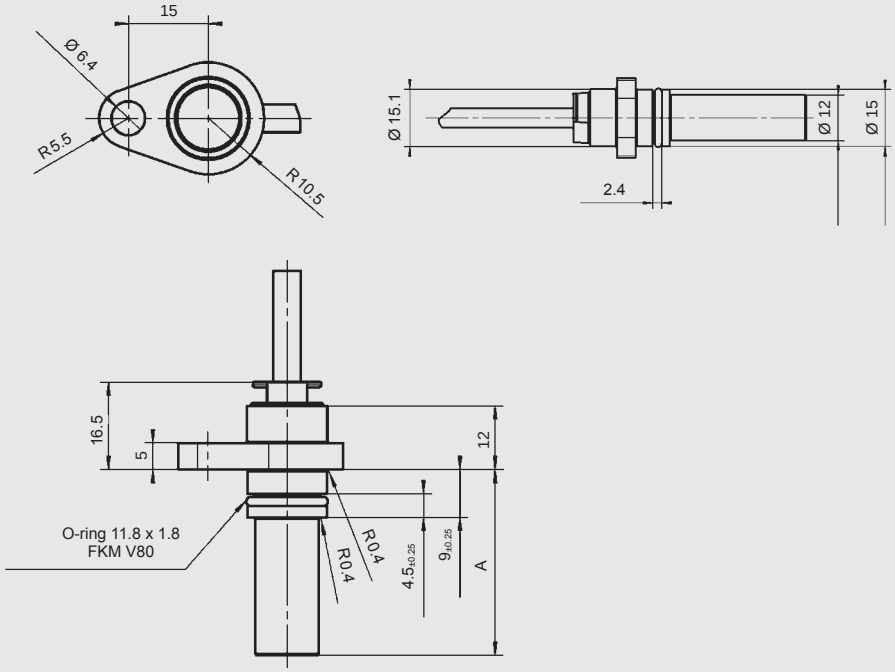

Probe length: 30 mm

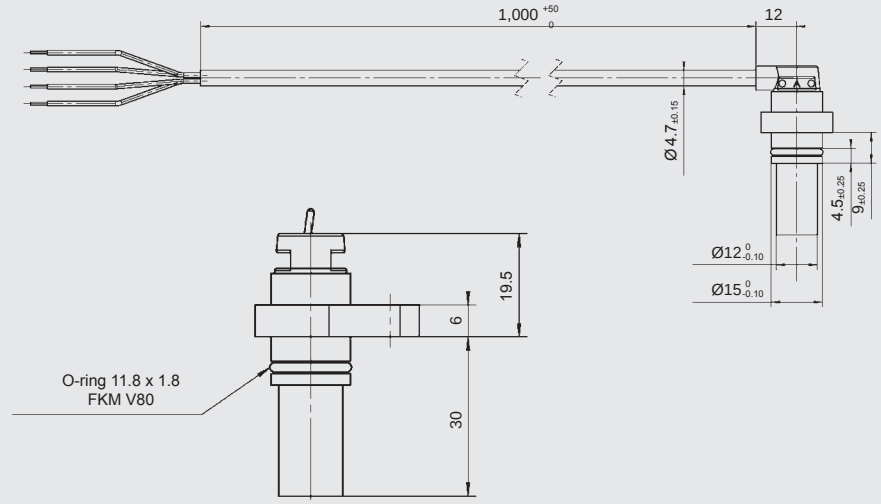

Model code:

HSS 1 2 0 – 2 – XXX – 000

Signal technology
2 = outputs 1 and 2: frequency (90° / 270° phase shift for module "2")

Probe length
030 = 30 mm
035 = 35 mm
045 = 45 mm

Modification number
000 = standard

Note:

The information in this brochure relates to the operating conditions and applications described.

For applications or operating conditions not described, please contact the relevant technical department.

Subject to technical modifications.

HYDAC ELECTRONIC GMBH
Hauptstr. 27, 66128 Saarbrücken
Germany
Telephone +49 (0)6897 509-01
Fax +49 (0)6897 509-1726
e-mail: electronic@hydac.com
Internet: www.hydac.com

Speed Sensor HSS 130

2 channel | Flange housing

Direct detection of direction of rotation

Description:

The contact-free speed sensors of the HSS 130 series detect the movement of ferromagnetic structures, such as gear wheels, gear rims or perforated discs, using the changes in magnetic flux.

So each sensor has two Hall elements and the differential between the two signals is detected, evaluated and then converted into an output signal suitable for processing.

The instruments are available in different immersion depths. For integration into standard controls, standard output signals are available.

Due to their extremely compact design, the robust housing and protection class IP 6K9K, the devices can be used in almost any application and any mounting position.

These devices are mainly used for detection of speed and rotation direction on rotary sensors, even under extreme environmental conditions.

Technical data:

Input data	
Frequency range	0.1 .. 20,000 Hz
Probe length Probe diameter	16; 32 mm 18 mm
Max. pressure on sensing surface	10 bar (dynamic and static)
Mechanical connection	Double flange, asymmetrical, cable outlet at 90°
Tightening torque, recommended	10 Nm
Type of installation	Dependent on direction (with asymmetrical flange)
Housing material Seal	Brass/plastic (PA6 GF30) FKM
Output data	
Output signal	2 NPN frequency outputs Signal level: HIGH: ≥ 5 V / LOW: ≤ 2 V Max. switching current: ≤ 500 mA 1 NPN frequency output + 1 NPN dir. of rotation output Signal level: HIGH: ≥ 5 V / LOW: ≤ 2 V Max. switching current: ≤ 500 mA
Environmental conditions	
Operating temperature range	-40 .. +125 °C
Media resistance of housing	Saltwater and various hydraulic oils
CE mark	EN 61000-4-2/3/4/6/8
Vibration resistance acc. to EN 60068-2-36	5 .. 57 Hz (1.5 mm p-p), sine 57 .. 2000 Hz (10 g), sine
Shock resistance acc. to EN 60068-2-27	15 g, 11 ms, 3x in each direction 25 g, 6 ms, 3x in each direction
Protection class acc. to IEC 60529	IP 67; IP 6K9K
Other data	
Electrical connection	Jacketed cable, 4-core, 43 cm cable length
Supply voltage	8 .. 32 V DC
Residual ripple of supply voltage	≤ 5 %
Current consumption	< 33 mA at 24 V, both outputs LOW < 23 mA at 24 V, both outputs HIGH
Life expectancy	120,000 h (MTTF) / 240,000 h ($MTTF_d$)
Weight	~ 110 g

Note: Reverse polarity protection of the supply voltage and load short circuit protection are provided.

Switching/installation distance:

Module 1	0.2 .. 1.3 mm
Module 1.25	0.2 .. 1.8 mm
Module 1.5	0.2 .. 2.0 mm
Module 2	0.2 .. 2.5 mm
Module 2.5	0.2 .. 3.5 mm

Pin connections:

Lead	HSS 130-2	HSS 130-3
brown	$+U_B$	$+U_B$
blue	0 V	0 V
black	Frequency 1	Frequency
white	Frequency 2	Direction of rotation

Adjustment angle for other modules:

It is possible to achieve a 90° phase shift of the two frequency signals by turning the sensor accordingly.

-12°	Module 1	
- 9°	Module 1.25	
- 7°	Module 1.5	
- 3°	Module 1.75	
± 0°	Module 2	± 0°
	Module 2.25	+ 4°
	Module 2.5	+ 8°
	Module 2.75	+13°
	Module 3	+17°

Direction of rotation:

Cable outlet at 90°, gear rotation clockwise: channel A leading; channel B following or rotational direction signal (right HIGH / left LOW)

Specification for installation cavity:

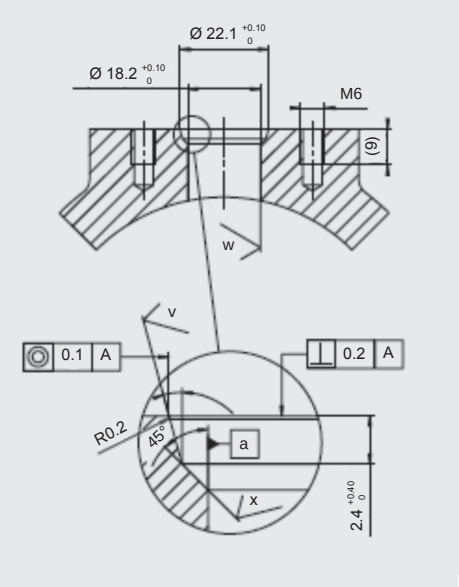

- General tolerances for chipping processes: ISO 2768-mH
- Tolerance: ISO 8015
- Surface quality: ISO 1302

Dimensions:

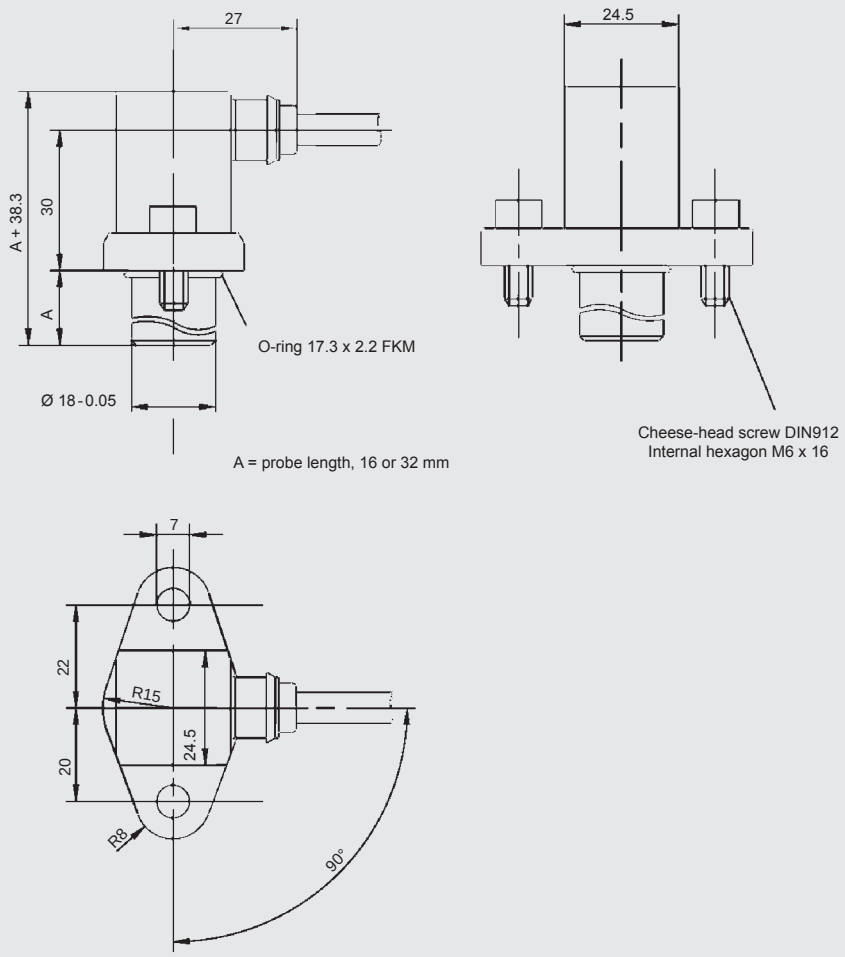

Model code:

HSS 1 3 0 – X – XXX – 000

Signal technology
2 = outputs 1 and 2: frequency (90° / 270° phase shift for module "2")
3 = output 1: frequency output 2: direction of rotation

Probe length
016 = 16 mm
032 = 32 mm

Modification number
000 = standard

Note:

The information in this brochure relates to the operating conditions and applications described.

For applications or operating conditions not described, please contact the relevant technical department.

Subject to technical modifications.

HYDAC ELECTRONIC GMBH
Hauptstr. 27, 66128 Saarbrücken
Germany
Telephone +49 (0)6897 509-01
Fax +49 (0)6897 509-1726
e-mail: electronic@hydac.com
Internet: www.hydac.com

Speed Sensor HSS 210

2 channel | **Screw-in thread M12**

Direct detection of direction of rotation

Description:

The contact-free speed sensors of the HSS 210 series detect the movement of ferromagnetic structures, such as gear wheels, gear rims or perforated discs, using the changes in magnetic flux.

So each sensor has two Hall elements and the differential between the two signals is detected, evaluated and then converted into an output signal suitable for processing.

For integration into standard controls, standard output signals are available.

Due to their extremely compact design, the robust housing and protection class IP 67, the instruments can be used in almost any application and any mounting position.

The main fields of application are detection of speed and rotation direction on gear wheels with a small module and high resolution, especially in vehicles and mobile machines with hydraulic drives.

Technical data:

Input data	
Frequency range	0.1 .. 20,000 Hz
Installation depth	0 .. 50 mm adjustable
Max. pressure on sensing surface	10 bar (dynamic and static)
Mechanical connection	Screw-in thread M12x1
Tightening torque, recommended	Max. 13 Nm
Type of installation	Dependent on direction
Housing material	Brass
Output data	
Output signal	2 NPN frequency outputs Signal level: HIGH: ≥ $+U_B$ / LOW: 0.5 V Max. switching current: ≤ 50 mA 1 push-pull frequency output + 1 push-pull dir. of rotation output Signal level: HIGH: ≥ $+U_B$ -2 V / LOW: ≤ 2 V Max. switching current: ≤ 50 mA
Environmental conditions	
Operating temperature range	-40 .. +125 °C
Media resistance of housing	Oils: HETG; HEES, HFD; HVLP; HLP
CE mark	EN 61000-4-2/3/4/6/8
Vibration resistance acc. to EN 60068-2-64	0.05 g^2/Hz, 20 .. 2.000 Hz
Shock resistance acc. to EN 60068-2-27	30 g, 11 ms
Protection class acc. to IEC 60529	IP 67 (when an IP 67 mating connector is used)
Other data	
Electrical connection	Male M12x1, 4 pole
Supply voltage	8 .. 30 V DC
Residual ripple of supply voltage	≤ 5 %
Current consumption	< 30 mA at 30 V DC
Life expectancy	200,000 h (MTTF) / 400,000 h ($MTTF_d$)
Weight	~ 40 g

Note: Reverse polarity protection of the supply voltage and load short circuit protection are provided.

Switching/installation distance:

Module 1	0.2 .. 1.0 mm
Module 1.25	0.2 .. 1.5 mm
Module 1.5	0.2 .. 1.7 mm
Module 2	0.2 .. 2.2 mm
Module 2.5	0.2 .. 3.2 mm

Pin connections:

M12x1, 4 pole

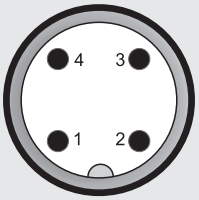

Pin	HSS 210-2	HSS 210-3
1	$+U_B$	$+U_B$
2	Frequency 1 (A)	Frequency
3	0 V	0 V
4	Frequency 2 (B)	Direction of rotation

Direction of rotation:

Marking on housing in direction of rotation, gear rotation clockwise: channel A leading; channel B following or direction of rotation signal (right HIGH / left LOW)

Adjustment angle for other modules:

It is possible to achieve a 90° phase shift of the two frequency signals by turning the sensor accordingly.

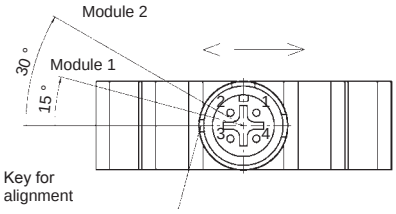

Module 1	+15°
Module 1.25	+18°
Module 1.5	+23°
Module 2	+30°
Module 2.5	+38°

Dimensions:

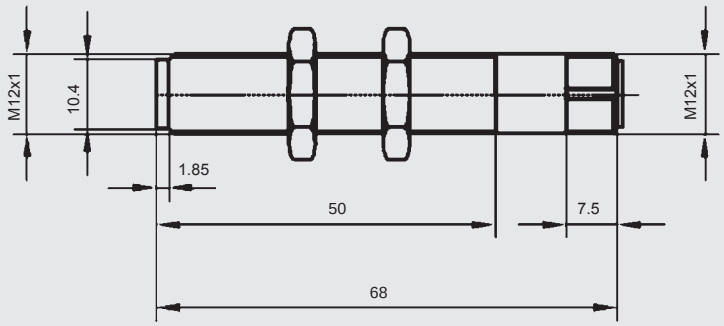

Model code:

HSS 2 1 0 – X – 050 – 000

Signal technology
2 = outputs 1 and 2: frequency (90° / 270° phase shift)
3 = output 1: frequency
output 2: direction of rotation

Installation depth
050 = 50 mm max.

Modification number
000 = standard

Note:

The information in this brochure relates to the operating conditions and applications described.

For applications or operating conditions not described, please contact the relevant technical department.

Subject to technical modifications.

HYDAC ELECTRONIC GMBH
Hauptstr. 27, 66128 Saarbrücken
Germany
Telephone +49 (0)6897 509-01
Fax +49 (0)6897 509-1726
e-mail: electronic@hydac.com
Internet: www.hydac.com

Speed Sensor HSS 220

2 channel | **Screw-in thread M18**

Direct detection of direction of rotation

Description:

The contact-free speed sensors of the HSS 220 series detect the movement of ferromagnetic structures, such as gear wheels, gear rims or perforated discs, using the changes in magnetic flux.

So each sensor has two Hall elements and the differential between the two signals is detected, evaluated and then converted into an output signal suitable for processing.

For integration into standard controls, standard output signals are available.

Due to their extremely compact design, the robust housing and protection class IP 67, the instruments can be used in almost any application and any mounting position.

The main fields of application are detection of speed and rotation direction on gear wheels with a small module and high resolution, especially in rail vehicles and mobile machines.

Technical data:

Input data	
Frequency range	0.1 .. 20,000 Hz
Installation depth	0 .. 48 mm adjustable
Max. pressure on sensing surface	10 bar, static
Mechanical connection	Screw-in thread M18x1
Tightening torque, recommended	Max. 12 Nm
Type of installation	Dependent on direction
Housing material	X12CrNiS18 8
Output data	
Output signal	2 NPN frequency outputs Signal level: HIGH: ≥ $+U_B$ - 2 V / LOW: ≤ 2 V Max. switching current: ≤ 50 mA (36 V, 125 °C, 50 % duty cycle) ≤ 500 mA (24 V, 25 °C, 50 % duty cycle) 1 NPN frequency output + 1 NPN dir. of rotation output Signal level: HIGH: ≥ $+U_B$ - 2 V / LOW: ≤ 2 V Max. switching current: ≤ 50 mA (36 V, 125 °C, 50 % duty cycle) ≤ 500 mA (24 V, 25 °C, 50 % duty cycle)
Environmental conditions	
Operating temperature range	-40 .. +125 °C
Media resistance of housing	Saltwater, various hydraulic oils
CE mark	EN 61000-4-2 / 3 / 4 / 6
Vibration resistance acc. to EN 60068-2-6	15 g / 3 .. 2,000 Hz
Shock resistance acc. to EN 60068-2-27	30 g, 11 ms, 3x in each direction
Protection class acc. to IEC 60529	IP 67 (when an IP 67 mating connector is used)
Other data	
Electrical connection	Male M12x1, 4 pole
Supply voltage	8 .. 32 V DC
Residual ripple of supply voltage	≤ 5 %
Current consumption	< 33 mA at 24 V, both outputs LOW < 23 mA at 24 V, both outputs HIGH
Life expectancy	1,100,000 h (MTTF) / 2,200,000 h ($MTTF_d$)
Weight	~ 80 g

Note: Reverse polarity protection of the supply voltage and load short circuit protection are provided.

Switching/installation distance:

Module 1	0.2 .. 1.3 mm
Module 1.25	0.2 .. 1.8 mm
Module 1.5	0.2 .. 2.0 mm
Module 2	0.2 .. 2.5 mm
Module 2.5	0.2 .. 3.5 mm

Pin connections:

M12x1, 4 pole

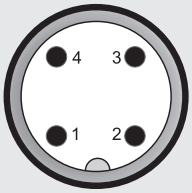

Pin	HSS 220-2	HSS 220-3
1	$+U_B$	$+U_B$
2	Frequency 2 (B)	Direction of rotation
3	0 V	0 V
4	Frequency 1 (A)	Frequency

Direction of rotation:

Marking on housing at 90° to rotational direction, gear rotation clockwise: channel A leading, channel B following or direction of rotation signal (right HIGH / left LOW)

Adjustment angle for other modules:

It is possible to achieve a 90° phase shift of the two frequency signals by turning the sensor accordingly.

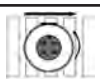

-12°	Module 1	
- 9°	Module 1.25	
- 7°	Module 1.5	
- 3°	Module 1.75	
± 0°	Module 2	± 0°
	Module 2.25	+ 4°
	Module 2.5	+ 8°
	Module 2.75	+13°
	Module 3	+17°

Dimensions:

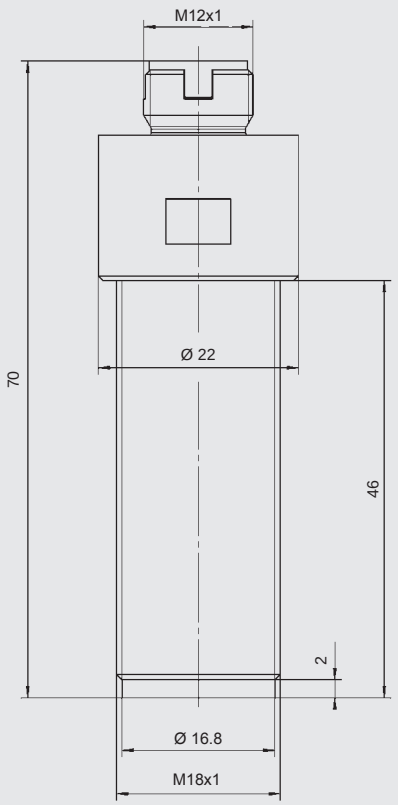

Model code:

HSS 2 2 0 – X – 046 – 000

Signal technology
2 = outputs 1 and 2: frequency
(90° / 270° phase shift for module "2")
3 = output 1: frequency
output 2: direction of rotation

Installation depth
046 = 46 mm max.

Modification number
000 = standard

Note:

The information in this brochure relates to the operating conditions and applications described.

For applications or operating conditions not described, please contact the relevant technical department.

Subject to technical modifications.

HYDAC ELECTRONIC GMBH
Hauptstr. 27, 66128 Saarbrücken
Germany
Telephone +49 (0)6897 509-01
Fax +49 (0)6897 509-1726
e-mail: electronic@hydac.com
Internet: www.hydac.com

ANGLE SENSORS [9]

			Page
HAT 1400		CAN	417
HAT 3800		CAN	419
HAT 1200	Functional safety	Analogue	421
HAT 1400	Functional safety	CAN	423
HAT 3800	Functional safety	CAN	425

Angle Sensor HAT 1400

Magnetic	Absolute	Singleturn, 14 bit

CANopen
IP 6K9K (two-chamber design)

Description:

HAT 1400 is an absolute measuring singleturn angle sensor.

Thanks to its non-contact magnetic measuring method and its robust design, the HAT 1400 is ideally suited for the measurement of the rotational angle in mobile machines.

Due to its two-chamber design, the electronic unit is completely encapsulated which means it meets IP 6K9K if the electrical connection is carried out accordingly.

In the CANopen version, the measured signal is digitised and made available to the CAN field bus system via the CANopen protocol. The instrument parameters can be viewed and configured by the user via the CANopen object directory using standard CAN software.

The sensor is therefore suitable for a large variety of applications in the automobile industry and in mobile work machines.

Especially for the use in public traffic vehicles, HAT 1400 has E13 approval (approved for road vehicles) in accordance with ECE type approval.

Technical data:

Input data	
Measuring range	0 .. 360 °
Direction of rotation	No orientation restrictions
Max. speed	17,000 rpm
Max. axial load	60 N
Max. radial load	100 N
Housing material	Stainless steel
Shaft material	Stainless steel
Output data	
Output signal	CANopen
Resolution	14 bit
Accuracy (at room temperature)	± 0.1 ° typ. ± 0.2 ° max.
Accuracy (over the temperature range)	± 0.05 ° / 10 K typ. ± 0.1 ° / 10 K max.
Repeatability	≤ ± 0.05 °
Angle increase	cw / ccw (factory-set)
Environmental conditions	
Operating temperature range	-40 .. +85 °C
Storage temperature range	-40 .. +85 °C
CE mark	EN 61000-6-1 / 2 / 3 / 4
E13 mark	E13*10R00*10R05*14136*00
Vibration resistance acc. to DIN EN 60068-2-6: 2010	7.5 mm (5 Hz ≤ f < 8.2 Hz) 2 g (8.2 Hz ≤ f < 2000 Hz)
Shock resistance acc. to DIN EN 60068-2-27: 2011	20 g (11 ms in 3 axes)
Protection class acc. to DIN EN 60529 [1]	IP 67, IP 6K9K (electronics)
Protocol data for CANopen	
Communication profile	CiA DS 301 V4.2.0
NMT-Services	CiA DSP 302 V4.1
Layer setting services and protocol	CiA DSP 305 V2.2
Encoder Device Profile	CiA DS 406 V3.2
Baud rates	10 kbit/s .. 1 Mbit/s acc. to DS305 V2.2
Transmission services - PDO - Transfer	 Measured value as 32 bit and float synchronous, asynchronous, cyclical
Node ID / baud rate	Adjustable via LSS
Other data	
Supply voltage	9 .. 36 V DC
Residual ripple of supply voltage	≤ 5 %
Power consumption	< 1.4 W
Life expectancy	$1.5 * 10^9$ rotations at 3000 rpm
Weight	approx. 120 g

Note: Reverse polarity protection of the supply voltage, overvoltage, override and short circuit protection are provided.

[1] With mounted mating connector in corresponding protection class

Dimensions:

Solid shaft:

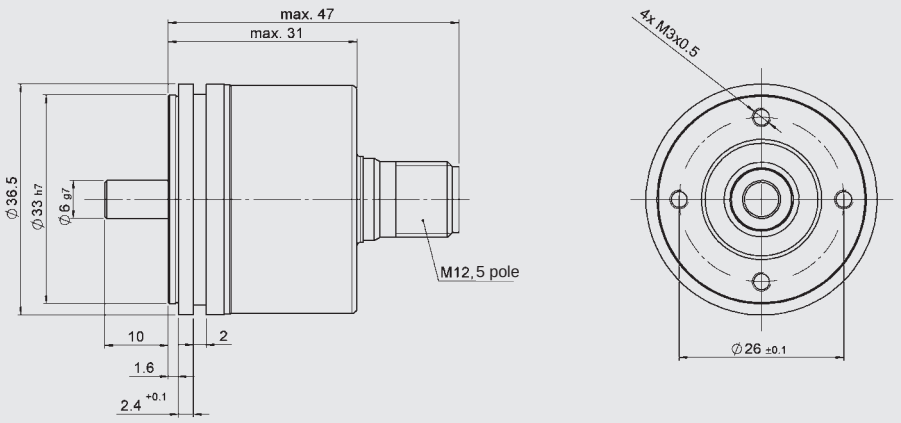

D-shape:

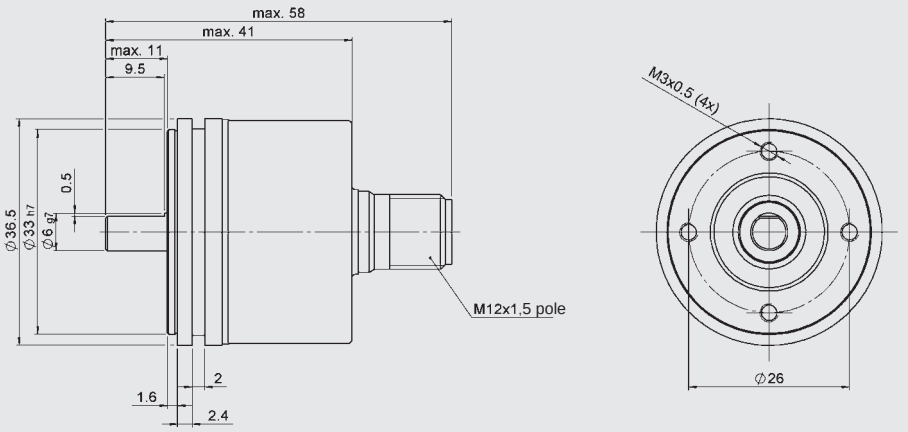

Model code:

HAT 14 36 - F11 - XXXX - P01 - XXXX - M01 - 000

Resolution
4 = 14 bit

Flange diameter
36 = 36 mm

Output signal
F11 = CANopen

Measuring range in ° and direction of rotation
360R = 360 °, clockwise
360L = 360 °, anticlockwise

Electrical connection
P01 = male M12x1, 5 pole axial

Mechanical connection
V106 = solid shaft, length 10 mm, diameter 6 mm
D106 = D-shape, length 10 mm, diameter 6 mm

Type of installation
M01 = synchro flange with 4 threaded holes

Modification
000 = standard

Accessories:
Appropriate accessories, such as elastic couplings and mating connectors, can be found in the Accessories brochure.

Pin connections:

M12x1, 5 pole

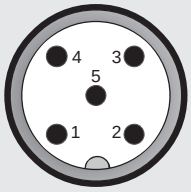

PIN	Signal	Description
1	n.c.	
2	$+U_B$	Supply+
3	$-U_B$	Supply-
4	CAN_H	Bus line dominant high
5	CAN_L	Bus line dominant low

Note:

The information in this brochure relates to the operating conditions and applications described.

For applications or operating conditions not described, please contact the relevant technical department.

Subject to technical modifications.

HYDAC ELECTRONIC GMBH
Hauptstr. 27, 66128 Saarbrücken
Germany
Telephone +49 (0)6897 509-01
Fax +49 (0)6897 509-1726
e-mail: electronic@hydac.com
Internet: www.hydac.com

Angle Sensor HAT 3800

Magnetic	Absolute	Singleturn, 18 bit

CANopen

Description:

HAT 3836 is a high resolution absolute measuring singleturn angle sensor.

Thanks to its non-contact magnetic measuring method and its robust design, HAT 3800 is ideally suited for rotational angle measurement in mobile machines as well as in stationary applications.

In the CANopen version, the measured signal is digitised and made available to the CAN field bus system via the CANopen protocol. The instrument parameters can be viewed and configured by the user via the CANopen object directory using standard CAN software.

The sensor is therefore ideally suited for mobile machines and stationary applications, especially wherever high-resolution data acquisition is required.

Especially for the use in public traffic vehicles, HAT 3800 has E13 approval (approved for road vehicles) in accordance with ECE type approval.

Technical data:

Input data	
Measuring range	0 .. 360 °
Direction of rotation	No orientation restrictions
Max. speed	1,000 rpm
Max. axial load	60 N
Max. radial load	100 N
Housing material	Stainless steel
Shaft material	Stainless steel
Output data	
Output signal	CANopen
Resolution	18 bit
Accuracy (at room temperature)	± 0.1 ° typ. ± 0.2 ° max.
Accuracy (over the temperature range)	± 0.05 ° / 10 K typ. ± 0.1 ° / 10 K max.
Repeatability	≤ ± 0.05 °
Angle increase	cw / ccw (factory-set)
Environmental conditions	
Operating temperature range	-40 .. +85 °C
Storage temperature range	-40 .. +85 °C
CE mark	EN 61000-6-1 / 2 / 3 / 4
E13 mark	E13*10R00*10R05*14137*00
Vibration resistance acc. to DIN EN 60068-2-6: 2010	7.5 mm (5 Hz ≤ f < 8.2 Hz) 2 g (8.2 Hz ≤ f < 2000 Hz)
Shock resistance acc. to DIN EN 60068-2-27: 2011	20 g (11 ms in 3 axes)
Protection class acc. to DIN EN 60529 [1]	IP 67
Protocol data for CANopen:	
Communication profile	CiA DS 301 V4.2.0
NMT-Services	CiA DSP 302 V4.1
Layer setting services and protocol	CiA DSP 305 V2.2
Encoder Device Profile	CiA DS 406 V3.2
Baud rates	10 kbit/s .. 1 Mbit/s acc. to DS305 V2.2
Transmission services - PDO - Transfer	 Measured value as 32 bit and float synchronous, asynchronous, cyclical
Node ID / baud rate	Adjustable via LSS
Other data	
Supply voltage	9 .. 36 V DC
Residual ripple of supply voltage	≤ 5 %
Power consumption	< 1.4 W
Life expectancy	1.5 * 10^9 rotations at 1000 rpm
Weight	approx. 180 g

Note: Reverse polarity protection of the supply voltage, overvoltage, override and short circuit protection are provided.

[1] With mounted mating connector in corresponding protection class

Dimensions:

Solid shaft:

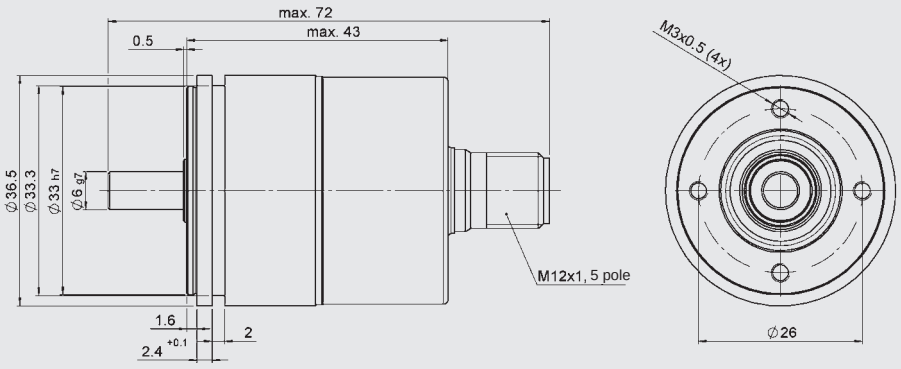

D-shape:

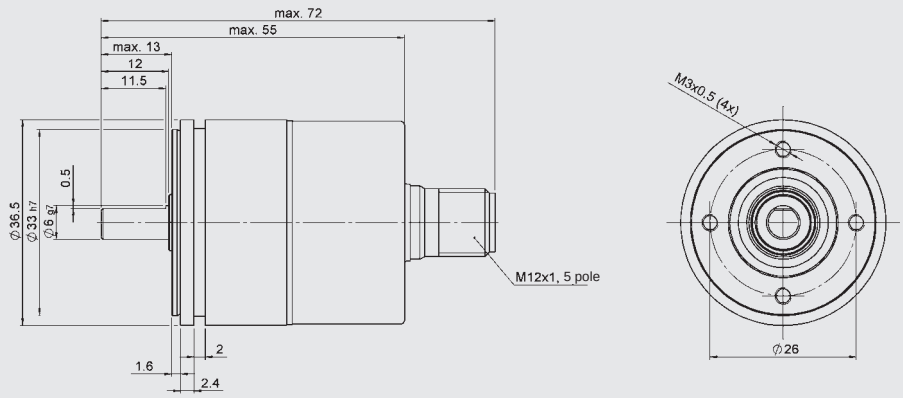

Pin connections:

M12x1, 5 pole

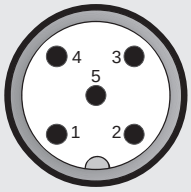

PIN	Signal	Description
1	n.c.	
2	$+U_B$	Supply+
3	$-U_B$	Supply-
4	CAN_H	Bus line dominant high
5	CAN_L	Bus line dominant low

Model code:

HAT 38 36 - F11 - XXXX - P01 - XXXX - M01 - 000

Resolution
8 = 18 bit

Flange diameter
36 = 36 mm

Output signal
F11 = CANopen

Measuring range in ° and direction of rotation
360R = 360 °, clockwise
360L = 360 °, anticlockwise

Electrical connection
P01 = male M12x1, 5 pole axial

Mechanical connection
V126 = solid shaft, length 12 mm, diameter 6 mm
D126 = D-shape, length 12 mm, diameter 6 mm

Type of installation
M01 = synchro flange with 4 threaded holes

Modification
000 = standard

Accessories:
Appropriate accessories, such as elastic couplings and mating connectors, can be found in the Accessories brochure.

Note:

The information in this brochure relates to the operating conditions and applications described.

For applications or operating conditions not described, please contact the relevant technical department.

Subject to technical modifications.

HYDAC ELECTRONIC GMBH
Hauptstr. 27, 66128 Saarbrücken
Germany
Telephone +49 (0)6897 509-01
Fax +49 (0)6897 509-1726
e-mail: electronic@hydac.com
Internet: www.hydac.com

Angle Sensor HAT 1200

Magnetic	Absolute	Singleturn, 12 bit

Analogue
IP 6K9K (two-chamber design)
Increased Functional Safety

E13 Functional Safety PL d SIL 2

Description:

HAT 1200 is an absolute measuring singleturn angle sensor.

Thanks to its non-contact magnetic measuring method and its robust design, the HAT 1200 is ideally suited for the measurement of the rotational angle in mobile machines.

Due to its two-chamber design, the electronic unit is completely encapsulated which means it meets IP 6K9K if the electrical connection is carried out accordingly.

The sensors meet the safety requirements according to SIL2 (IEC 61508) or PL d (ISO 13849), respectively.

The sensor is therefore suitable for a large variety of applications in the automobile industry and in mobile work machines, especially for applications with increased safety requirements.

Especially for the use in public traffic vehicles, HAT 1200 has E13 approval (approved for road vehicles) in accordance with ECE type approval.

Technical data:

Input data	
Measuring range	0 .. 360 °
Direction of rotation	No orientation restrictions
Max. speed	17,000 rpm
Max. axial load	60 N
Max. radial load	100 N
Housing material	Stainless steel
Shaft material	Stainless steel
Output data	
Output signal, permitted load resistance	4 .. 20 mA, load resist. max. 500 Ω
Resolution	12 bit
Accuracy (at room temperature)	± 0.15 ° typ. ± 0.3 ° max.
Accuracy (over the temperature range)	± 0.075 ° / 10 K typ. ± 0.15 ° / 10 K max.
Repeatability	≤ ± 0.05 °
Characteristic curve	Linear, cw / ccw (factory-set)
Environmental conditions	
Operating temperature range	-40 .. +85 °C
Storage temperature range	-40 .. +85 °C
CE mark	EN 61000-6-1 / 2 / 3 / 4
E13 mark	E13*10R00*10R05*14136*00
Vibration resistance acc. to DIN EN 60068-2-6: 2010	7.5 mm (5 Hz ≤ f < 8.2 Hz) 2 g (8.2 Hz ≤ f < 2000 Hz)
Shock resistance acc. to DIN EN 60068-2-27: 2011	20 g (11 ms in 3 axes)
Protection class acc. to DIN EN 60529 [1]	IP 67, IP 6K9K (electronics)
Safety-related data	
Performance level	
Based on	DIN EN ISO 13849-1:2008
PL	d
Architecture	Category 2
Safety Integrity Level	
Based on	DIN EN 61508:2010
SIL	2
Other data	
Supply voltage	9 .. 36 V DC
Residual ripple of supply voltage	≤ 5 %
Power consumption	< 1.4 W
Life expectancy	$1.5 * 10^9$ rotations at 3000 rpm
Weight	approx. 120 g

Note: Reverse polarity protection of the supply voltage, overvoltage, override and short circuit protection are provided.

[1] With mounted mating connector in corresponding protection class

Dimensions:

Solid shaft:

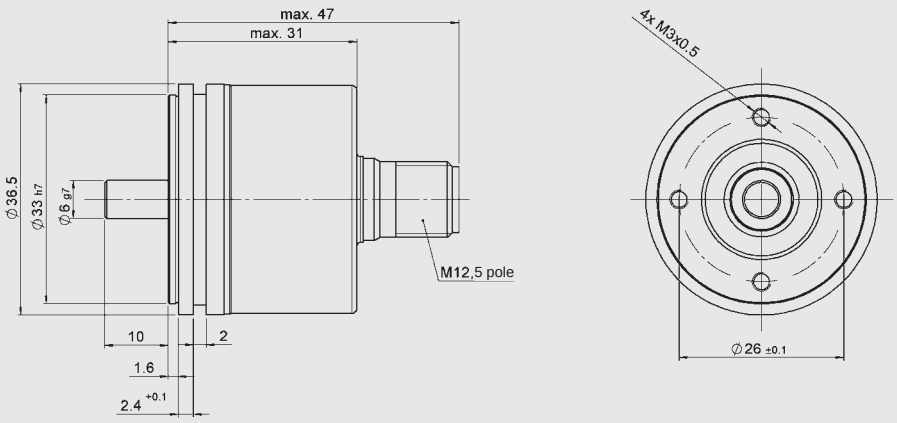

D-shape:

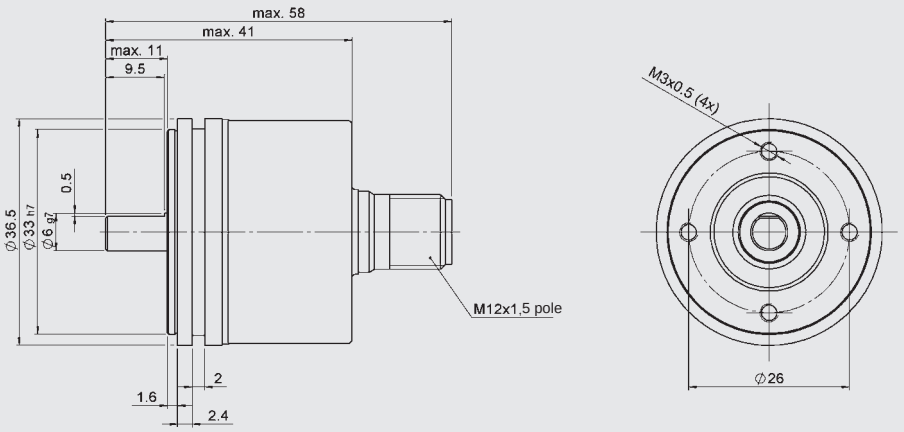

Model code:

HAT 12 36 - C01 - XXXX - P01 - XXXX - M01 - S2PD - 000

Resolution
2 = 12 bit

Flange diameter
36 = 36 mm

Output signal
C01 = analogue 4 .. 20 mA, 3-conductor

Measuring range in ° and direction of rotation
360R = 360 °, clockwise
360L = 360 °, anticlockwise

Electrical connection
P01 = male M12x1, 5 pole axial

Mechanical connection
V106 = solid shaft, length 10 mm, diameter 6 mm
D106 = D-shape, length 10 mm, diameter 6 mm

Type of installation
M01 = synchro flange with 4 threaded holes

Functional safety
S2PD = SIL2 acc. to IEC 61508 and PLd – Cat 2 acc. to DIN EN 13849-1

Modification
000 = standard

Accessories:
Appropriate accessories, such as elastic couplings and mating connectors, can be found in the Accessories brochure.

Pin connections:

M12x1, 5 pole

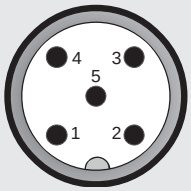

PIN	
1	$+U_B$
2	n.c.
3	0 V
4	Signal
5	n.c.

Note:

The information in this brochure relates to the operating conditions and applications described.

For applications or operating conditions not described, please contact the relevant technical department.

Subject to technical modifications.

HYDAC ELECTRONIC GMBH
Hauptstr. 27, 66128 Saarbrücken
Germany
Telephone +49 (0)6897 509-01
Fax +49 (0)6897 509-1726
e-mail: electronic@hydac.com
Internet: www.hydac.com

Angle Sensor HAT 1400

Magnetic	Absolute	Singleturn, 14 bit

CANopen Safety
IP 6K9K (two-chamber design)
Increased Functional Safety

CANopen safety easy to use

E13 Functional Safety PL d SIL 2

Description:

HAT 1400 is an absolute measuring singleturn angle sensor.

Thanks to its non-contact magnetic measuring method and its robust design, the HAT 1400 is ideally suited for the measurement of the rotational angle in mobile machines.

Due to its two-chamber design, the electronic unit is completely encapsulated which means it meets IP 6K9K if the electrical connection is carried out accordingly.

The sensors meet the safety requirements according to SIL2 (IEC 61508) or PL d (ISO 13849), respectively.

In the CANopen version, the measured signal is digitised and made available to the CAN field bus system via the CANopen protocol. The instrument parameters can be viewed and configured by the user via the CANopen object directory using standard CAN software.

The sensor is therefore suitable for a large variety of applications in the automobile industry and in mobile work machines, especially for applications with increased safety requirements.

Especially for the use in public traffic vehicles, HAT 1400 has E13 approval (approved for road vehicles) in accordance with ECE type approval.

Technical data:

Input data	
Measuring range	0 .. 360 °
Direction of rotation	No orientation restrictions
Max. speed	17,000 rpm
Max. axial load	60 N
Max. radial load	100 N
Housing material	Stainless steel
Shaft material	Stainless steel
Output data	
Output signal	CANopen Safety
Resolution	14 bit
Accuracy (at room temperature)	± 0.1 ° typ. ± 0.2 ° max.
Accuracy (over the temperature range)	± 0.05 ° / 10 K typ. ± 0.1 ° / 10 K max.
Repeatability	≤ ± 0.05 °
Angle increase	cw / ccw (factory-set)
Environmental conditions	
Operating temperature range	-40 .. +85 °C
Storage temperature range	-40 .. +85 °C
CE mark	EN 61000-6-1 / 2 / 3 / 4
E13 mark	E13*10R00*10R05*14136*00
Vibration resistance acc. to DIN EN 60068-2-6: 2010	7.5 mm (5 Hz ≤ f < 8.2 Hz) 2 g (8.2 Hz ≤ f < 2000 Hz)
Shock resistance acc. to DIN EN 60068-2-27: 2011	20 g (11 ms in 3 axes)
Protection class acc. to DIN EN 60529 [1]	IP 67, IP 6K9K (electronics)
Protocol data for CANopen Safety	
Communication profile	CiA DS 301 V4.2.0 / DS 304 V1.0.1
NMT-Services	CiA DSP 302 V4.1
Layer setting services and protocol	CiA DSP 305 V2.2
Encoder Device Profile	CiA DS 406 V3.2
Baud rates	10 kbit/s .. 1 Mbit/s acc. to DS305 V2.2
Transmission services - PDO - Transfer	 Measured value as 32 bit and float synchronous, asynchronous, cyclical
Node ID / baud rate	Adjustable via LSS
Safety-related data	
Performance level	
Based on	DIN EN ISO 13849-1:2008
PL	d
Architecture	Category 2
Safety Integrity Level	
Based on	DIN EN 61508:2010
SIL	2
Other data	
Supply voltage	9 .. 36 V DC
Residual ripple of supply voltage	≤ 5 %
Power consumption	< 1.4 W
Life expectancy	1.5 * 10^9 rotations at 3000 rpm
Weight	approx. 120 g

Note: Reverse polarity protection of the supply voltage, overvoltage, override and short circuit protection are provided.

[1] With mounted mating connector in corresponding protection class

Dimensions:

Solid shaft:

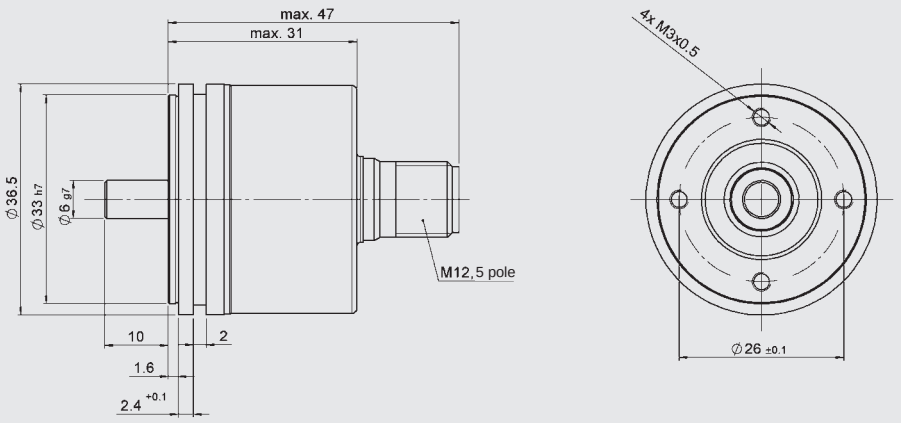

D-shape:

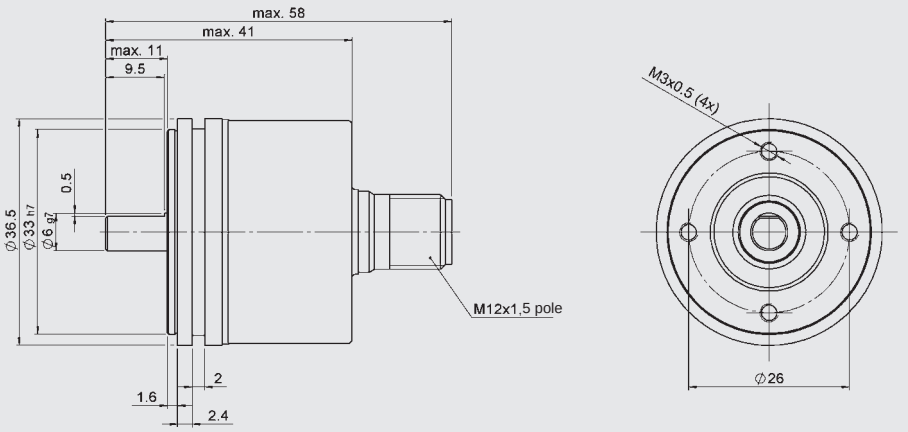

Model code:

HAT 14 36 - F13 - XXXX - P01 - XXXX - M01 - S2PD - 000

Resolution
4 = 14 bit

Flange diameter
36 = 36 mm

Output signal
F13 = CANopen Safety

Measuring range in ° and direction of rotation
360R = 360 °, clockwise
360L = 360 °, anticlockwise

Electrical connection
P01 = male M12x1, 5 pole axial

Mechanical connection
V106 = solid shaft, length 10 mm, diameter 6 mm
D106 = D-shape, length 10 mm, diameter 6 mm

Type of installation
M01 = synchro flange with 4 threaded holes

Functional safety
S2PD = SIL2 acc. to IEC 61508 and PLd – Cat 2 acc. to DIN EN 13849-1

Modification
000 = standard

Accessories:
Appropriate accessories, such as elastic couplings and mating connectors, can be found in the Accessories brochure.

Pin connections:

M12x1, 5 pole

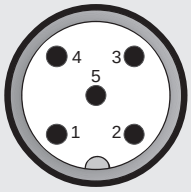

PIN	Signal	Description
1	n.c.	
2	$+U_B$	Supply+
3	$-U_B$	Supply-
4	CAN_H	Bus line dominant high
5	CAN_L	Bus line dominant low

Note:

The information in this brochure relates to the operating conditions and applications described.

For applications or operating conditions not described, please contact the relevant technical department.

Subject to technical modifications.

HYDAC ELECTRONIC GMBH
Hauptstr. 27, 66128 Saarbrücken
Germany
Telephone +49 (0)6897 509-01
Fax +49 (0)6897 509-1726
e-mail: electronic@hydac.com
Internet: www.hydac.com

Angle Sensor HAT 3800

Magnetic	Absolute	Singleturn, 18 bit

CANopen safety easy to use

E13 Functional Safety PL d SIL 2

CANopen Safety
Increased Functional Safety

Description:

HAT 3836 is a high resolution absolute measuring singleturn angle sensor.

Thanks to its non-contact magnetic measuring method and its robust design, HAT 3800 is ideally suited for rotational angle measurement in mobile machines as well as in stationary applications.

The sensor version designed for applications with increased functional safety meets the safety requirements according to SIL2 (IEC 61508) or PL d (ISO 13849), respectively.

In the CANopen version, the measured signal is digitised and made available to the CAN field bus system via the CANopen protocol. The instrument parameters can be viewed and configured by the user via the CANopen object directory using standard CAN software.

The sensor is therefore ideally suited for mobile machines and stationary applications, especially in applications with increased safety requirements and wherever high-resolution data acquisition is required.

Especially for the use in public traffic vehicles, HAT 3800 has E13 approval (approved for road vehicles) in accordance with ECE type approval.

Technical data:

Input data	
Measuring range	0 .. 360 °
Direction of rotation	No orientation restrictions
Max. speed	1,000 rpm
Max. axial load	60 N
Max. radial load	100 N
Housing material	Stainless steel
Shaft material	Stainless steel
Output data	
Output signal	CANopen Safety
Resolution	18 bit
Accuracy (at room temperature)	± 0.1 ° typ. ± 0.2 ° max.
Accuracy (over the temperature range)	± 0.05 ° / 10 K typ. ± 0.1 ° / 10 K max.
Repeatability	≤ ± 0.05 °
Angle increase	cw / ccw (factory-set)
Environmental conditions	
Operating temperature range	-40 .. +85 °C
Storage temperature range	-40 .. +85 °C
CE mark	EN 61000-6-1 / 2 / 3 / 4
E13 mark	E13*10R00*10R05*14137*00
Vibration resistance acc. to DIN EN 60068-2-6: 2010	7.5 mm (5 Hz ≤ f < 8.2 Hz) 2 g (8.2 Hz ≤ f < 2000 Hz)
Shock resistance acc. to DIN EN 60068-2-27: 2011	20 g (11 ms in 3 axes)
Protection class acc. to DIN EN 60529 [1]	IP 67
Protocol data for CANopen Safety	
Communication profile	CiA DS 301 V4.2.0 / DS 304 V1.0.1
NMT-Services	CiA DSP 302 V4.1
Layer setting services and protocol	CiA DSP 305 V2.2
Encoder Device Profile	CiA DS 406 V3.2
Baud rates	10 kbit/s .. 1 Mbit/s acc. to DS305 V2.2
Transmission services - PDO - Transfer	 Measured value as 32 bit and float synchronous, asynchronous, cyclical
Node ID / baud rate	Adjustable via LSS
Safety-related data	
Performance level	
Based on	DIN EN ISO 13849-1:2008
PL	d
Architecture	Category 2
Safety Integrity Level	
Based on	DIN EN 61508:2010
SIL	2
Other data	
Supply voltage	9 .. 36 V DC
Residual ripple of supply voltage	≤ 5 %
Power consumption	< 1.4 W
Life expectancy	1.5 * 10^9 rotations at 1000 rpm
Weight	approx. 180 g

Note: Reverse polarity protection of the supply voltage, overvoltage, override and short circuit protection are provided.

[1] With mounted mating connector in corresponding protection class

Dimensions:

Solid shaft:

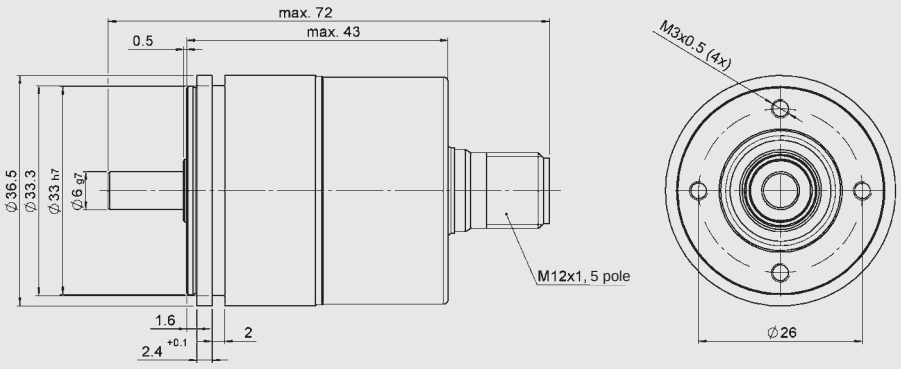

D-shape:

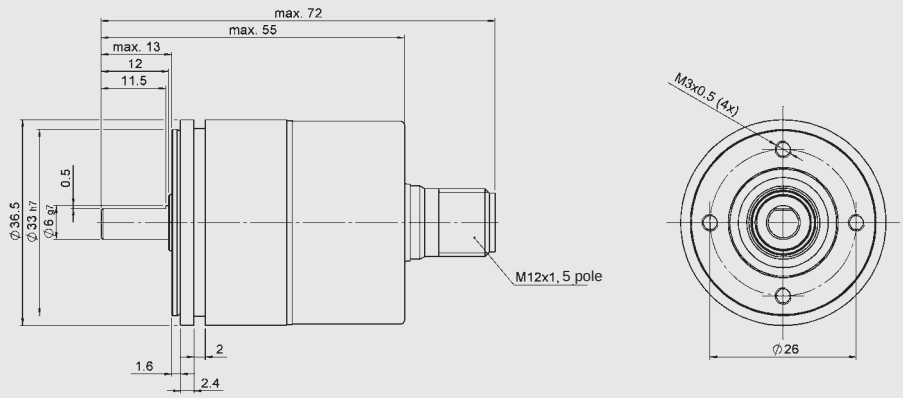

Pin connections:

M12x1, 5 pole

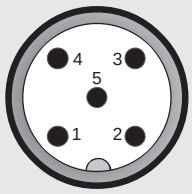

PIN	Signal	Description
1	n.c.	
2	$+U_B$	Supply+
3	$-U_B$	Supply-
4	CAN_H	Bus line dominant high
5	CAN_L	Bus line dominant low

Model code:

HAT 38 36 - F13 - XXXX - P01 - XXXX - M01 - S2PD - 000

Resolution
8 = 18 bit

Flange diameter
36 = 36 mm

Output signal
F13 = CANopen Safety

Measuring range in ° and direction of rotation
360R = 360 °, clockwise
360L = 360 °, anticlockwise

Electrical connection
P01 = male M12x1, 5 pole axial

Mechanical connection
V126 = solid shaft, length 12 mm, diameter 6 mm
D126 = D-shape, length 12 mm, diameter 6 mm

Type of installation
M01 = synchro flange with 4 threaded holes

Functional safety
S2PD = SIL2 acc. to IEC 61508 and PLd – Cat 2 acc. to DIN EN 13849-1

Modification
000 = standard

Accessories:
Appropriate accessories, such as elastic couplings and mating connectors, can be found in the Accessories brochure.

Note:

The information in this brochure relates to the operating conditions and applications described.

For applications or operating conditions not described, please contact the relevant technical department.

Subject to technical modifications.

HYDAC ELECTRONIC GMBH
Hauptstr. 27, 66128 Saarbrücken
Germany
Telephone +49 (0)6897 509-01
Fax +49 (0)6897 509-1726
e-mail: electronic@hydac.com
Internet: www.hydac.com

INCLINOMETERS [10]

			Page
HIT 1500		CAN	429
HIT 1500	Functional safety	CAN	431

Inclinometer
HIT 1500

MEMS Technology | **Motion compensated**

CANopen

Description:

In many applications, the measurement of the angle of inclination is required in order to ensure safe machine functions and to control processes.

HIT 1500 was developed in particular for the special use in dynamic system.

By using both an accelerometer and an additional gyroscope based on MEMS technology (Micro-Electro-Mechanical System), two measured variables which are entirely independent from one another from the physical point of view are detected by the HIT 1500 and combined.

A motion compensation is performed hence the contouring error, which occurs in damped or low-pass filtered systems, is avoided.

Thus, the HIT 1500 provides excellent dynamic characteristics and is therefore particularly suited for active orientation, stabilisation, and control of the inclination of mobile machines such as boom lifts and work platforms, cranes and mobile cranes, construction and drilling systems, agricultural, and municipal machines, etc.

Especially for the use in public traffic vehicles, HIT 1500 is approved for road vehicles according to ECE type approval.

Technical data:

Input data	
Inclination	
Axes	1/ 2
Measuring range (“slope long”)	±15 ° / ±60 ° / ±120 ° / ±180 °
Measuring range (“slope lateral”)	±15 ° / ±60 ° / ±90 °
Resolution	0.01 °
Dynamics	30 .. 50 Hz (-3 dB)
Update rate	200 Hz
Accuracy (static RMS)	< 0.1 ° over the entire measuring range
Temperature coefficient	Active temperature control, warm-up phase depending on ambient temperature [1)]
Acceleration	
Axes	3
Measurement range	± 3 g in 3 axes
Resolution	0.01 m/s²
Cutoff frequency	30 .. 50 Hz
Gyro	
Axes	3
Measurement range	± 250 °/s in 3 axes
Resolution	0.2 mrad/s
Cutoff frequency	30 .. 50 Hz
Output data	
Output signal	CANopen
Environmental conditions	
Compensated temperature range	-20 .. +60 °C
Operating temperature range	-40 .. +85 °C
Storage temperature range	-40 .. +85 °C
CE mark	EN 61000-6-1 / 2 / 3 / 4 (see Declaration of Conformity)
Vibration resistance acc. to DIN EN 60068-2-6 at 10 .. 500 Hz	5 g (criteria B)
Shock resistance acc. to DIN EN 60068-2-27	20 g, 11 ms half sine (criterion B) 50 g, 6 ms half sine (criterion B)
Protection class [2)] acc. to DIN EN 60529 ISO 20653	IP66, IP67, IP69 IP6K9K
Protocol data for CANopen	
Communication profile	CiA DS 301 V4.2
NMT-Services	CiA DSP 302 V4.1
Layer setting services and protocol	CiA DSP 305 V2.2
Device profile	CiA DS 410 V1.3
Baud rates	10 kbit .. 1 Mbit acc. to. CiA DS305 V2.2
Transmission services - PDO - Transfer	 Measured value as 16 bit value, status synchronous, asynchronous, cyclical
Node Id / Baudrate Default setting	Can be set via Manufacturer Specific Profile & LSS 250 kbps / Node ID 1
Other data	
Supply voltage	9 .. 36 V DC
Residual ripple of supply voltage	< 5 %
Power consumption	< 5 W
Housing material	Aluminium, anodized
Weight	~ 400 g

Note: Reverse polarity protection of the supply voltage and overvoltage protection are provided. Sensors for applications with increased functional safety on demand.

[1)] e.g. approx. 40 s at 20 °C, < 2 min at 0 °C
[2)] With mounted mating connector in corresponding protection class

Dimensions:

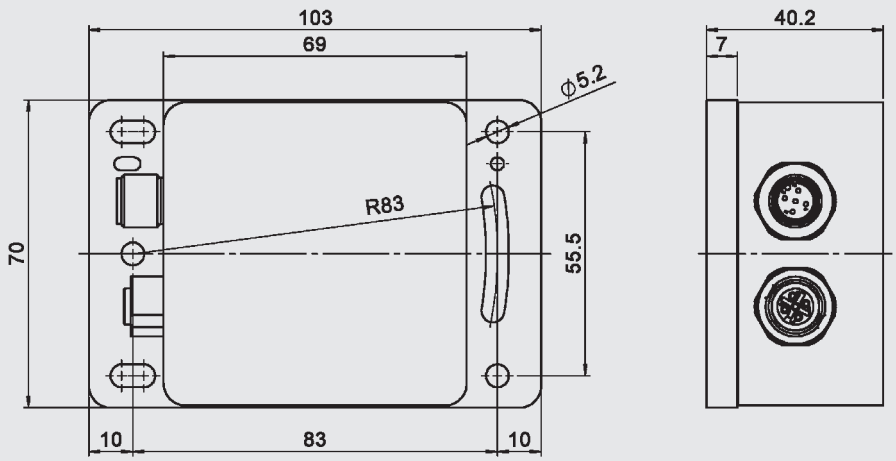

Coordinate system and direction of rotation:

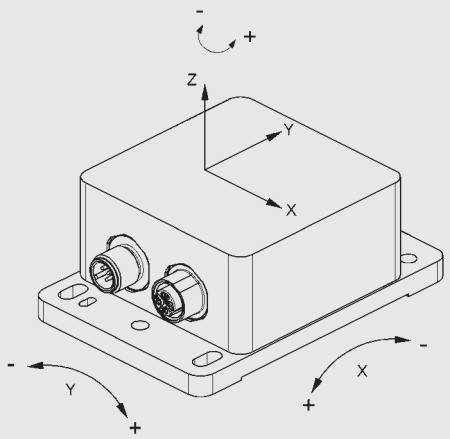

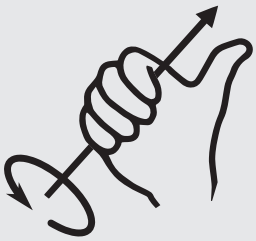

Model code:

HIT 1508 – F11 – X – XXX – X – XX – X – 000

Motion compensation
5 = with

Electrical connection
8 = male M12x1, 5 pole

Output signal
F11 = CANopen

Primary inclination axis (slope long)
X / Y / Z

Measuring range rotation about primary axis in ° [1)]
015; 060; 120; 180

Secondary inclination axis (slope lateral)
X / Y / Z / 0 (0 = not available)

Measuring range rotation about secondary axis in ° [1)]
15; 60; 90; 00 (00 = axis not available)

Additional CAN socket
0 = none
1 = female M12x1, 5 pole

Modification number
000 = standard

Note:
[1)] Other measuring ranges on request

Pin connections:

Male M12x1, 5 pole

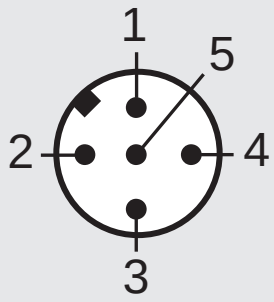

Female M12x1, 5 pole

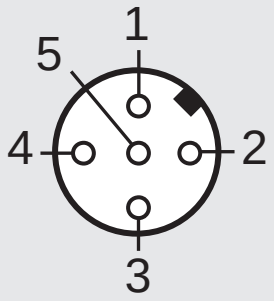

Pin	Signal	Description
1	CAN_SHLD	CAN shield
2	CAN_V+	CAN external positive supply
3	CAN_GND	Ground / 0 V / V-
4	CAN_H	CAN_H bus line (dominant high)
5	CAN_L	CAN_L bus line (dominant low)

Note:

The information in this brochure relates to the operating conditions and applications described.

For applications or operating conditions not described, please contact the relevant technical department.

Subject to technical modifications.

HYDAC ELECTRONIC GMBH
Hauptstraße 27, 66128 Saarbrücken
Germany
Telephone +49 (0)6897 509-01
Fax +49 (0)6897 509-1726
E-mail: electronic@hydac.com
Internet: www.hydac.com

HYDAC INTERNATIONAL

Inclinometer HIT 1500

MEMS Technology | Motion compensated

Increased Functional Safety CANopen Safety

CANopen safety easy to use
Functional Safety PL d SIL 2

Description:

In many applications, the measurement of the angle of inclination is required in order to ensure safe machine functions and to control processes.

HIT 1500 was developed in particular for the special use in dynamic system.

In the version for use in applications with enhanced functional safety, the data can be transmitted via the CANopen Safety protocol.

The inclinometers are particularly suited for application in safety circuits according Functional Safety in Machines and Systems up to SIL 2 (IEC 61508) or PL d depending on the version category 2 or 3 (ISO 13849), respectively.

By using both an accelerometer and an additional gyroscope based on MEMS technology (Micro-Electro-Mechanical System), two measured variables which are entirely independent from one another from the physical point of view are detected by the HIT 1500 and combined by the device.

A motion compensation is performed hence the contouring error, which occurs in damped or low-pass filtered systems, is avoided.

Thus, the HIT 1500 provides excellent dynamic characteristics and is therefore particularly suited for the active orientation, stabilisation and control of the inclination of mobile machines such as boom lifts and work platforms, cranes and mobile cranes, construction and drilling systems, agricultural, and municipal machines, etc.

Especially for the use in public traffic vehicles, HIT 1500 is approved for road vehicles according to ECE type approval.

Technical data:

Input data	
Inclination	
Axes	1/ 2
Measuring range (“slope long”)	±15 ° / ±60 ° / ±120 ° / ±180 °
Measuring range (“slope lateral”)	±15 ° / ±60 ° / ±90 °
Resolution	0.01 °
Dynamics	30 .. 50 Hz (-3 dB)
Update rate	200 Hz
Accuracy (static RMS)	< 0.1 ° over the entire measuring range
Temperature coefficient	Active temperature control, warm-up phase depending on ambient temperature [1]
Acceleration	
Axes	3
Measurement range	± 3 g in 3 axes
Resolution	0.01 m/s²
Cutoff frequency	30 .. 50 Hz
Gyro	
Axes	3
Measurement range	± 250 °/s in 3 axes
Resolution	0.2 mrad/s
Cutoff frequency	30 .. 50 Hz
Output data	
Output signal	CANopen Safety
Environmental conditions	
Compensated temperature range	-20 .. +60 °C
Operating temperature range	-40 .. +85 °C
Storage temperature range	-40 .. +85 °C
CE mark	EN 61000-6-1 / 2 / 3 / 4 (see Declaration of Conformity)
Vibration resistance acc. to DIN EN 60068-2-6 at 10 .. 500 Hz	5 g (criteria B)
Shock resistance acc. to DIN EN 60068-2-27	20 g, 11 ms half sine (criterion B) 50 g, 6 ms half sine (criterion B)
Protection class [2] acc. to DIN EN 60529 ISO 20653	IP66, IP67, IP69 IP6K9K
Protocol data for CANopen Safety	
Communication profile	CiA DS 301 V4.2
NMT-Services	CiA DSP 302 V4.1
Layer setting services and protocol	CiA DSP 305 V2.2
Device profile	CiA DS 410 V1.3
CANopen Safety	CiA DS 410 V1.0
Baud rates	10 kbit .. 1 Mbit acc. to. CiA DS 305 V2.2
Transmission services - SRDO (inclination) / PDO - Transfer	 Measured value as 16 bit value, status synchronous, asynchronous, cyclical
Node ID / baud rate Default setting	Can be set via Manufacturer Specific Profile & LSS 250 kbps / Node ID 1
Safety-relevant data	
Performance Level	
Based on PL	DIN EN ISO 13849-1:2015
PL	PL = d
Architecture	Cat 2 or Cat 3
Safety Integrity Level	
Based on SIL	DIN EN 61508:2010
SIL	2
Architecture	1oo1 / 1oo2
Other data	
Supply voltage	9 .. 36 V DC
Residual ripple supply voltage	< 5 %
Power consumption	< 5 W
Housing material	Aluminium, anodized
Weight	~ 400 g

Note: Reverse polarity protection of the supply voltage and overvoltage protection are provided.

[1] e.g. approx. 40 s at 20 °C, < 2 min at 0 °C
[2] With mounted mating connector in corresponding protection class

Dimensions:

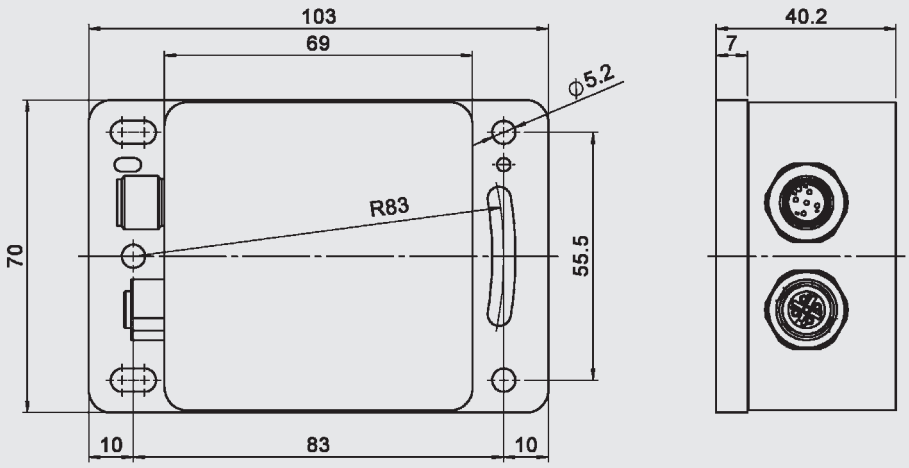

Coordinate system and direction of rotation:

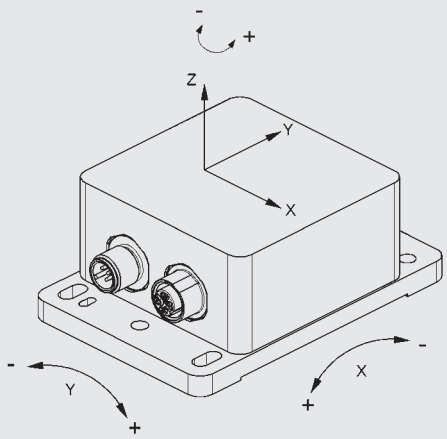

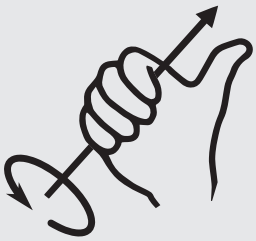

Model code:

HIT 1508 - F13 - X - XXX - X - XX - X - S2PD - X - 000

Motion compensation
5 = included

Electrical connection
8 = male M12x1, 5 pole

Output signal
F13 = CANopen Safety

Primary inclination axis (slope long)
X / Y / Z

Measuring range rotation about primary axis in ° [1)]
015; 060; 120; 180

Secondary inclination axis (slope lateral)
X / Y / Z / 0 (0 = not available)

Measuring range rotation about secondary axis in ° [1)]
15; 60; 90; 00 (00 = axis not available)

Additional CAN socket
0 = none
1 = female M12x1, 5 pole

Functional safety
S2PD = SIL2 acc. to IEC 61508 and PLd acc. to DIN EN 13849-1

Design architecture
2 = category 2 acc. to DIN EN 13849-1
3 = category 3 acc. to DIN EN 13849-1

Modification number
000 = standard

Note:
[1)] Other measuring ranges on request

Pin connections:

Male M12x1, 5 pole

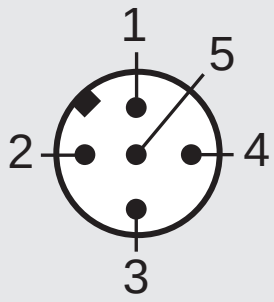

Female M12x1, 5 pole

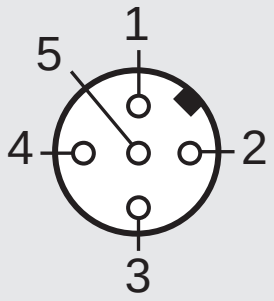

Pin	Signal	Description
1	CAN_SHLD	CAN shield
2	CAN_V+	CAN external positive supply
3	CAN_GND	Ground / 0 V / V-
4	CAN_H	CAN_H bus line (dominant high)
5	CAN_L	CAN_L bus line (dominant low)

Note:

The information in this brochure relates to the operating conditions and applications described.

For applications or operating conditions not described, please contact the relevant technical department.

Subject to technical modifications.

HYDAC ELECTRONIC GMBH
Hauptstraße 27, 66128 Saarbrücken
Germany
Telephone +49 (0)6897 509-01
Fax +49 (0)6897 509-1726
E-mail: electronic@hydac.com
Internet: www.hydac.com

CONDITION MONITORING PRODUCTS [11]

		Page
CMU 1000	CM unit	435
CSI-B-2	CM interface module	439
AS 1000		441
AS 3000	Display	443
EY 1356		445
HLB 1400		447

HYDAC INTERNATIONAL

Condition Monitoring Unit CMU 1000

Programmable | **8 analogue inputs**

Ethernet interface

Description:

The CMU 1000 is an electronic evaluation unit designed for permanent online condition monitoring of machines and systems. In order to achieve this, the device must be supplied with relevant data which is recorded by the sensors connected to it.

This recorded data (processed or unprocessed) can be transferred by the CMU 1000 via different interfaces or as an analogue value to other devices and/or monitoring levels.

The CMU 1000 processes the application program stored in it continuously and cyclically like a PLC. The user creates this program simply and conveniently on a PC using the **CM Editor** developed for this purpose and then uploads it to the CMU 1000.

The **CM Editor** is part of the HYDAC PC software **CMWIN Version V03 or higher** (supplied) and it provides the various tools and functions in accordance with IEC 61131 for designing, integrating and testing the user program using “drag and drop” operations. The device is equipped with a background-lit LCD display as well as three different-coloured LEDs for the status display and presentation of messages and values. The CMU 1000 is operated and data is input on site using a built-in key pad within the menu structure of the device. The CMU 1000 is designed for use in machines in both the stationary and mobile sectors. It is possible to connect easily to higher-level control, monitoring and bus systems using the built-in interfaces or in combination with an additional coupling module.

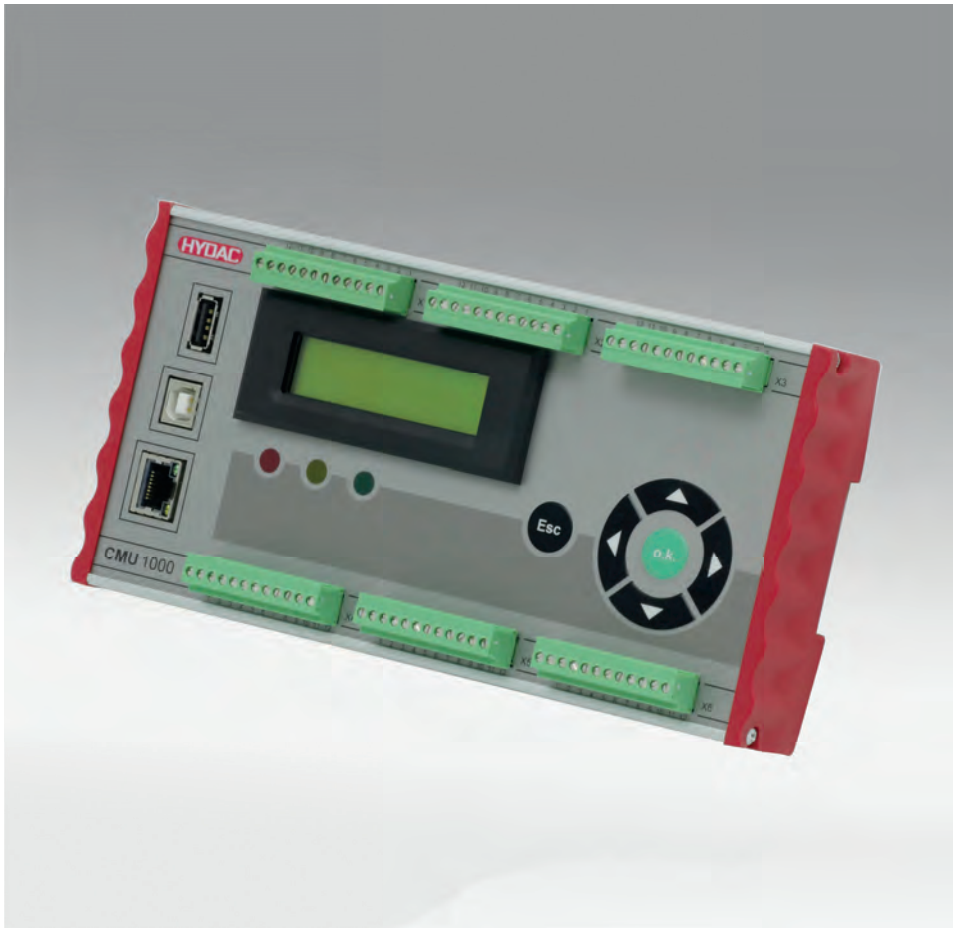

Special features:

- 8 input channels for HSI or SMART sensors
- 8 input channels for analogue sensors
- 4 input channels for digital signals
- 2 output channels for analogue signals
- 4 relay switching outputs with changeover contacts
- USB slave interface for PC connection
- USB Master interface for storing the measured data on a commercially available USB memory stick.
- Ethernet interface
- RS 232 interface
- 2-line LCD display (2 x 16 characters) for display of measured data and status and/or error messages
- 3 freely programmable, different-coloured LEDs for status display (red, yellow, green)
- Simple operation via navigation cross
- Creation of customised application programs using the PC software CMWIN supplied

Technical data:

Supply		
Input voltage	18.0 .. 35.0 V DC	
Current consumption	max. 1.5 A	
Reverse polarity protection	-30 V	
Insulation voltage	+40 V	
Connection of sensors	Up to 8 sensors with HSI functionality or up to 8 SMART sensors [1] and in addition up to 8 analogue sensors and up to 4 digital sensors 4 x digital / 2 x digital + 2 x frequency / 3 x digital + 1 x frequency	
Analogue inputs		
Channels I and J (accuracy)	4 .. 20 mA 0 .. 20 mA 0.5 .. 4.5 V 0 .. 10 V	(≤ ± 0.1 % FS max.) (≤ ± 0.1 % FS max.) (≤ ± 0.1 % FS max.) (≤ ± 0.1 % FS max.)
Channels K and L (accuracy)	4 .. 20 mA 0 .. 20 mA 0.5 .. 4.5 V 0 .. 50 V -10 .. +10 V	(≤ ± 0.1 % FS max.) (≤ ± 0.1 % FS max.) (≤ ± 0.1 % FS max.) (≤ ± 0.1 % FS max.) (≤ ± 0.2 % FS max.) L only!
Channels M and N (accuracy)	4 .. 20 mA 0 .. 20 mA 0.5 .. 4.5 V	(≤ ± 0.1 % FS max.) (≤ ± 0.1 % FS max.) (≤ ± 0.1 % FS max.)
Channels O and P (accuracy)	4 .. 20 mA 0 .. 20 mA 0.5 .. 4.5 V -10 .. +10 V	(≤ ± 0.1 % FS max.) (≤ ± 0.1 % FS max.) (≤ ± 0.1 % FS max.) (≤ ± 0.2 % FS max.) P only!
Digital inputs		
Quantity	4, of which 2 are for frequency measurements (channels Q and R)	
Trigger threshold	approx. 2 V	
Dynamics	30 kHz	
Measurement channels		
Quantity	32 – one measurement channel can be a value of a connected sensor (also a subchannel of a SMART sensor) or a value derived (calculated) from sensor data.	
Analogue outputs		
Quantity	2	
Type	Individually selectable, current (4 .. 20 mA) or voltage (0 .. 10 V)	
Digital outputs		
Quantity	4	
Type	Relay output, change-over contact	
Switching capacity	30 V DC / 1 A	
Calculation unit		
Analogue value recording	12 bit A/D converter	

Note: [1] SMART sensors (Condition Monitoring Sensors) are a generation of sensors from HYDAC which can provide a variety of different measured values.

Interfaces	
Keypad	● 4 arrow keys (up, down, right, left) ● OK key ● ESC key
Display (with LED backlight)	● Two-line LCD display (2 x 16 characters) ● Additional display of status information via 3 different-coloured LEDs possible
USB mass storage device [2]	● USB 1.1 / USB 2.0 full speed interface for connection of a mass storage device (memory stick) ● Female connection type “A”.
Ethernet, supported protocols	● RJ 45 8/8 Ethernet interface ● HTTP Server ● TCP/IP
Serial Interface 0 (UART 0)	● Implementing an RS 232 or an HSI master interface ● Change-over user-programmable ● Connection via plug-in terminals ● No handshake lines
HSI Master	Cascading the CMU
USB device	● USB 1.1 / USB 2.0 full speed interface for connecting a PC/laptop for configuration of the CMU ● Female connection type “B”.
Cycle time	
Determined independantly at program start Current cycle time can be displayed in CM Editor	
Operating and environmental conditions	
Operating temperature	-20 .. +70 °C
Storage temperature	-30 .. +80 °C
Relative humidity	0 .. 70 %, non-condensing
Dimensions and weight	
Dimensions	approx. 212 x 106 x 36 mm
Weight	approx. 600 g
Technical standards	
EMC	EN 61000-6-1 / 2 / 3 / 4
Safety	EN 61010
Protection class	IP 40

Note.: [2] Recorded data from the CMU can be transferred to a memory stick via this interface. The USB host supports exclusively mass storage devices.

CM Editor:

The CM Editor is part of the HYDAC PC software **CMWIN**, Version 03 or higher, and provides a wide variety of tools and functions for designing, integrating and testing the application program. An application program consists of many individual functions which can be linked together. During subsequent operation, this user program is processed as for a PLC, cyclically. The program is created according to the IEC 61131 (the standard for PLC programming).

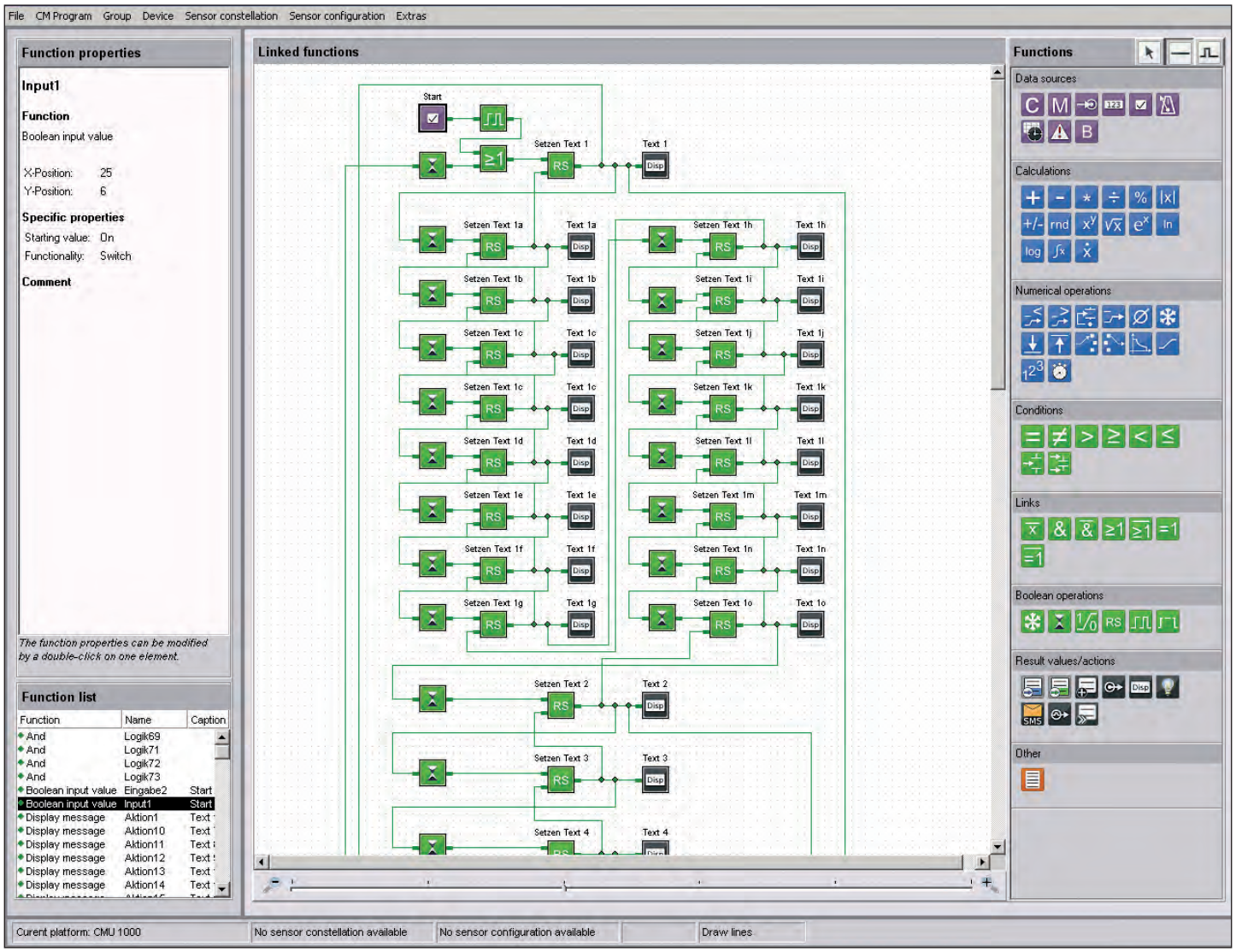

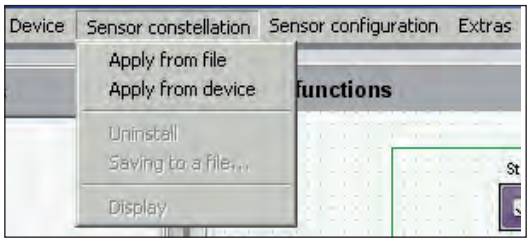

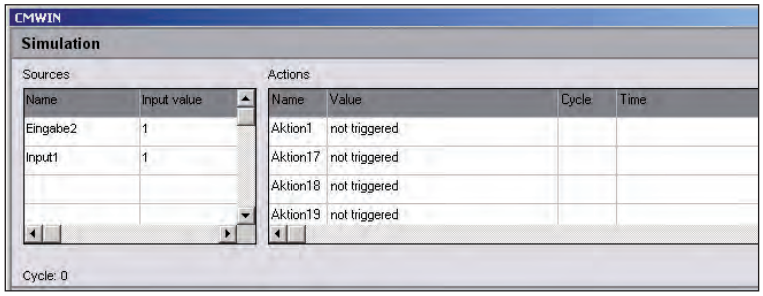

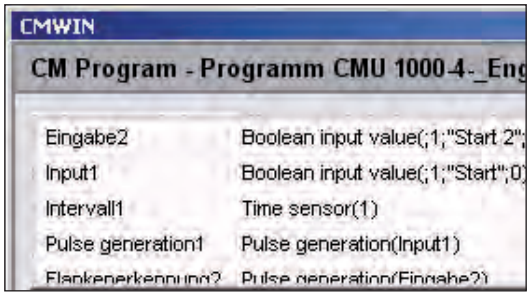

Block circuit diagram:

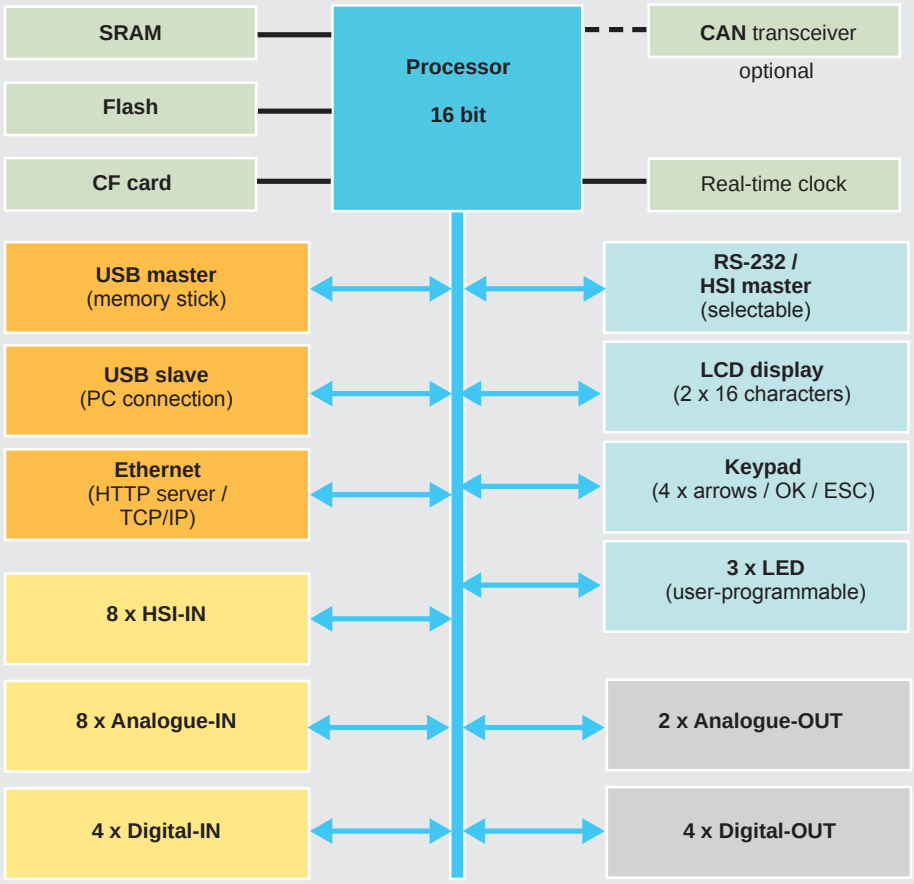

Dimensions:

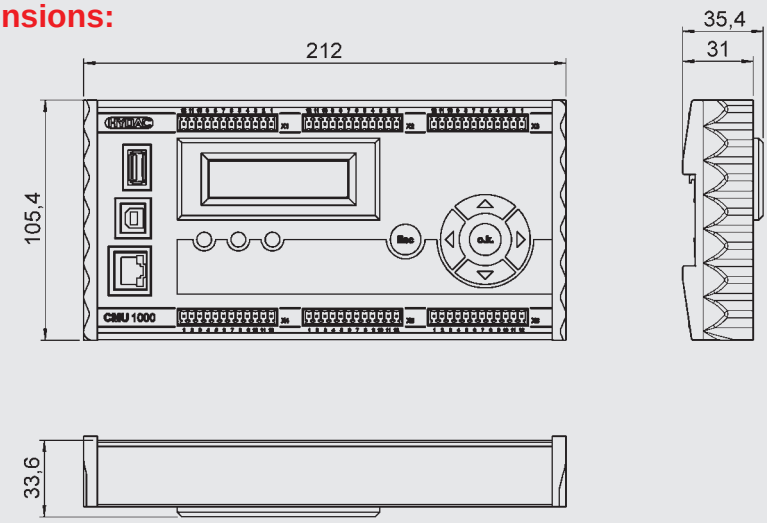

Note:

The information in this brochure relates to the operating conditions and applications described.

For applications or operating conditions not described, please contact the relevant technical department.

Subject to technical modifications.

Model code:

CMU 1000 – 000 – X

Modification number
000 = standard

User interface and documentation
D = German
E = English
F = French

Accessories:
Appropriate accessories, such as sensor lines for the electrical connection, can be found in the Accessories brochure.

HYDAC ELECTRONIC GMBH
Hauptstraße 27, 66128 Saarbrücken
Germany
Telephone +49 (0)6897 509-01
Fax +49 (0)6897 509-1726
E-mail: electronic@hydac.com
Internet: www.hydac.com

Condition Monitoring Interface Module CSI-B-2

RS 232
RS 485
HSI

Description:

The Condition Monitoring Interface Module CSI-B-2 is an additional segment of the HYDAC condition monitoring concept which connects the sensor level with the interpretation level.

It is a universally utilisable electronic device for the conversion of the HSI signal from HYDAC SMART sensors into a standardised PC signal.

Using the HYDAC „**CMWIN**“ PC software, it is therefore possible to read the data and measured values of the connected SMART sensor directly.

It remains possible to read out the long-term memory and to make settings and parameterisations on the connected sensor (the setting opportunities are sensor-dependent).

The HSI signal can be converted into an RS 232 or an RS 485 signal. The CSI-B-2 can be connected to any PC via the RS 232 interface, and possibly an additional standard RS 232-USB adapter [1].

The RS 485 interface and appropriate additional coupling modules can also be used to connect to higher-level control and/or bus systems.

[1] RS 232/USB adapter is not supplied with the device.

Technical data:

Input data	
HSI interface	HYDAC Sensor Interface for digital connection of SMART sensors [2] - male connector X2
Output data	
Signal output	Switchable: RS 485 half duplex or RS 232 - male connector X1 (RS 485) - SUB-D 9 pole socket (RS 232)
Environmental conditions	
Operating temperature range	-25 .. +85 °C
Storage temperature range	-30 .. +85 °C
Relative humidity	0 .. 70 %, non-condensing
CE mark	EN 61000-6-1 / 2 / 3 / 4
Protection class acc. to DIN EN 60529	IP 40
Other data	
Supply voltage of the module	18 .. 35 V DC (male X1)
Current consumption (module + sensor)	30 mA .. 300 mA max. (depending on the supply voltage and the sensor connected)
Sensor supply	15 V DC ± 5 % / 300 mA max. at 23 °C (male X2)
Electrical connection	
Cross section of connection	Max. 1.5 mm^2
X1: module supply + RS 232 / RS 485	Plug-in terminal block, 8 pole RM 3.5
X2: sensor supply + HSI	Plug-in terminal block, 5 pole RM 3.5
SUB-D: RS 232	9 pole socket with securing screws
Selection of conversion mode	Selection of HSI - RS 232 or HSI - RS 485 via jumper (bridge): X1.3 - X1.4 open: HSI - RS 232 X1.3 - X1.4 closed: HSI - RS 485
Indication of active conversion mode	Green LED: HSI - RS 232 Yellow LED: HSI - RS 485
Dimensions and weight	
Housing	Approx. 55 x 106 x 34 mm Housing to be mounted on rails (35 mm) acc. to DIN EN 60715 TH 35 (formerly DIN EN 50022)
Weight	~ 140 g

Note: Reverse polarity protection of the supply voltage, overvoltage, override and short circuit protection are provided.

[2] SMART sensors (Condition Monitoring Sensors) are a generation of sensors from HYDAC which can provide a variety of different measured variables.

Dimensions:

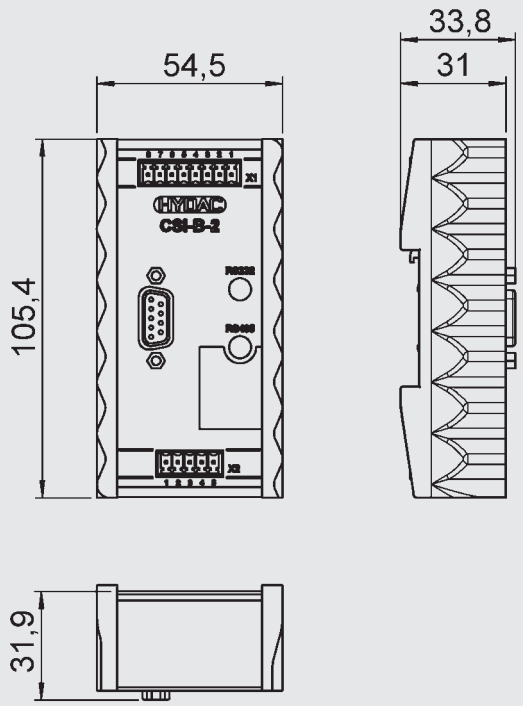

Terminal assignment:

Terminal strip –X1

Pin	Signal	
1	RS 485 (-)	
2	RS 485 (+)	
3 4	3 – 4 open: 3 – 4 closed:	HSI to RS 232 HSI to RS 485
5	RxD RS 232 (connected to Pin 3 SUB-D 9 pole)	
6	TxD RS 232 (connected to Pin 2 SUB-D 9 pole)	
7	0 V (connected to Pin 5 SUB-D 9 pole)	
8	$+U_B$ (18 .. 35 V DC) module supply	

Terminal block –X2

Pin	Signal
1	$+U_B$ (15 V DC) sensor supply
2	0 V
3	HSI signal
4	0 V
5	0 V

Model code:

CSI – B – 2 – 000

Modification number
000 = standard

Accessories:
Appropriate accessories, such as sensor lines for the electrical connection, can be found in the Accessories brochure.

Note:

The information in this brochure relates to the operating conditions and applications described.

For applications or operating conditions not described, please contact the relevant technical department.

Subject to technical modifications.

HYDAC ELECTRONIC GMBH
Hauptstr. 27, 66128 Saarbrücken
Germany
Telephone +49 (0)6897 509-01
Fax +49 (0)6897 509-1726
e-mail: electronic@hydac.com
Internet: www.hydac.com

AquaSensor AS 1000

Saturation level | **Temperature**

2 switching outputs or analogue output

Description:

The AquaSensor AS 1000 is the culmination of continued development of the successful AS 2000 series for online detection of water in oils, in particular as an OEM sensor for fluid conditioning monitoring. It measures the degree of saturation and the temperature of the fluid.

In the analogue output version, the AS 1000 transmits the values for the saturation level and the temperature as a 4 .. 20 mA signal.

In the version with two switching outputs, the AS 1000 can be configured by the user via the HYDAC service units HMG 3010 and HMG 4000, the Condition Monitoring Unit CMU 1000 and the interface module CSI-B-2. The following parameters can be adjusted:

- Saturation level / temperature
- Switch points
- Switching mode of switching outputs
- Switching direction
- Switching delay times

The AS 1000 therefore enables hydraulic and lubrication oils to be monitored accurately, continuously and online. As water problems are detected early on, malfunctions and unnecessary downtime can be reliably avoided.

Technical data:

Input data	
Saturation level	0 .. 100 %
Temperature	-25 .. 100 °C
Operating pressure	-0.5 .. 50 bar
Pressure resistance	≤ 630 bar
Mechanical connection	G3/8 A DIN 3852
Tightening torque, recommended	25 Nm
Parts in contact with fluid	Mechanical connection: stainless steel / vacuum-metallised ceramic Seal: FKM or EPDM
Output data	
Pin 2: Saturation level	
Output signal	4 .. 20 mA (corresponds to 0 .. 100 %) $R_{Lmax.} = (U_B - 10\ V) / 20\ mA$ [kW] or switching output (configurable)
Calibration accuracy	≤ ± 2 % FS max.
Accuracy in media measurements	≤ ± 3 % FS typ.
Pressure dependence	± 0.025 % FS / bar
Pin 4: Temperature	
Output signal	4 .. 20 mA (corresponds to -25 .. +100 °C) $R_{Lmax.} = (U_B - 10\ V) / 20\ mA$ [kW] or switching output (configurable)
Accuracy	≤ ± 2 % FS max.
Pin 5:	**HSI** (**H**YDAC **S**ensor **I**nterface) Automatic sensor recognition
Switching outputs	
Type	PNP transistor outputs (configurable as N/O or N/C)
Switching current	maximum 1 A per switching output
Environmental conditions	
Compensated temperature range	0 .. +90 °C
Operating temperature range [1]	-40 .. +100 °C / -25 .. +100 °C
Storage temperature range	-40 .. +100 °C
Fluid temperature range [1]	-40 .. +125 °C / -25 .. +125 °C
Viscosity range	1 .. 5000 cSt
Flow velocity	< 5 m/s
Fluid compatibility [2]	Mineral oil based fluids, synthetic and natural esters
CE mark	EN 61000-6-1 / 2 / 3 / 4
Protection class acc. to DIN EN 60529 [3]	IP 67
Other data	
Supply voltage	12 .. 32 V DC
Residual ripple of supply voltage	≤ 5 %
Current consumption	≤ 30 mA without outputs
Weight	~ 145 g

Note: reverse polarity protection, short circuit protection provided.
FS (**F**ull **S**cale) = relative to complete measuring range

[1] -25 °C with FKM seal, -40 °C on request
[2] Special fluids on request
[2] With mounted mating connector in corresponding protection class

Dimensions:

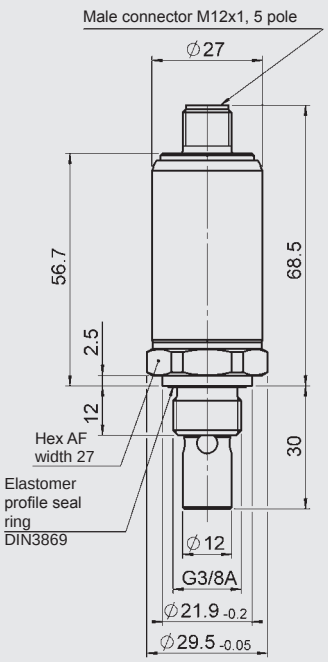

Model code:

AS 1 X 0 8 – X – 000

Fluid [1)]
0 = operating fluid mineral oil-based
1 = operating fluid phosphate ester-based

Mechanical connection
0 = G3/8 A DIN 3852

Electrical connection
8 = male M12x1, 5 pole
(mating connector not supplied)

Output signal
C = output 1 pin 2 saturation level (4 .. 20 mA)
output 2 pin 4 temperature (4 .. 20 mA)
2 = 2 switching outputs

Modification number
000 = standard

Note:
[1)] Special fluids on request

Accessories:
Appropriate accessories, such as mating connectors, can be found in the Accessories brochure.

Pin connections:

M12x1

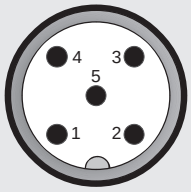

Pin	AS 1X08-C	AS 1X08-2
1	$+U_B$	$+U_B$
2	Saturation level 4 .. 20 mA	SP2
3	0 V	0 V
4	Temperature 4 .. 20 mA	SP1
5	HSI*	HSI*

* **HSI** = **H**YDAC **S**ensor **I**nterface (HYDAC's own communication interface)

Display, read-out and configuration options:

HDA 5500-1-1-xC-000
Digital Display Unit with 2 programmable switching outputs, specifically designed for use with the AS 1000

HDA 5500-1-1-AC-000
Order no.: 908869

HDA 5500-1-1-DC-000
Order no.: 908870

HMG 510
Portable 2-channel measuring instrument, specially designed for use with HSI and SMART sensors
Order no.: 909889

HMG 3010 and HMG 4000
Portable data recorders with fully graphics-capable colour display for displaying, recording and processing measured values as well as for configuring of HSI and SMART sensors

CMU 1000
Electronic evaluation unit for online monitoring of measured value as well as for the configuration of HSI and SMART sensors
Order no. 920718

CSI-B-2
Interface module, enables configuration of HSI and SMART sensors using HYDAC PC software CMWIN
Order no. 920134

Information on other read-out options can be found on our website at www.hydac.com or please contact your HYDAC representative.

Note:

The information in this brochure relates to the operating conditions and applications described.

For applications or operating conditions not described, please contact the relevant technical department.

Subject to technical modifications.

HYDAC ELECTRONIC GMBH
Hauptstr. 27, 66128 Saarbrücken
Germany
Telephone +49 (0)6897 509-01
Fax +49 (0)6897 509-1726
e-mail: electronic@hydac.com
Internet: www.hydac.com

AquaSensor AS 3000

Saturation level | Temperature | With display

2 switching outputs
Analogue output

Description:

The AquaSensor AS 3000 with an integrated digital display is based on the proven AS 1000 series for the online detection of water in oils, particularly as a sensor for Condition Monitoring.

The device has 2 switching outputs and one switchable analogue output signal (4 .. 20 mA or 0 .. 10 V).

The AS 3000 detects the water saturation level and temperature of the fluid and transmits the values in the form of an analogue or switching signal. The display shows the actual measured values. All settings available on the AS 3000 are combined in two easy-to-navigate menus. The following parameters can be adjusted:

- Saturation level / temperature
- Switch points
- Switching mode of switching outputs
- Switching direction
- Switching delay times

The AS 3000 therefore enables hydraulic and lubrication oils to be monitored accurately, continuously and online. As water problems are detected early on, malfunctions and unnecessary downtime can be reliably avoided.

Technical data:

Input data	
Saturation level	0 .. 100 %
Temperature	-25 .. 100 °C
Operating pressure	-0.5 .. 50 bar
Pressure resistance	≤ 630 bar
Mechanical connection	G3/8 A DIN 3852
Tightening torque, recommended	25 Nm
Parts in contact with fluid	Mechanical connection: stainless steel / vacuum-metallised ceramic Seal: FKM or EPDM
Output data	
Calibration accuracy	≤ ± 2 % FS max.
Accuracy in media measurements	≤ ± 3 % FS typ.
Pressure dependence	± 0.2 % FS / bar
Analogue output	
Signal	Selectable: 4 .. 20 mA load resist. max. 500 Ω 0 .. 10 V load resist. min. 1 kΩ corresponds to measuring range selected
Switching outputs	
Type	PNP transistor outputs (programmable as N/O or N/C)
Assignment	Selectable: Saturation level or temperature
Switching current	max. 1.2 A per switching output
Switching cycles	> 100 million
Environmental conditions	
Compensated temperature range	0 .. +80 °C
Operating temperature range	-25 .. +80 °C
Storage temperature range	-40 .. +80 °C
Fluid temperature range [1]	-40 .. +100 °C / -25 .. +100 °C
Viscosity range	1 .. 5000 cSt
Flow velocity	< 5 m/s
Fluid compatibility [2]	Mineral oil based fluids, synthetic and natural esters
CE mark	EN 61000-6-1 / 2 / 3 / 4
Protection class acc. to DIN EN 60529 [3]	IP 67
Other data	
Supply voltage	18 .. 35 V DC
Residual ripple of supply voltage	≤ 5 %
Current consumption	≤ 50 mA without outputs
Weight	~ 125 g

Note: reverse polarity protection, short circuit protection provided.
FS (**F**ull **S**cale) = relative to complete measuring range

[1] -25 °C with FKM seal, -40 °C on request
[2] Special fluids on request
[3] With mounted mating connector in corresponding protection class

Dimensions:

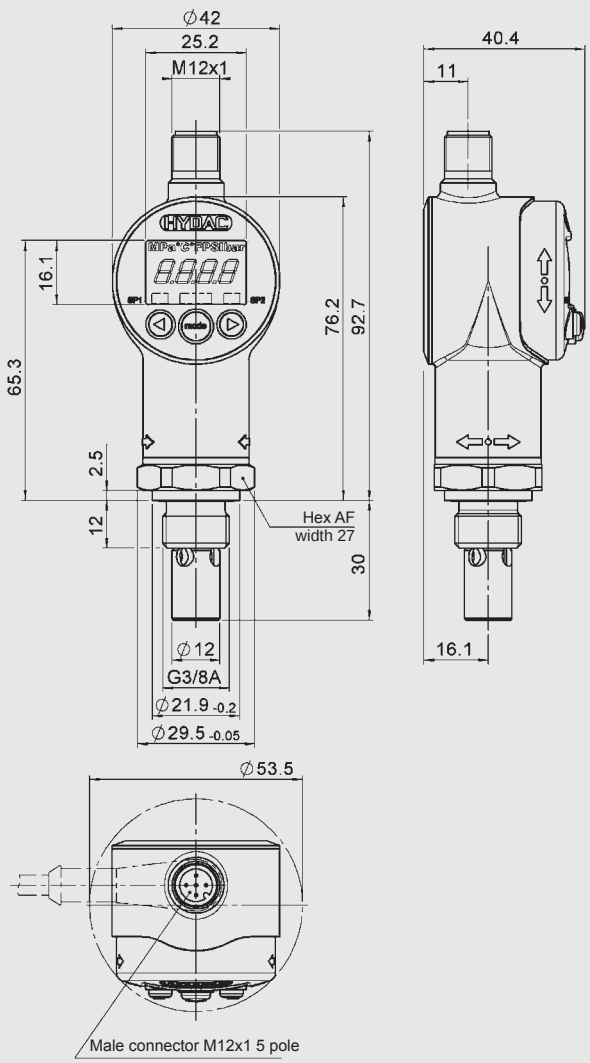

Pin connections:

M12x1

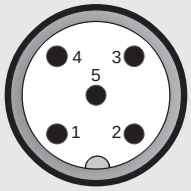

Pin	AS 3X08-5
1	$+U_B$
2	Analogue
3	0 V
4	SP1
5	SP2

Model code:

AS 3 X 0 8 – 5 – 000

Fluid [1)]
0 = operating fluid mineral oil-based
1 = operating fluid phosphate ester-based

Mechanical connection
0 = G3/8 A DIN 3852

Electrical connection
8 = male M12x1, 5 pole
(mating connector not supplied)

Output signal
5 = 2 switching outputs and 1 analogue output

Modification number
000 = standard

Note:
[1)] Special fluids on request

Accessories:
Appropriate accessories, such as mating connectors and mechanical adapters, can be found in the Accessories brochure.

Note:

The information in this brochure relates to the operating conditions and applications described.

For applications or operating conditions not described, please contact the relevant technical department.

Subject to technical modifications.

HYDAC ELECTRONIC GMBH
Hauptstr. 27, 66128 Saarbrücken
Germany
Telephone +49 (0)6897 509-01
Fax +49 (0)6897 509-1726
e-mail: electronic@hydac.com
Internet: www.hydac.com

Contamination Switch EY-1356

Description:

The contamination switch series EY-1356 works as a warning element in hydraulic systems and gearboxes and has been developed by HYDAC ELECTRONIC to meet the special requirements of our customers.

The sensor detects and attracts metallic ferromagnetic particles in oil or in other hydraulic fluids. The accumulation of particles leads to a change of the ohmic resistance which has an effect on the switching signal. The contamination sensor thus provides an early warning of possible wear. Substantial damage on bearings and gear wheels, for instance, can therefore be avoided.

The sensor is available with different mechanical and electrical connections and can be integrated into almost any application.

Special features:

- Simple structure
- Robust construction
- Standard connection types

Functional principle / diagram:

The permanent magnet solenoid at the measuring surface of the contamination switch attracts the ferromagnetic contaminant particles from the passing oil. The increased accumulation of particles forms an electrical bridge between the permanent solenoid and the adjacent metal contact. The resulting switching signal can, for instance, activate a warning function or switch off the system.

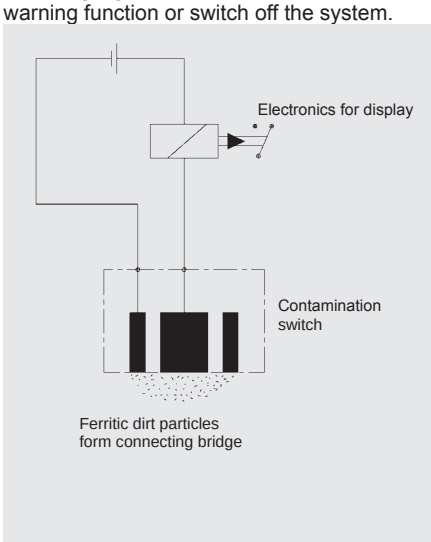

Technical data:

Maximum switching voltage	30 V DC
Maximum switching current	200 mA
Maximum oil pressure abs.	6 bar (16 bar)
Retention force of the permanent solenoid	~ 1.5 N
Ambient temperature	-25 °C to +90 °C
Protection class acc. to DIN 40050	DEUTSCH male connector DT04 2 pole IP67 Integrated connector acc. to EN175301-803/ ISO4400 IP65
Mating connector supplied	DEUTSCH male connector DT04 2 pole no Integrated connector acc. to EN175301-803/ ISO4400 yes
Max. tightening torque	M14x1.5 15 Nm M18x1.5 25 Nm M22x1.5 60 Nm M26x1.5 70 Nm M33x2 140 Nm
Installation position	We recommend an “upside-down” mounting position, i.e. connector or cable outlet pointing downwards.

The contamination switch is supplied with seal ring DIN 3896 NBR.

Order details:

Electrical connection	Mechanical connection	Part number
Integrated connection plug acc. to EN175301-803/ ISO4400	M14x1.5	3252533
	M18x1.5	3305023
	M22x1.5	3731848
	M26x1.5	3731849
	M33x2	3252555
Strand DEUTSCH male connector DT04 2 pole	M14x1.5	3731852
	M18x1.5	3731853
	M22x1.5	3731854
	M26x1.5	3731855
	M33x2	3731856

Dimensions:

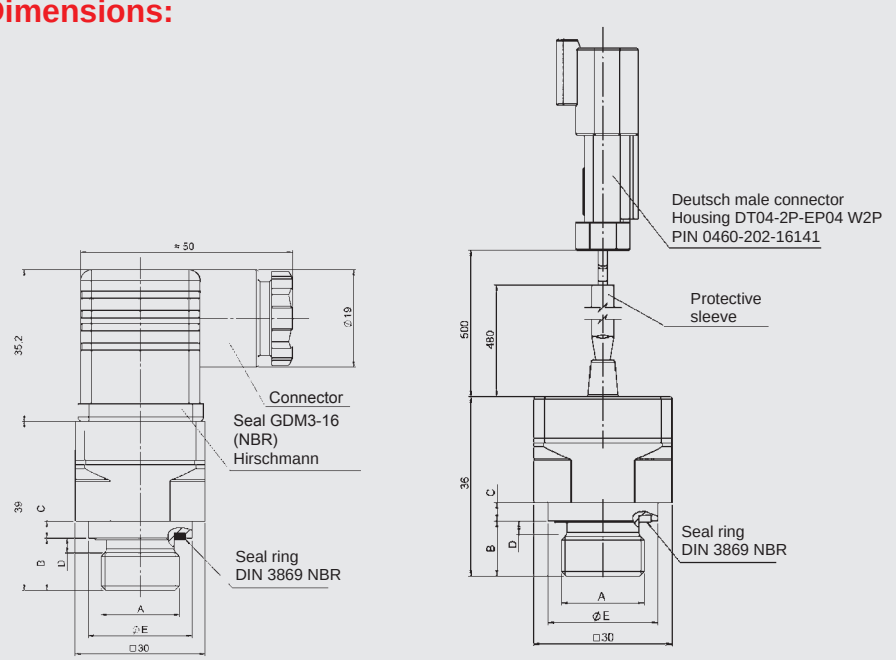

Dim.	14	18	22	26	33	Other types of connection are available on request
A	M14x1.5	M18x1.5	M22x1.5	M26x1.5	M33x2	
B	12	12	12	12	12	
C	4	4	4	4	4.5	
D	3	3	3	3	4	
ØE	19	23.9	27	31.4	39.2	

Pin connections:

acc. to EN 175301-803

Without connector

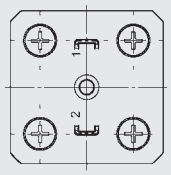

Pin	
1	$+U_B$
2	$-U_B$

Reverse polarity permitted

Cable assignment for Deutsch DT04

Pin	
1	$+U_B$
2	$-U_B$

Reverse polarity permitted

Switching example:

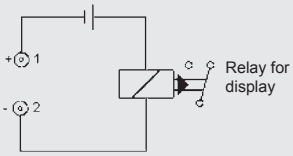

Note:

The information in this brochure relates to the operating conditions and applications described.

For applications or operating conditions not described, please contact the relevant technical department.

Subject to technical modifications.

HYDAC ELECTRONIC GMBH
Hauptstr. 27, 66128 Saarbrücken
Germany
Telephone +49 (0)6897 509-01
Fax +49 (0)6897 509-1726
e-mail: electronic@hydac.com
Internet: www.hydac.com

HYDAC INTERNATIONAL

Oil Condition Sensor HYDACLAB® HLB 1400

Oil condition monitoring | **4 measured variables**

Sequential analogue and switching output

Description:

The HYDACLAB® HLB 1400 is a multifunctional sensor for online condition monitoring of standard and biodecradable oils in stationary and mobile applications.

The user is kept informed of changes in fluid condition as they occur and can take immediate action in the case of deteriorating operating conditions.

Assertions can be made about the condition of an oil, e.g. ageing or mixing with other fluids, based upon the measured values of dielectric constant and its change, electric conductivity and its change, saturation level, and temperatur.

These measurements are available as sequential analogue signals and/or switching signals at the electrical output of the HYDACLAB® (e.g. for activating warning devices or alarms).

The measurement values can be displayed and configured on various HYDAC display and measurement devices.

Technical data:

Input data		
Saturation level	0 .. 100 % saturation	
Temperature	-25 .. +100 °C	
Dielectric constant	1 .. 10	
Change in the dielectric constant	-30 .. +30 %	
electrical conductivity	0 .. 100 nS/m	
Change of electric conductivity	-100 .. 200 %	
Operating pressure	< 50 bar	
Pressure resistance	< 600 bar	
Flow velocity	< 5 m/s	
Parts in contact with fluid	Stainless steel / ceramic with vacuum-metallised seal Glass with thin-film metallic coating / FKM	
Output variable saturation level		
Output signal (0 .. 100 %)	4 .. 20 mA / 0 .. 10 V	
Calibration accuracy	≤ ± 2 % FS max.	
Accuracy[1)]	≤ ± 3 % FS typ. [1)]	
Output variable temperature		
Output signal (-25 .. +100 °C)	4 .. 20 mA / 0 .. 10 V	
Accuracy	≤ ± 3 % FS max.	
Output variable dielectric constant		
Output signal (1 .. 10)	4 .. 20 mA / 0 .. 10 V	
Accuracy	≤ ± 5 % FS max.	
Output variable change of dielectric constant		
Output signal (± 30 % of IV)	12 mA ± 8 mA / 5 ± 5 V	
Accuracy	See below [2)]	
Output variable electric conductivity		(not for Mod 001)
Output signal (0 .. 100 nS/m)	4 .. 20 mA / 0 .. 10 V	
Accuracy	≤ ± 5 % FS max.	
Output variable change of electric conductivity		(not for Mod 001)
Output signal (-100 .. 200 %)	12 mA ± 8 mA / 5 ± 5 V	
Accuracy	See below [2)]	
Switching output (default settings)		
Signal 1 (N/C)	PNP switching output 0.5 A max., switching level ≥ U_B - 4 V	
Default alert SP1 relative humidity	≥ 85 %	
Default alert level SP1 temperature	≥ 80 °C	
Default alert level SP1 rel. change in dielectric constant	± 15 %	
Default alert SP1 rel. change in conductivity	± 15 %	(not for Mod 001)
Environmental conditions		
Nominal temperature range	+20 .. +80 °C	
Storage temperature	-30 .. +90 °C	
Fluid compatibility	Suited for hydraulic and lubrication oils	
CE mark	EN 61000-6-1 / 2 / 3 / 4	
Viscosity range	1 .. 5000 cSt	
Shock resistance acc. to DIN EN 60068-2-27	50 g / 11 ms / half sine	
Vibration resistance acc. to DIN EN 60068-2-6 at 5 .. 2000 Hz	10 g / sine	
Protection class acc. to DIN EN 60529 [3)]	IP 67	
Other data		
Supply voltage U_B	10 .. 36 V DC	
Residual ripple of supply voltage	≤ 5 %	
Current consumption without outputs	max. 100 mA	
Mechanical connection	G ¾ A ISO 1179-2	
Tightening torque, recommended	30 Nm	
Electrical connection	M12x1, 5 pole / 8 pole	
Housing	Stainless steel	
Weight	~ 215 g	

Note: reverse polarity protection, short circuit protection provided.
FS (**F**ull **S**cale) = relative to complete measuring range, **IV** (**I**nitial **V**alue)

[1)] The max. accuracy achievable when measuring relative humidity is heavily dependent on the type of fluid or fluid additive. More precise information on this is available on request.
[2)] The accuracies when measuring the change of dielectric constant and the electric conductivity depend on the application, the oil type and the auto-calibration of the sensor. Detailed information available on request.
[3)] With mounted mating connector in corresponding protection class

Dimensions:

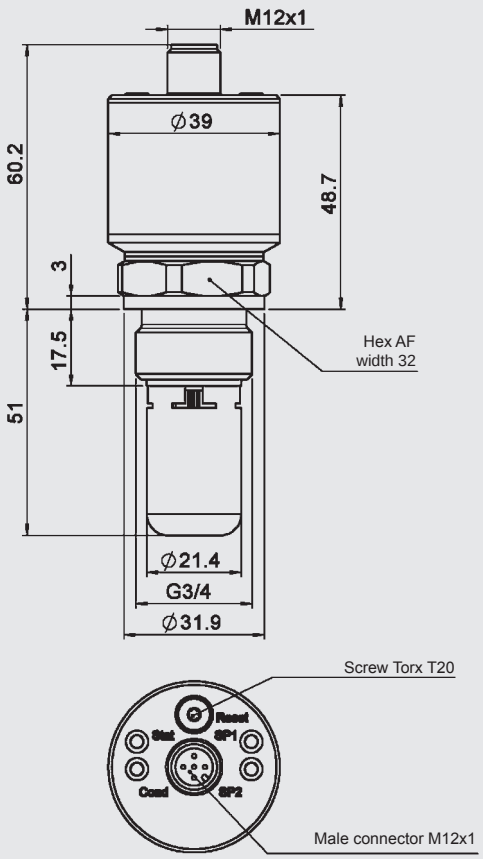

Model code:

HLB 1 4 J X – XXXXX – 000

Measured variables
4 = 4 measured variables:
- saturation (rel. humidity)
- temperature
- electric conductivity (not for Mod 001)
- dielectric constant (DC)

Mechanical connection
J = G 3/4 A ISO 1179-2

Electrical connection
8 = male M12x1, 5 pole (mating connector not supplied)
P = male M12x1, 8 pole (mating connector not supplied)

Signal technology
5 pole:
1C000 = 1 switching output / analogue output
00S12 = RS 485
CANopen (only available on request)
IO-Link (only available on request)
8 pole:
1CS12 = switching output / analogue output / RS 485

Modification number
000 = standard
001 = modification; replaces HLB 1308

Accessories:
Appropriate accessories, such as mating connectors, can be found in the Accessories brochure.

Pin connections:

M12x1, 5 pole

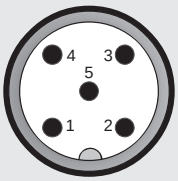

Pin	1C000	00S12
1	$+U_B$	$+U_B$
2	SP1/AA1	RS485B
3	GND	GND
4	SP2/AA2	RS485A
5	HSI	HSI

M12x1, 8 pole

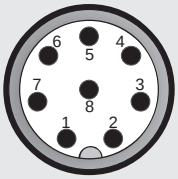

Pin	1CS12
1	$+U_B$
2	SP1/AA1
3	GND
4	PE
5	HSI
6	RS 485A
7	RS 485B
8	SP2/AA2

HSI = **H**YDAC **S**ensor **I**nterface (HYDAC's own communication interface)

SP = Switch point

AA = Analogue output (sequence)

Display and read-out options:

HMG 510
Portable 2-channel measuring instrument, specially designed for use with HSI and SMART sensors.
Order no.: 909889

HMG 2500 / HMG 3010 / HMG 4000
Portable data recorders with fully graphics-capable colour display for displaying, recording and processing measured values as well as for configuring of HSI and SMART sensors.

CMU 1000
Electronic evaluation unit for online monitoring of measured values as well as for configuration of HSI and SMART sensors.
Order no.: 920718

CSI-B-2
Interface module, enables configuration of HSI and SMART sensors using HYDAC PC software CMWIN.
Order no.: 920134

Note:

The information in this brochure relates to the operating conditions and applications described.

For applications or operating conditions not described, please contact the relevant technical department.

Subject to technical modifications.

HYDAC ELECTRONIC GMBH
Hauptstraße 27, 66128 Saarbrücken
Germany
Telephone +49 (0)6897 509-01
Fax +49 (0)6897 509-1726
E-mail: electronic@hydac.com
Internet: www.hydac.com

MEASURING INSTRUMENTS AND DISPLAY UNITS [12]

DISPLAY UNITS

	Page
HDA 5500	451

MEASURING INSTRUMENTS (PORTABLE DATA RECORDERS)

HMG 500	453
HMG 510	455
HMG 2500	457
HMG 4000	461

Digital Display Unit HDA 5500

Description:

The digital display units in the HDA 5500 series are microprocessor-controlled display and monitoring units designed for control panel installation. Different versions are available with a maximum of three analogue inputs, an analogue output (adjustable 4 .. 20 mA or 0 .. 10 V) and up to four relay outputs.

The analogue input signals are displayed according to the settings selected by the user. Each of the relay output can be assigned to one of the inputs or to the difference between input 1 and 2. A Pt100 temperature probe can be connected directly. In addition, an optional frequency measurement is possible, e.g. by using the HDS 1000 (HYDAC rpm probe) for the measurement of the rpm speed of rotary components.

Depending on the model, it is also possible to connect SMART sensors (Condition Monitoring sensors). SMART sensors are a generation of sensors from HYDAC which can provide a variety of different measured variables.

Special features:

- Digital display of analogue signals
- Clear 4-digit, 7-segment LED display
- Up to 3 analogue inputs (4 .. 20 mA, 0 .. 10 V or 0 .. 5 V)
- Accuracy ≤ ± 0.5 %
- Differential measurement possible
- Analogue output (4 .. 20 mA or 0 .. 10 V)
- Up to 4 relay switching outputs
- Supply voltage 12 .. 32 V DC or 85 .. 265 V AC 50 / 60 Hz
- Optionally with Pt100 sensor input or frequency input

Technical data:

Display range	
Display	4-digit 7-segment LED display field, red, height of digits 14.2 mm 3 LEDs for active sensor, 4 LEDs for active switching output
Display range	-999 .. 9999 (user-adjustable)
Display units with backlight	bar, kg/cm², MPa, psi, °C, °F, mA, V, Hz, kN, m, mm, inch, l, l/min, gal, gal/min, rpm, %, t
Input data	
Analogue signal input(s)	
Measuring range(s) (up to 3 analogue inputs)	Selectable: 4 .. 20 mA, 0 .. 10 V, 0 .. 5 V or 4 .. 20 mA sequential (Modification 006)
Accuracy	≤ ± 0.5 % at 25 °C
Pt100 input	
Measuring range	-25 .. +100 °C
Accuracy	≤ ± 0.5 % at 25 °C
Frequency/counter input	
Signal threshold	0 .. 0.6 V = LOW, 3 .. 24 V = HIGH
Frequency range	15 Hz to 4 kHz
Output data	
Analogue output, permitted load resistance	4 .. 20 mA load resist. ≤ 400 Ω or 0 .. 10 V load resist. ≥ 2 kΩ
Accuracy	≤ ± 0.5 % at 25 °C
Rise time	70 ms
Switching outputs	
Type	2 or 4 relays each with separate common supply
Switching voltage	0.1 .. 250 V AC, 12 .. 32 V DC
Switching current	10 mA .. 2 A
Switching capacity	500 VA, 64 W
Life expectancy of switch contacts	≥ 20 million at minimum load ≥ 400,000 at maximum load (typical)
Reaction time	Approx. 20 ms (with switching delay = 0 ms)
Setting range of switch points	1.5 .. 100 % of the pre-set display range
Setting range of the switching hystereses (switch-back points)	0.5 .. 99 % of the pre-set display range
Environmental conditions	
Nominal temperature range	0 .. +50 °C
Operating temperature range	0 .. +50 °C
Storage temperature range	-40 .. +80 °C
CE mark	EN 61000-6-1 / 2 / 3 / 4
Other data	
Housing	Control panel housing 96 x 48 x 109 mm; control panel cut-out 92 (+0.8) x 45 (+0.6) mm; front panel thickness 1.25 .. 15 mm; maximum installation depth 121 mm
Supply voltage	12 .. 32 V DC or 85 .. 265 V AC 50 / 60 Hz
Power consumption	15 VA at 85 .. 230 V AC – fuse protection 1 AT
Supply for measurement transmitters	12 V DC ± 1 %; max. 20 mA / analogue input
Residual ripple of supply voltage	≤ 5 %
Weight	approx. 320 g

Note: Reverse polarity protection of the supply voltage, overvoltage, override and short circuit protection are provided.

Input models:

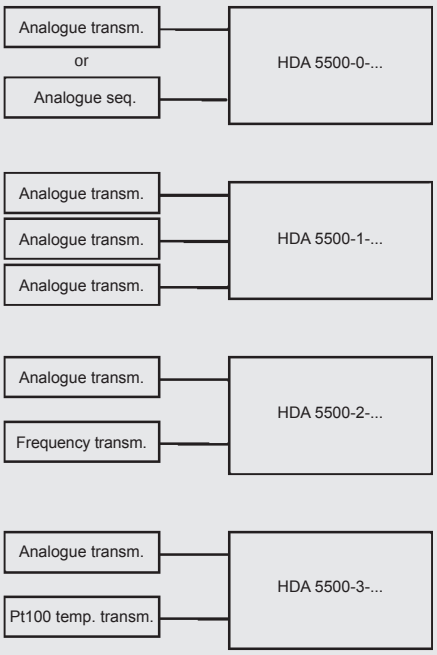

Output models:

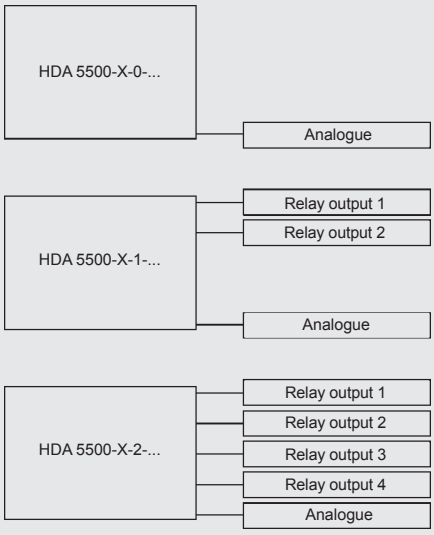

Connection terminals:
Supply voltage: Plug-in terminal block 2 pole, RM 5.08 (cross section max. 2.5 mm²)
Inputs/outputs: Plug-in terminal block 11 pole, RM 3.5 (cross section max. 1.5 mm²)
Relay switching outputs: Plug-in terminal block 5 pole, RM 5.08 (cross section max. 2.5 mm²)

Dimensions:

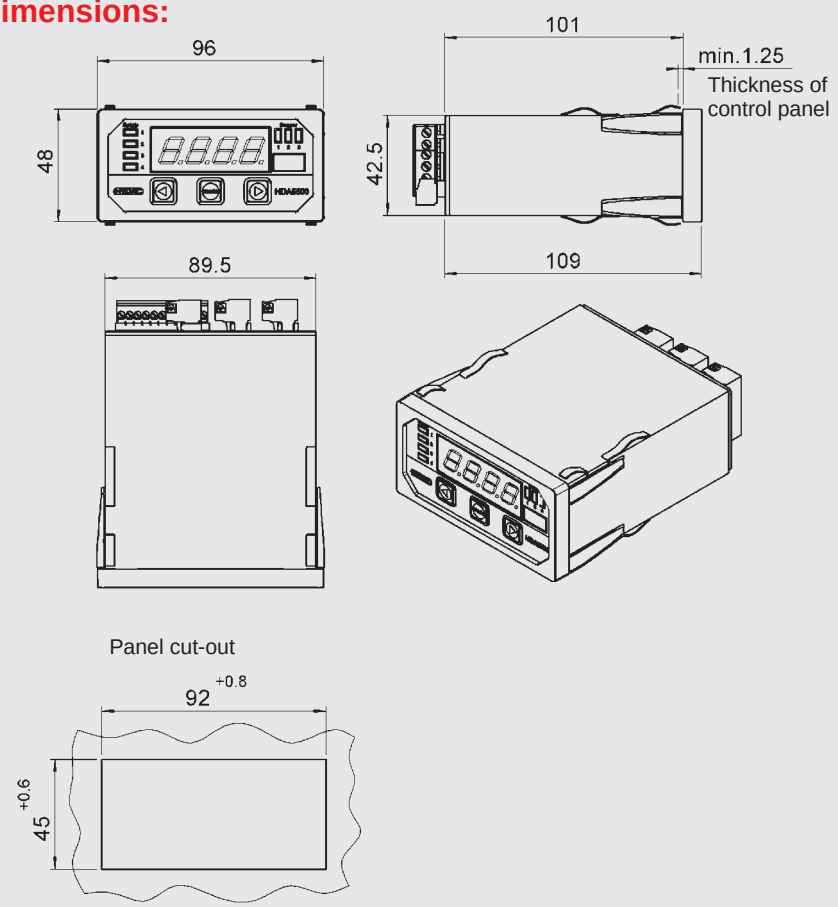

Model code:

HDA 5 5 0 0 – X – X – XX – 00X

Inputs
0 = one analogue input
1 = three analogue inputs
2 = one analogue input + frequency input/counter function
3 = one analogue + Pt100 input

Outputs
0 = 1 analogue output
1 = 1 analogue output + 2 relay switching outputs
2 = 1 analogue output + 4 relay switching outputs

Supply voltage
AC = 85 .. 265 V AC
DC = 12 .. 32 V DC

Modification
000 = standard
006 = version with sequential analogue output for HLB 1400 and CS 1000 (only with input model “0” and output model “2”)

Note:

The information in this brochure relates to the operating conditions and applications described.

For applications or operating conditions not described, please contact the relevant technical department.

Subject to technical modifications.

HYDAC ELECTRONIC GMBH
Hauptstr. 27, 66128 Saarbrücken
Germany
Telephone +49 (0)6897 509-01
Fax +49 (0)6897 509-1726
e-mail: electronic@hydac.com
Internet: www.hydac.com

HYDAC INTERNATIONAL

Portable Measuring Instrument HMG 500

Two-line LCD display
Two sensors can be connected
Automatic sensor recognition

Description:

The HMG 500 is a portable measuring instrument for simple measurement tasks in fluid technology such as hydraulics, pneumatics, lubrication, process, refrigeration and air conditioning.

Up to two sensors with **H**YDAC **S**ensor **I**nterface (**HSI**), for example for measuring pressure, temperature or flow rate, can be connected (exception: SMART sensors). The HMG 500 automatically recognises these sensors and takes all of the necessary basic settings from each sensor. The measurement values and the corresponding physical unit are displayed on an easy-to-read LCD display.

In addition, the HMG 500 offers a multitude of additional advantages, e.g. in comparison with pressure measurements on machines and plants using mechanical pressure gauges. The user profits from a technology-related high level of measuring accuracy and dynamics. The HMG 500 determines the measured values with a very high sampling rate and can therefore, for example, monitor and display pressure peaks in the maximum value memory or rapid pressure discharge in the minimum value memory. Furthermore, differential measurements can be carried out with using two sensors of a similar type, for example, to evaluate pressure drops or temperature differentials.

To further extend the application range, the HMG 500 has a function for setting mechanical pressure and temperature switches precisely and reliably.

Compact, simple and versatile – the HMG 500 is an invaluable tool for all those involved in maintenance, commissioning and service.

Special features:

- Hand-held 2-channel portable measuring instrument
- Simple and user-friendly key operation
- Large LCD display including battery status indication
- 2 sensor inputs, automatic sensor recognition

Technical data:

Measurement inputs	2 analogue inputs for HYDAC measurement transmitters with HSI interface – except for SMART sensors[2)]
Accuracy[1)]	≤ ± 0.1 % FS max.
Functions	● Automatic recognition of measuring range and unit of measurement ● Taring of the measuring channels ● Display of the current measured value ● Min/max value display ● Reset of min/max values ● Measured values differentiel channel A-B ● Unit display, selectable ● Setting device for mechanical pressure and temperature switches
Display	4-digit 7-segment LCD display with battery status indication; 2 measured values incl. unit displayed simultaneously
Measurement unit (dependent on connected sensors)	Selectable: Pressure: bar, psi, MPa Temperature: °C, K, °F Flow rate: l/min, gallon/min (1 US gallon = 3.7853 l)
Sampling rate	0.1 ms
Resolution	12 bit
CE mark	EN 61000-6-1 / 2 / 3 / 4
Safety	EN 61010
Protection class	IP 54
Supply voltage	9 V battery, operating life: approx. 10 h (with 2 sensors) Power supply unit 230 V AC (available as accessory)
Environmental conditions	Operating temperature: +5 .. +60 °C Storage temperature: -40 .. +70 °C Rel. humidity: 0 .. 70 %
Weight	410 g

Note: [1)] **FS** (**F**ull **S**cale) = relative to complete measuring range
[2)] SMART sensors (Condition Monitoring Sensors) are a generation of sensors from HYDAC which can provide a variety of different measured variables.

Dimensions:

Ordering Details:

HMG 500 - 000
Scope of delivery

- HMG 500
- Operating manual D/E/F
- 9 V battery

HMG 500-Set 01
Scope of delivery

- HMG 500
- Operating manual D/E/F
- 9 V battery
- HDA 4748-H-0600-000
- ZBE 30-02, sensor cable M12x1, 2 m
- Connection adapter G1/4 female to Minimess 16X2
- Case for HMG 500 / 510

HMG 500-Set 02
Scope of delivery

- HMG 500
- Operating manual D/E/F
- 9 V battery
- 2 pcs. HDA 4748-H-0600-000
- 2 pcs. ZBE 30-02, sensor cable M12x1, 2 m
- 2 pcs. connection adapter G1/4 female to Minimess 16X2
- Case for HMG 500 / 510

Accessories:
Appropriate accessories, such as electrical and mechanical connection adapters and power supply units, can be found in the Accessories brochure.

Examples of main accessories:

- **Pressure transmitter**
  HDA 4000 with HSI interface
  Pressure ranges: -1 .. 9 bar, 0 .. 16 bar, 0 .. 60 bar, 0 .. 100 bar, 0 .. 250 bar, 0 .. 400 bar, 0 .. 600 bar, 0 .. 1000 bar
- **Temperature transmitter**
  ETS 4000 with HSI interface
  Measuring range: -25 .. 100 °C
- **Flow rate transmitter**
  EVS 3000 with HSI interface
  Measuring ranges: 1.2 .. 20 l/min, 6 .. 60 l/min, 15 .. 300 l/min, 40 .. 600 l/min
- **Sensor simulator**
  SSH 1000, ideal for training purposes
- **Electrical connection adapter**
  UVM 3000, for mechanical pressure and temperature switches
- **Hydraulic adapters**

Note:

The information in this brochure relates to the operating conditions and applications described.

For applications or operating conditions not described, please contact the relevant technical department.

Subject to technical modifications.

HYDAC ELECTRONIC GMBH
Hauptstraße 27, 66128 Saarbrücken
Germany
Telephone +49 (0)6897 509-01
Fax +49 (0)6897 509-1726
E-mail: electronic@hydac.com
Internet: www.hydac.com

HYDAC INTERNATIONAL

Portable Measuring Instrument HMG 510

Two-line LCD display
Two sensors can be connected
(incl. HYDAC SMART sensors)
Automatic sensor recognition

Description:

The HMG 510 is a portable instrument for simple measurement tasks on hydraulic and pneumatic systems in mobile and industrial applications.

Thanks to its compactness and ease of handling, the HMG 510 is an ideal companion for employees in maintenance, commissioning and service.

Up to two sensors with HYDAC **S**ensor **I**nterface (**HSI**) can be connected. Sensors are available to measure pressure, temperature and flow rate as well as sensors for condition monitoring (also known as SMART sensors).

Some examples of SMART sensors are the HYDACLAB® Oil Condition Sensor, the AS 1000 AquaSensor and the CS 1000 Contamination Sensor.

The HMG 510 automatically recognises these sensors and takes all of the necessary basic settings from each sensor. The measurement values and the corresponding physical unit are displayed on an easy-to-read LCD display.

In addition to this, the HMG 510 enables measured values which have been saved in the SMART sensors to be uploaded to a PC. With the aid of the HYDAC PC software "**CMWIN**", the measured data stored in the SMART sensors can be displayed on a PC screen in the form of a graph, then analysed, edited, processed and saved. The HMG has a standard integrated USB port to enable this data transfer.

To further extend the application range, the HMG 510 has a function for setting mechanical pressure and temperature switches precisely and reliably.

Special features:

- Hand-held 2-channel portable measuring instrument
- Simple and user-friendly key operation
- Large LCD display including battery status indication
- 2 sensor inputs, automatic sensor recognition
- Specially designed to display measured values from Condition Monitoring sensors (SMART sensors).
- USB port

Technical data:

Measurement inputs	2 analogue inputs for HYDAC measurement transmitters with HSI interface and SMART sensors
Accuracy[1]	≤ ± 0.1 % FS max.
Functions	● Automatic recognition of measuring range and unit of measurement ● Taring of the measuring channels ● Display of the current measured value ● Min/max value display ● Reset of min/max values ● Measured values differentiel channel A-B ● Unit display, selectable ● Setting device for mechanical pressure and temperature switches ● Communication bridge to a connected PC
Display	4-digit 7-segment LCD display with battery status indication; 2 measured values incl. unit displayed simultaneously
Measurement unit (dependent on connected sensors)	Selectable for: Pressure: bar, psi, MPa Temperature: °C, K, °F Flow rate: l/min, gallon/min (1 US gallon = 3.7853 l) Fixed for SMART sensors
Sampling rate	0.1 ms
Resolution	12 bit
CE mark	EN 61000-6-1 / 2 / 3 / 4
Safety	EN 61010
Protection class	IP 54
Supply voltage	9 V battery, operating life: approx. 10 h (with 2 sensors)[2] Power supply unit 230 V AC (available as accessory)
Environmental conditions	Operating temperature: +5 .. +60 °C Storage temperature: -40 .. +70 °C Rel. humidity: 0 .. 70 %
Weight	410 g

Note: [1] **FS** (**F**ull **S**cale) = relative to complete measuring range
[2] Not applicable to SMART sensors, as they require an power supply.

Dimensions:

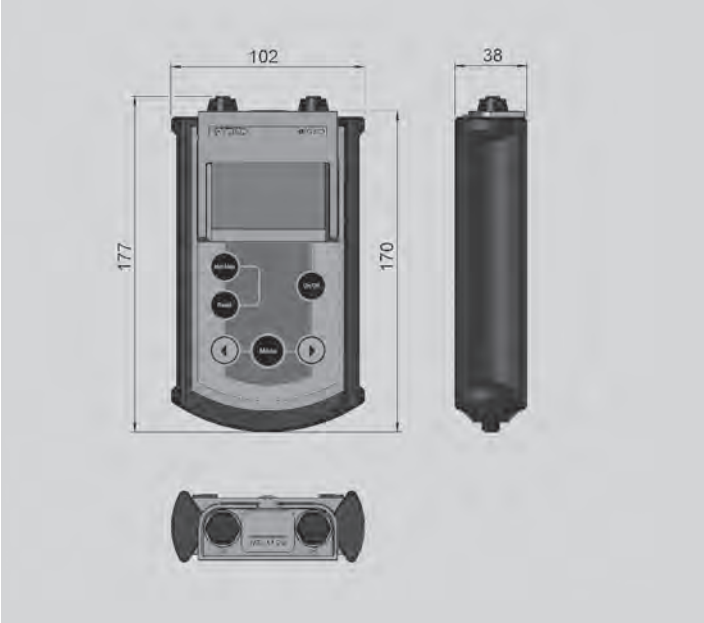

Ordering Details:

HMG 510 - 000
Scope of delivery

- Case for HMG 500/510
- HMG 510
- Operating manual D/E/F
- 9 V battery
- USB cable
- Y-adapter blue (for HLB 1400)
- Y-adapter yellow (for CS 1000)
- ZBE 30-02, sensor cable M12x1, 2 m
- Software CD with "CMWIN"

Accessories:
Appropriate accessories, such as electrical and mechanical connection adapters and power supply units, can be found in the Accessories brochure.

Examples of main accessories:

- **Pressure transmitter**
  HDA 4000 with HSI interface
  Pressure ranges: -1 .. 9 bar, 0 .. 16 bar, 0 .. 60 bar, 0 .. 100 bar, 0 .. 250 bar, 0 .. 400 bar, 0 .. 600 bar, 0 .. 1000 bar
- **Temperature transmitter**
  ETS 4000 with HSI interface
  Measuring range: -25 .. 100 °C
- **Flow rate transmitter**
  EVS 3000 with HSI interface
  Measuring ranges: 1.2 .. 20 l/min, 6 .. 60 l/min, 15 .. 300 l/min, 40 .. 600 l/min
- **Sensor simulator**
  SSH 1000, ideal for training purposes
- **Electrical connection adapter**
  UVM 3000, for mechanical pressure or temperature switches
- **Hydraulic adapters**

Note:

The information in this brochure relates to the operating conditions and applications described.

For applications or operating conditions not described, please contact the relevant technical department.

Subject to technical modifications.

HYDAC ELECTRONIC GMBH
Hauptstraße 27, 66128 Saarbrücken
Germany
Telephone +49 (0)6897 509-01
Fax +49 (0)6897 509-1726
E-mail: electronic@hydac.com
Internet: www.hydac.com

HYDAC INTERNATIONAL

Portable Data Recorder HMG 2500

3.5" colour display
Up to 4 sensors can be connected
Automatic sensor recognition

Description:

The HMG 2500 is an impressive, top performance portable measurement and data acquisition equipement.

Automated setting procedures, a simple, self-explanatory operator guide and many comprehensive functions ensure the operator is able to carry out a wide range of measurement tasks within a very short time.

This makes the HMG 2500 an ideal companion for employees in maintenance, commissioning and service.

The device is designed primarily to record pressure, temperature and flow rate values which are the standard variables in hydraulics and pneumatics.

For this purpose, special sensors are available. The HMG 2500 recognises the measured value, measuring range and the unit of these sensors and automatically carries out the basic device settings accordingly.

In addition to this, the HMG 2500 has a digital input, e.g. for frequency or speed measurement, as well as a virtual measurement channel for the measurement of difference or performance.

Due to the wide range of functions and its simple handling, the HMG 2500 is just as appropriate for users who take measurements only occasionally as it is for professionals for whom measuring and documentation are routine.

The update capability of the HMG 2500 ensures that the user can benefit from future upgrades of the device software.

Special features:

- Simple and user-friendly operation
- Practical, robust design
- Large, full graphics colour display
- Quick and independent basic setting by use of automatic sensor recognition
- Up to 4 sensors can be connected simultaneously
- Up to 32 measurement channels can be depicted simultaneously
- Sampling rates up to 0.1 ms
- Very large data memory for archiving measurement curves
- Various measurement modes:
  - Normal measuring
  - Fast curve recording
  - Long-term measurements
- 2 independent triggers, can be linked logically
- Simple sensor connection by means of M12x1 push-pull connector
- PC connection
  - USB
  - RS 232
- Convenient visualisation, archiving and data processing using the HMGWIN software supplied.

Function:

- Clear and graphical selection menus guide the operator intuitively to all the device functions available.
  A navigation pad on the keypad ensures rapid operation.
- The HMG 2500 can record signals from up to **four sensors simultaneously**. For this there are 4 robust standard input sockets.
- The following sensors can be connected to 3 of these input sockets:
  - 3 analogue sensors (e.g. for pressure, temperature and flow rate) with the special digital HSI interface (HYDAC Sensor Interface); this means the basic device settings (measured variable, measuring range and unit of measurement) are undertaken automatically
  - 3 Condition Monitoring sensors [1] (SMART sensors); again, the basic device settings are carried out automatically
- Frequency measurements, counter functions or triggers for data logging can be implemented via the fourth input socket with one digital input.
- Additionally, the HMG 2500 has a virtual measuring channel. The virtual measuring channel enables a differential measurement or a performance measurement by means of the sensors connected to the measuring channels "A" and "B".
- All input channels can operate simultaneously at a **sampling rate** of 0.5 ms (1.0 ms for SMART sensors). For the recording of highly dynamic processes, a sampling rate of 0.1 ms can be achieved.
- The most attractive function of the HMG 2500 surely is the capability of "online" recording and graphic illustration of dynamic processes, which means as a **measuring curve in** real time.

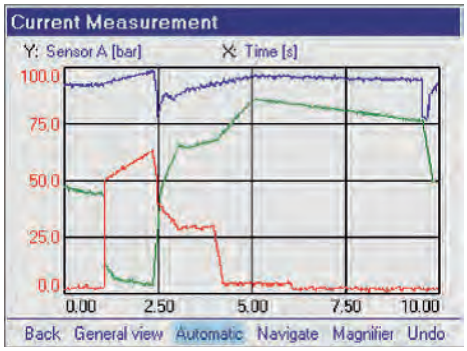

- The **data memory** for recording curves or logs can hold up to 500,000 measured values per recording. Over 100 of such data recordings in full length can be stored in an additional archiving memory.
- For targeted, **event-driven curves or logs**, the HMG 2500 has two independent triggers, which can be linked together logically.
- User-specific device settings can be stored and re-loaded at any time as required. This means that repeat measurements can be carried out on a machine again and again using the same device settings.

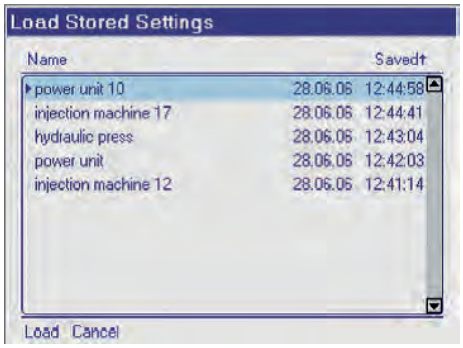

- Measured values, curves or texts are visualised on a **full graphics colour display** in different selectable formats and display forms.

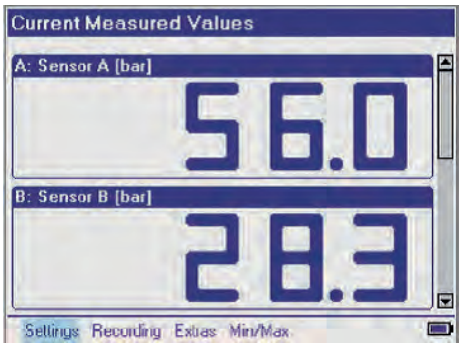

- Numerous useful and easy-to-use **auxiliary functions** are available, e.g. zoom, ruler tool, differential value graph creation and individual scaling, which are particularly for use when analysing the recorded measurement curves.

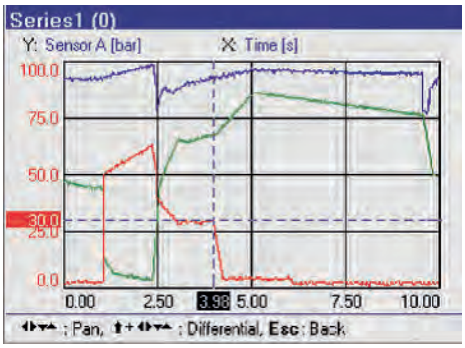

- The HMG 2500 communicates with a PC via the built-in USB interface or RS 232 interface.

[1] SMART sensors
(Condition Monitoring sensors) are a generation of sensors from HYDAC which can provide a variety of different measured variables.

HMGWIN:

The PC software HMGWIN is also supplied with the device. This software is a convenient and simple package for analysing and archiving curves and logs which have been recorded using the HMG 2500, or for exporting the data for integration into other PC programs if required.

In addition it is possible to operate the HMG 2500 directly from the computer. Basic settings can be made, and measurements can be started online and displayed directly on the PC screen in real-time as measurement curves progress.

HMGWIN can be run on PCs with Windows Vista / XP / 2000 and Windows 7, 8.1 and 10 operating systems.

Some examples of the numerous useful additional functions:

- **Transfer and archiving** of measurements recorded using the HMG 2500
- Display of the measurements in graph form or as a table

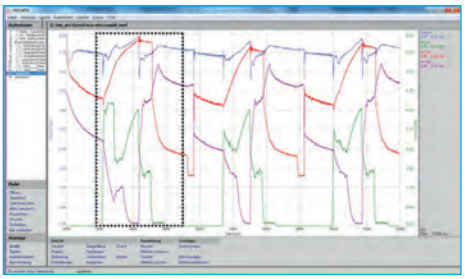

- **Zoom function:**
  Using the mouse, a frame is drawn around an interesting section of a measurement curve, which is then enlarged and displayed.

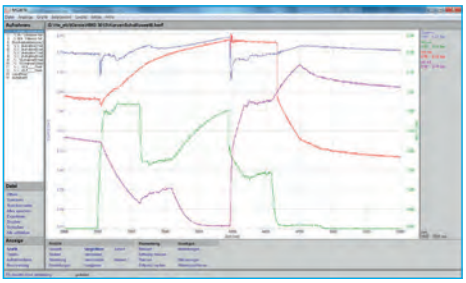

Fig.: Zoomed section of measurement curve

- **Accurate measurement** of the curves using the ruler tool (time values, amplitude values and differentials)

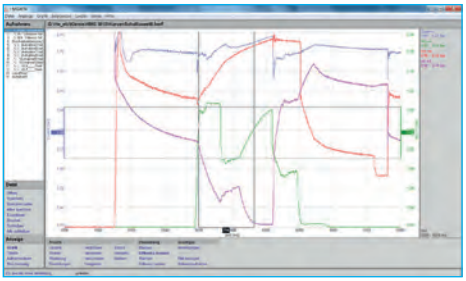

- Individual **comments** and measurement information can be added to the graph.

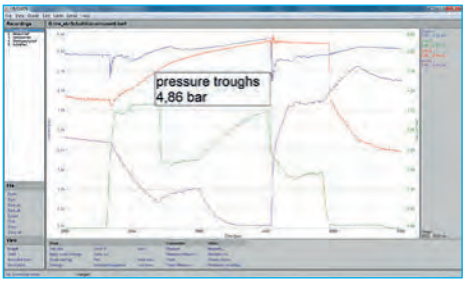

- **Overlay** of curves, for example to document the wear of a machine (new condition/current condition)

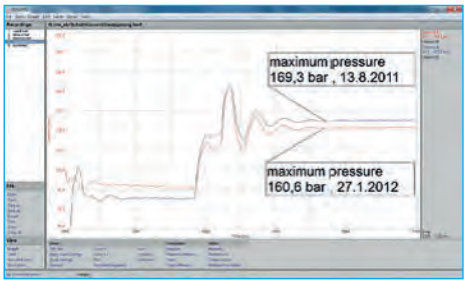

- Using mathematical operations (calculation functions, filter functions), new curves can be added.
- Snap-shot function:
  Comparable to the function of a digital camera, a picture can be taken immediately of any graph and saved as a jpg file.
- A professional measurement report can be produced at the click of a mouse:
  HMGWIN has an automatic layout function. Starting with a table of contents, all recorded data, descriptions and graphics and/or tables are combined into a professional report and saved as a pdf file.
- Online function (HMGWIN only):
  Starting, recording, and online display of measurements (similar to the function of an oscilloscope)

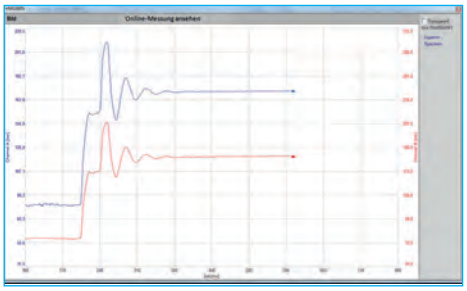

- Change of axis assignment of the recorded measurement parameters in graph mode (e.g. to produce a p-Q graph)

Technical data:

Analogue inputs	
Input signals 3 channels M12x1 Ultra-Lock flange sockets (5 pole) channel A .. channel C	HYDAC HSI analogue sensors HYDAC HSI SMART sensors
Accuracy	≤ ± 0.1 % FS
Digital input	
1 channel via M12x1 Ultra-Lock flange socket (5 pole) Channel D	Digital status (high/low) Frequency (0.01 .. 30,000 Hz)
Calculated channel	
Quantity	1 channel via virtual channel E
Sampling rate (dependent on number of active channels)	0.1 ms, max. 1 input channel 0.2 ms, max. 2 input channels 0.5 ms, all 3 input channels 1.0 ms, for Smart sensors
Resolution	12 bit
Memory	At least 100 measurement curves, each with 500,000 measured values
Display	3.5" colour display 7-segment display
Interfaces	1 USB, 1 serial port RS 232
CE mark	EN 61000-6-1 / 2 / 3 / 4
Safety	EN 61010
Protection class	IP 40
Environmental conditions	
Operating temperature	0 .. +50 °C
Storage temperature	-20 .. +60 °C
Relative humidity	0 .. 70 %
Dimensions	approx. 244 x 173 x 58 mm (B x H x T)
Weight	approx. 1,100 g

Note: **FS** (**F**ull **S**cale) = relative to complete measuring range

Dimensions:

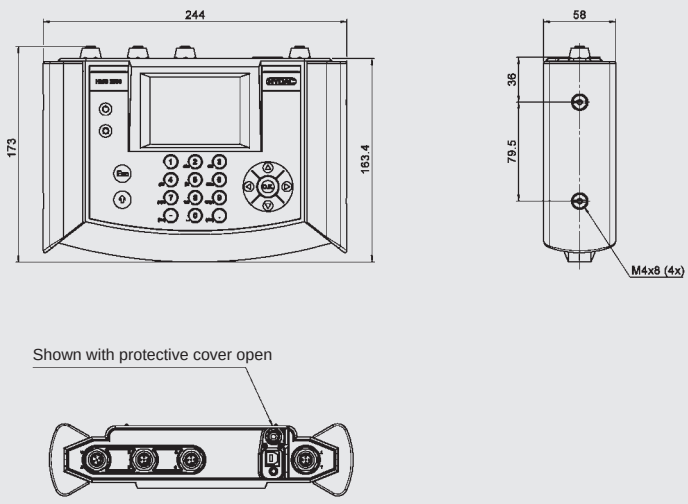

Ordering details:

HMG 2500 – 000 – X

Operating manual and documentation
D = German
E = English
F = French

Scope of delivery

- HMG 2500
- Power supply unit for 90 .. 230 V AC
- Operating manual
- Data carrier with USB drivers, HMGWIN software
- USB connector cable

Accessories

- Additional accessories, such as electrical and mechanical connection adapters, power supply units, etc. can be found in the "Accessories Service Devices" catalogue section.

Note:

The information in this brochure relates to the operating conditions and applications described.

For applications or operating conditions not described, please contact the relevant technical department.

Subject to technical modifications.

HYDAC ELECTRONIC GMBH
Hauptstraße 27, 66128 Saarbrücken
Germany
Telephone +49 (0)6897 509-01
Fax +49 (0)6897 509-1726
E-mail: electronic@hydac.com
Internet: www.hydac.com

HYDAC INTERNATIONAL

Portable Data Recorder HMG 4000

5.7" colour touchscreen
Up to 38 sensors can be connected
Automatic sensor recognition

Description:

The HMG 4000 is a top performance high-end portable measurement and data acquisition equipement. It was mainly developed for all measured values in relation with hydraulic systems, such as pressure, temperature, flow rate and linear position. Moreover, it provides a very high flexibility, even when it comes to evaluating other measured values. The main applications are servicing, maintenance or test rigs.

The data recorder has a very easy-to-operate user interface due to its large 5.7" touchscreen. The operator can access all of the device's functions and settings by means of clearly presented selection menus.

The HMG 4000 can record the signals of up to 38 sensors at once.

For this purpose, HYDAC ELECTRONIC offer special sensors which are automatically recognised by the HMG 4000 and whose parameters such as measured values, measuring ranges and measuring units can be set.
On the one hand, there are the HYDAC **HSI** sensors (**H**YDAC **S**ensor **I**nterface) for the measurement of pressure, temperature and flow rate, for the connection of which there are 8 analogue input channels.

Furthermore, there is the option of connecting HYDAC SMART sensors to these inputs. SMART sensors can display several different measured values at a time.

Up to 28 special HYDAC **HCSI** sensors (**H**YDAC **C**AN **S**ensor **I**nterface) can be connected additionally via the CAN bus port, also supporting automatic sensor recognition.

The HMG 4000 can optionally be connected to an existing CAN network. This enables the recording of measured data transmitted via CAN bus (e.g. motor speed, motor pressure) in combination with the measured data from the hydraulic system.

The device also offers measurement inputs for standard sensors with current and voltage signals.

The HMG 4000 rounds off the application with two additional digital inputs (e.g. for frequency or rpm measurements).

The most impressing feature of the HMG 4000 is its ability to record the dynamic processes of a machine in the form of a measurement curve and render them as a graph.

HYDAC software HMGWIN, which is specific to the HMG 4000, is supplied for convenient post-processing, rendering and evaluation of measurements on your computer.

Special features:

- Large, full graphics colour display 5.7" touchscreen
- Capable of recording up to 38 sensors at once, 8 analogue, 2 digital sensors and 28 **HCSI** sensors via CAN bus.
- Up to 100 measurement channels can be depicted simultaneously
- High-speed sampling rate, up to 8 sensors at 0.1 ms at a time.
- Quick and automatic basic setting by use of automatic sensor recognition
- Analogue inputs 0 .. 20 mA, 4 .. 20 mA Voltage 0 .. 50 V, -10 .. 10 V
- PT 100/1000 input
- Connection to a CAN bus system (also J1939)
- Simple and user-friendly operation, intuitive menu
- Practical, robust design
- Very large data memory for archiving measurement curves, enables the storage of 500 measurements with up to 8 million measured values.
- Various measurement modes:
  – Normal measuring
  – Fast curve recording
  – Long-term measurements
- Recording of dynamic processes "online" in real time
- Event-driven measurements with several triggering options
- Programming function for HYDAC switch devices
- PC interface via USB
- USB Host connection for USB memory sticks
- Convenient visualisation, archiving and data processing using the HMGWIN software supplied.

EN 18.103.1/02.18

Function:

- Clear and graphical colour selection menus intuitively guide the operator to all the device functions available and ensure fast implementation.

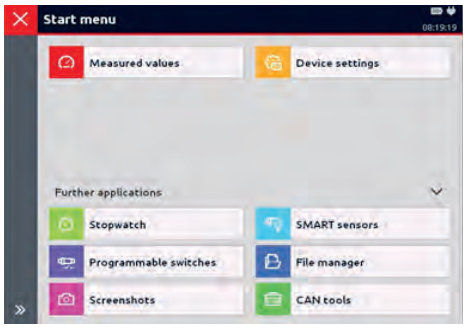

- The HMG 4000 can record the signals of up to **38 sensors simultaneously**.
  11 push-pull M12x1 input sockets are available as sensor interfaces. Apart from the push-pull sensor connection cable, M12x1 standard cables can also be used.
- The following sensors can be connected to the 8 black input sockets:
  - 8 analogue sensors (e.g. for pressure, temperature, and flow rate) with the special digital HSI interface (HYDAC Sensor Interface); this means the basic device settings (measured variable, measuring range and unit of measurement) are performed automatically
  - 8 standard analogue sensors with current and voltage signals
  - 8 Condition Monitoring sensors*) (SMART sensors); again, the basic device settings are carried out automatically
- The blue input socket provides 2 digital inputs, e.g. for 1 or 2 HYDAC speed sensors (2nd speed sensor connection via Y-adapter). Frequency measurements, counting functions or triggers can also be implemented for data recording.
- Different **CAN bus** functions can be implemented via the red input socket:
  - Connection of up to 28 HYDAC **HCSI** sensors (**H**YDAC **C**AN **S**ensor **I**nterface) by setting up a CAN bus with HCSI sensors and the relevant connection accessories, also with automatic parameterisation.
  - Connecting to a CAN bus, you have the option of evaluating up to 28 CAN messages.
  - Configuration of **CAN sensors**; the parameterisation is performed by means of EDS files, which can be stored and administrated in the HMG.
- The yellow input socket serves as the interface for HYDAC pressure, temperature or level switches with **I/O link** as well as for the programming device HPG P1. These devices can be parameterised by means of the HMG 4000.

- The most attractive function of the HMG 4000 surely is the capability of "online" recording and graphic illustration of dynamic processes, which means as a **measruing curve** in real time. During the recording process of a measuring curve, you can zoom in the curve sections of interest using gestures on the touchscreen.

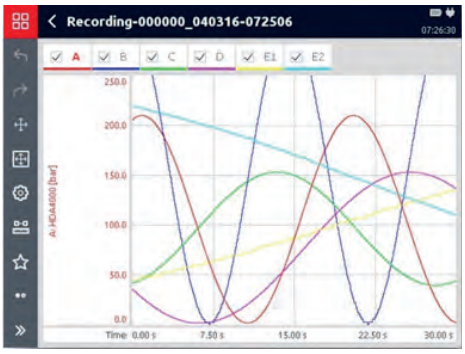

- For the purpose of recording highly dynamic processes, all 8 analogue input channels can be operated simultaneously at a **sampling rate** of 0.1 ms.
- The **data memory** for recording curves or logs can hold up to 8 million measured values.
  At least 500 of such data recordings in full length can be stored in an additional archiving memory.
- For targeted, **event-driven curves or logs**, the HMG 4000 has four independent triggers, which can be linked together logically. In addition, there is a "start/stop" condition, by means of which a measurement can be initiated or finished.
- User-specific device settings can be stored and re-loaded at any time as required. This means that repeat measurements can be carried out on a machine again and again using the same device settings.

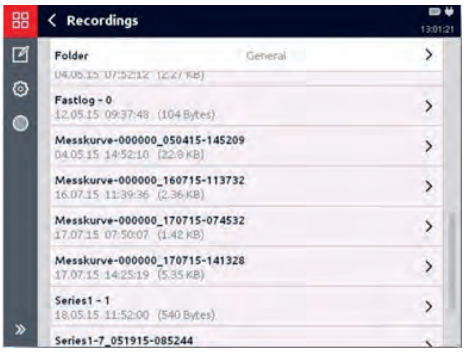

- Measured values, curves or texts are visualised on the **full graphics colour display** in different selectable formats and display forms.

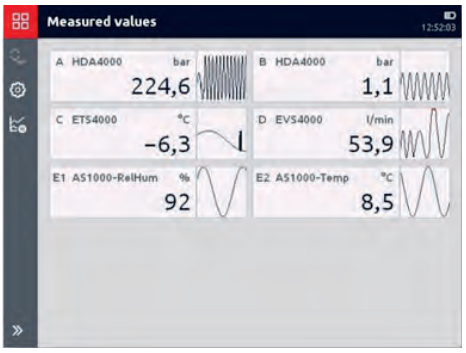

- Numerous useful and easy-to-use **auxiliary functions** are available, e.g. zoom, tracker, differential value graph creation and individual scaling, which are particularly for use when analysing the recorded measurement curves.

Figure: Using the magnifying gesture with two fingers, the operation is carried out – zooming in this case

- The communication between the HMG 4000 and a PC is performed via the built-in USB port. A HMG 4000 connected to your PC is recognised and depicted as a drive by the PC. You can thus move measured data to your PC conveniently. Optionally, data transfers can be carried out via a file manager by means of a USB memory stick.

HMGWIN:

The PC software HMGWIN is also supplied with the device. This software is a convenient and simple package for analysing and archiving curves and logs which have been recorded using the HMG 4000, or for exporting the data for integration into other PC programs if required.

In addition it is possible to operate the HMG 4000 directly from the computer. Basic settings can be made, and measurements can be started online and displayed directly on the PC screen in real-time as measurement curves progress.

HMGWIN can be run on PCs with Windows 7, Windows 8.1 and Windows 10 operating systems.

*) SMART sensors (Condition Monitoring ´sensors) are a generation of sensors from HYDAC which can provide a variety of different measurement variables.

Some examples of the numerous useful additional functions:

- Display of the measurements in graph form or as a table

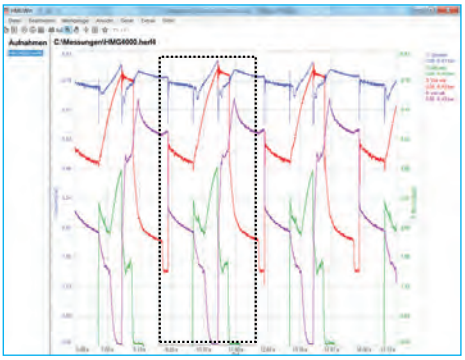

- **Zoom function:**
  Using the mouse, a frame is drawn around an interesting section of a measurement curve, which is then enlarged and displayed.

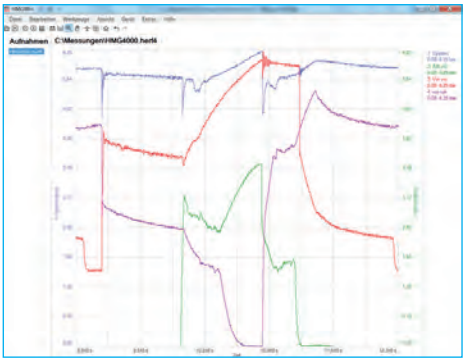

Fig.: Zoomed section of measurement curve

- **Accurate measurement** of the curves using the ruler tool (time values, amplitude values and differentials)

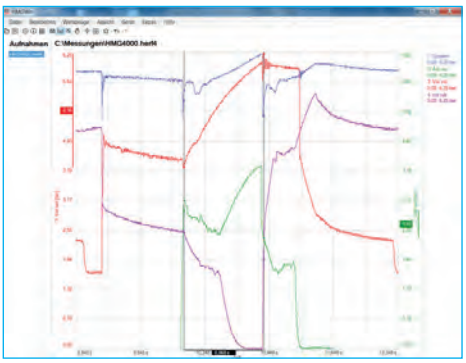

- Individual **comments** and measurement information can be added to the graph (function available mid-2017)

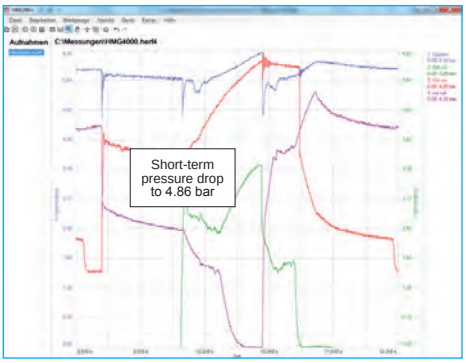

- **Overlay** of curves, for example to document the wear of a machine (new condition/current condition) (function available mid-2017)

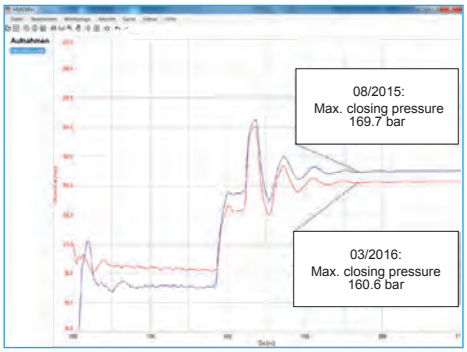

- Using mathematical operations (calculation functions, filter functions), new curves can be added.
- Snap-shot function:
  comparable to the function of a digital camera, a picture can be taken immediately of any graph and saved as a jpg file.
- A professional measurement report can be produced at the click of a mouse:
  HMGWIN has an automatic layout function. Starting with a table of contents, all recorded data, descriptions and graphics and/or tables are combined into a professional report and saved as a pdf file.
- Online function (HMGWIN only):
  Starting, recording, and online display of measurements (similar to the function of an oscilloscope)
- Change of axis assignment of the recorded measurement parameters in graph mode (e.g. to produce a p-Q graph)

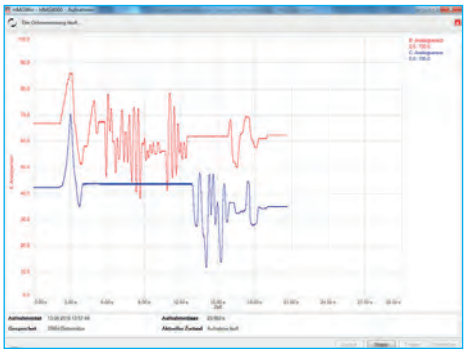

Technical data:

Analogue inputs	
Input signals 8 channels M12x1 Ultra-Lock flange sockets (5 pole) channel A .. channel H	HYDAC HSI analogue sensors HYDAC HSI SMART sensors Voltage signals: e.g. 0.5 .. 4.5 V, 0 .. 10 V etc. (input ranges for 0 .. 50 V, 0 .. 10 V, 0 .. 4.5 V, -10 .. 10 V) Current signals, e.g. 4 .. 20 mA, 0 .. 20 mA (input range 0 .. 20 mA) 1 x PT 100 / PT 1000 (at channel H)
Accuracy dependent on the input range	≤ ± 0.1 % FS at HSI, voltage, current ≤ ± 1 % FS at PT 100 / PT 1000
Digital inputs	
Input signals 2 channels M12x1 Ultra-Lock flange socket (5 pole) channel I, J	Digital status (high/low) Frequency (0.01 .. 30,000 Hz) PWM duty cycle Durations (e.g. period duration)
Level	Switching threshold/switch-back threshold: 2 V / 1 V Max. input voltage: 50 V
Accuracy	≤ ± 0.1 %
CAN	
Input signals 28 channels M12x1 Ultra-Lock flange socket (5 pole) channel K1 .. K28	HYDAC HCSI sensors, CAN, J1939, CANopen PDO, CANopen SDO
Baud rate	10 kbit/s .. 1 Mbit/s
Accuracy	≤ ± 0.1 %
Calculated channels	
Quantity	4 channels via virtual port L (channel L1 .. channel L4)
Programming interface	
For HYDAC I/O-Link devices	1 channel via M12x1 Ultra-Lock flange socket (5 pole)
Voltage supply	
Network operation	9 .. 36 V DC via standard round plug 2.1 mm
Battery	Lithium-Nickel-Kobalt-Aluminium-Oxide 3.6 V; 9300 mAh
Battery charging time	approx. 5 hours
Battery life	w/o sensors approx. 11 hours with 2 sensors approx. 9 hours with 4 sensors approx. 7 hours with 8 sensors approx. 4 hours
Display	
Type	TFT-LCD Touchscreen
Size	5.7"
Resolution	VGA 640 x 480 Pixel
Backlight	10 .. 100 % adjustable
Interfaces	
USB Host	
Plug-in connection	USB socket, Type A, screened
USB Standard	2.0 (USB Full speed)
Transmission rate	12 Mbit/s
Supply voltage	5 V DC
Power supply	100 mA max.
Protection	Short-circuit protection to GND (0 V)
USB Slave	
Plug-in connection	USB socket, Type B, screened
USB Standard	2.0 (USB High speed)
Transmission rate	480 Mbit/s
Supply voltage	5 V DC
Power supply	100 mA max.
Protection	Short-circuit protection to GND (0 V)
Memory	
Measured value memory	16 GB for min. 500 measurements, each containing 8 million measured values
Technical standards	
EMC	IEC 61000-4-2 / -3 / -4 / -5 / -6 / -8
Safety	EN 61010
Protection class	IP 40
Environmental conditions	
Operating temperature	0 .. 50 °C
Storage temperature	-20 .. 60 °C
Relative humidity	0 .. 70 %
Max. operating altitude	2000 m
Dimensions	approx. 285 x 189 x 87 mm (B x H x T)
Weight	approx. 1,850 g
Housing material	Plastic (Elastollan® R 3000 – TPU-GF)

Order details:

HMG 4000 – 000 – X

Operating manual and documentation

D = German
E = English
F = French

Scope of delivery

- HMG 4000
- Power supply unit for 90 .. 230 V AC
- Tether strap
- Operating manual
- Data carrier with USB drivers and HMGWIN software
- USB connector cable

Accessories

- Pressure, temperature and flow rate measuring transmitter with HSI sensor detection as well as CAN pressure measuring transmitter with HCSI sensor detections – see separate data sheet
- Additional accessories, such as the push-pull sensor connection cables, connection accessories for the HCSI CAN sensors, mechanical connection adapters, etc. can be found in the "Accessories Service Devices" catalogue section.

Note:

The information in this brochure relates to the operating conditions and applications described.

For applications or operating conditions not described, please contact the relevant technical department.

Subject to technical modifications.

HYDAC ELECTRONIC GMBH
Hauptstraße 27, 66128 Saarbrücken
Germany
Telephone +49 (0)6897 509-01
Fax +49 (0)6897 509-1726
E-mail: electronic@hydac.com
Internet: www.hydac.com

Accessories Overview

The perfect accessory for any HYDAC product!

Whether for sensors or for measurement, display and service units, the extensive HYDAC accessories portfolio has a comprehensive selection of suitable accessories for almost any application.

	Page
SENSOR ACCESSORIES	
Mounting and installation	
Adapters for pressure sensors	467
Mounting accessories for HDA 8000, EDS 8000 and EDS 810	468
Mounting accessories for EDS 3000, ETS 3000, ENS 3000, HNS 3000 and AS 3000	468
Mounting accessories for EDS 300 and ETS 300	469
Mounting accessories for EDS 1700 and ETS 1700	470
Installation accessories for ETS 3000	470
Connection accessories for ENS 3000	470
Connection accessories for HLB 1400	471
Connection accessories for AS 1000 and AS 3000	471
Distance and position sensor accessories	
Magnets for HLT 700, HLT 1000 and HLT 2000	472
Mounting and installation accessories for HLT 2000	474
Electrical connection	
For electrical connection code "4" (Binder series 714 M18)	475
For electrical connection code "5" (male EN 175301-803 / ISO 4400)	475
For electrical connection code "6" and "006" (male M12x1, 4 pole)	475
For electrical connection code "7" (male DIN EN 175201-804)	476
For electrical connection code "8", "008" and "C61" (male M12x1, 5 pole)	476
For electrical connection code "P" and "00P" (male M12x1, 8 pole)	477
For electrical connection code "M06" (male M16, 6 pole)	478
For electrical connection code "M08" (male M16, 8 pole)	478
For electrical connection code "S00" (CONTACT male connector, 12 pole)	479
For electrical connection code "M06", "M08" and "M24" (separate male connector Molex, 3 pole) for HLT 724 and HLT 1100	479
MEASURING INSTRUMENT AND DISPLAY UNIT ACCESSORIES	
Sensors with automatic sensor recognition	
Pressure transmitter HDA 4700 with HYDAC Sensor Interface (HSI)	483
Temperature transmitter ETS 4100 with HYDAC Sensor Interface (HSI)	485
Flow rate transmitter EVS 3100 with HYDAC Sensor Interface (HSI)	487
Pressure transmitter HDA 4700 with HYDAC CAN Sensor Interface (HCSI)	489
Temperature transmitter ETS 4100 with HYDAC CAN Sensor Interface (HCSI)	491
Further accessories for HMG 500 / 510 / 2500 / 4000	
Case, power supply units, adapters, connection cables, rpm probe, etc.	493
PROGRAMMING DEVICES AND ADAPTERS	
HPG 3000, HPG P1 and ZBE P1	495

Accessories for sensors

Mounting and installation
Adapters for pressure sensors:

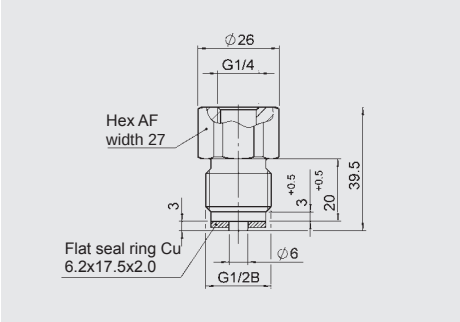

ZBM 01

Adapter female thread G1/4 – male thread G1/2 B, DIN EN 837-1

Part no.: 257276

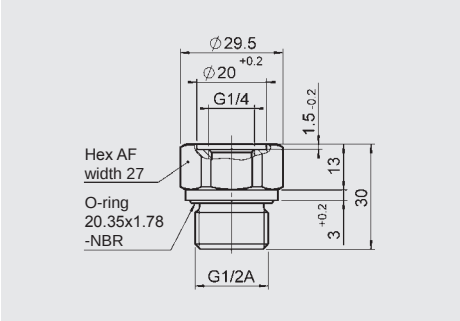

ZBM 02

Adapter female thread G1/4 – male thread G1/2 A, ISO 1179-2

Part no.: 257277

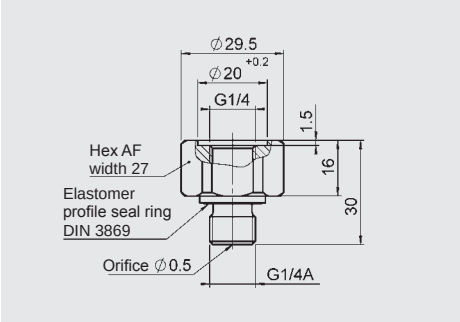

ZBM 13

Adapter female thread G1/4 – male thread G1/4 A, with orifice 0.5 mm

Part no.: 906968

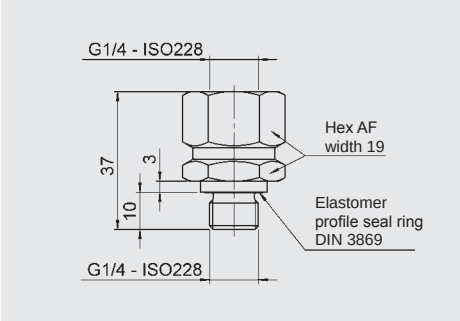

ZBM 14

Adapter female thread G1/4 – male thread G1/4 (rotating)

Part no.: 907818

Mounting accessories for HDA 8000, EDS 8000 and EDS 810:

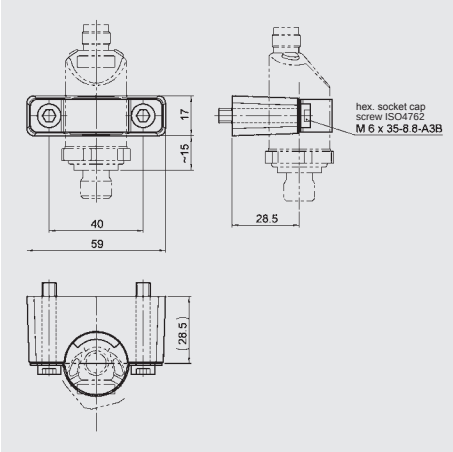

ZBM 8000

Clamp for wall-mounting
– screw-type fitting –

(Material of lower section:
TPE Santoprene 10187;
Material of top section:
steel strip DIN 95381-1.4571)

Part no.: 3546755

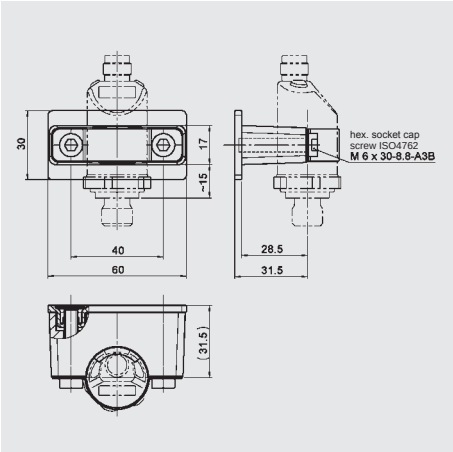

ZBM 8100

Clamp for wall-mounting
– weld-type fitting –

(Material of welding bridge:
QSTE340TM, zinc coating
EN 12329 FE/ZN8/B;
Material of lower section:
TPE Santoprene 10187;
Material of top section:
steel strip DIN 95381-1.4571)

Part no.: 3546757

Mounting accessories for EDS 3000, ETS 3000, AS 3000, ENS 3000 and HNS 3000:

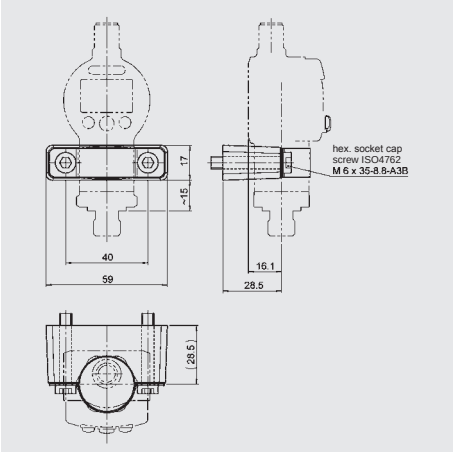

ZBM 3000

Clamp for wall-mounting
– screw-type fitting –

(Material of lower section:
TPE Santoprene 10187;
Material of top section:
steel strip DIN 95381-1.4571)

Part no.: 3184630

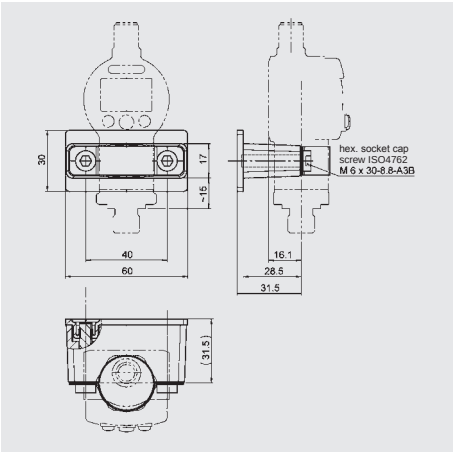

ZBM 3100

Clamp for wall-mounting
– weld-type fitting –

(Material of welding bridge:
QSTE340TM, zinc coating
EN 12329 FE/ZN8/B;
Material of lower section:
TPE Santoprene 10187;
Material of top section:
steel strip DIN 95381-1.4571)

Part no.: 3184632

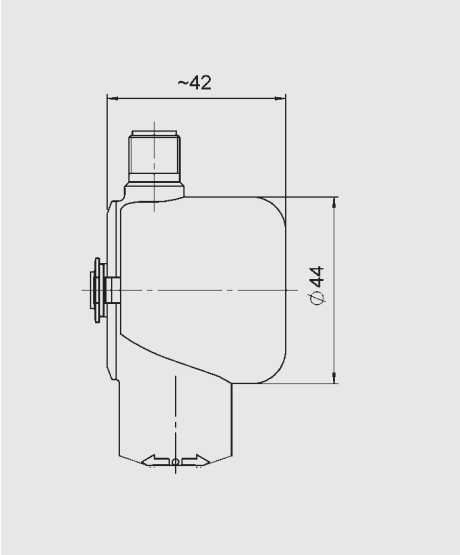

ZBM 3200

Splash guard

(Material:
Elastollan S60 A15 SPF 000)

Part no.: 3201919

Mounting accessories for EDS 300 and ETS 300:

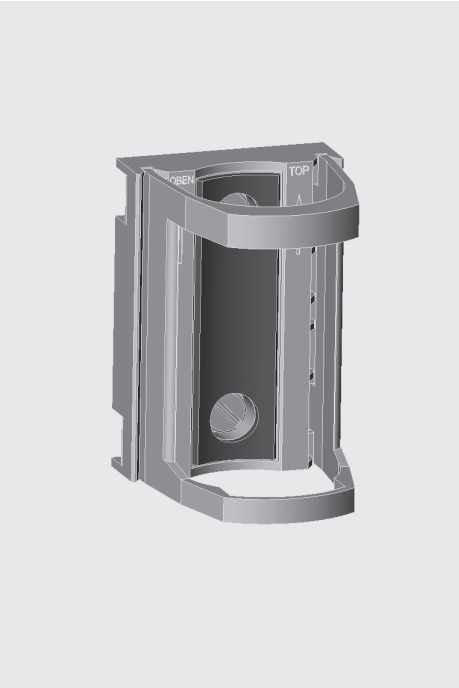

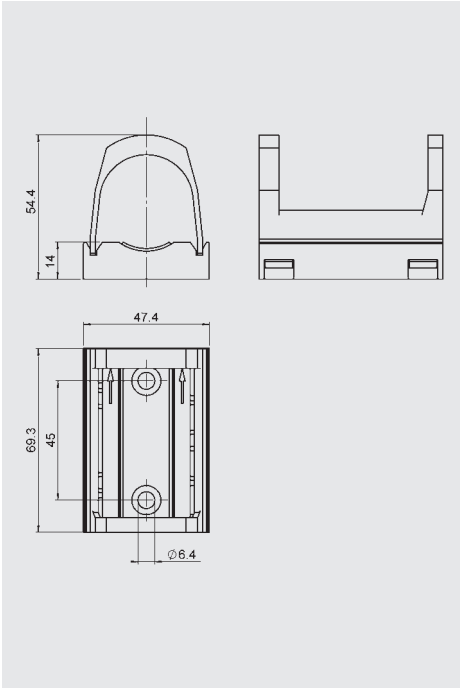

ZBM 300

Clamp for wall-mounting
– screw-type fitting –

(Material polypropylene)

Part no.: 906385

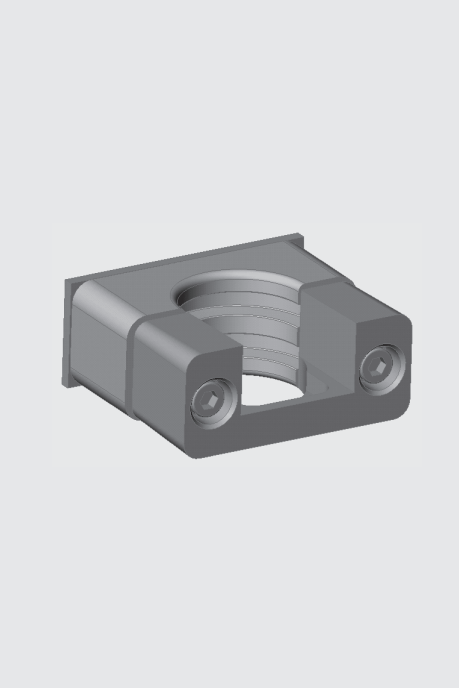

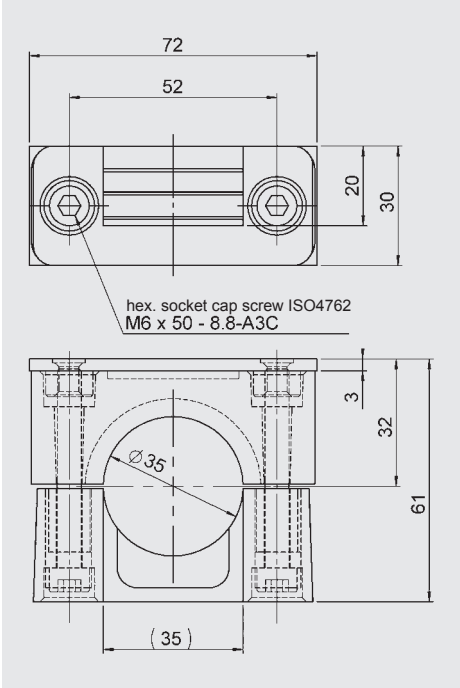

ZBM 310

Clamp for wall-mounting
– weld-type fitting –

(Material polypropylene,
aluminium AlSi12, steel)

Part no.: 6011511

Mounting accessories for EDS 1700 and ETS 1700:

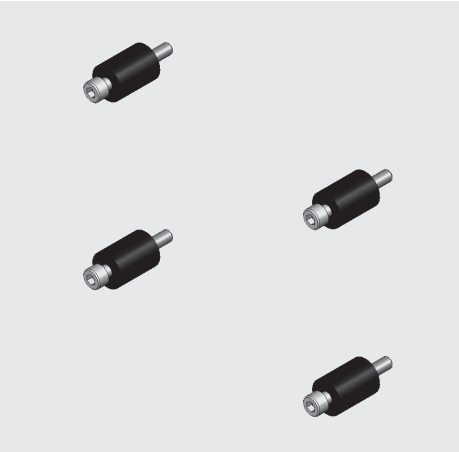

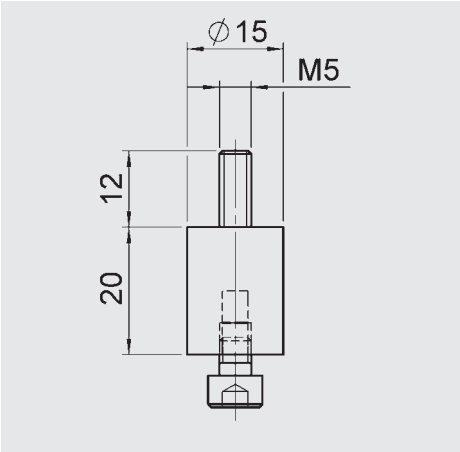

Vibration mounts

Part no.: 257492

Installation accessories for ETS 3000 (100 mm):

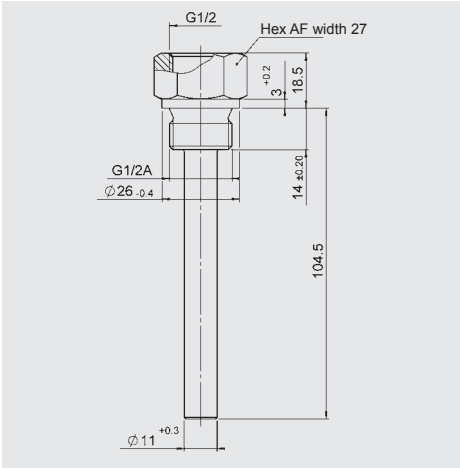

Protective sleeve for tank installation

(Material CuZn39Pb3 - DIN 1763, electro-nickel-plated)

Part no.: 909640

Connection accessories for ENS 3000:

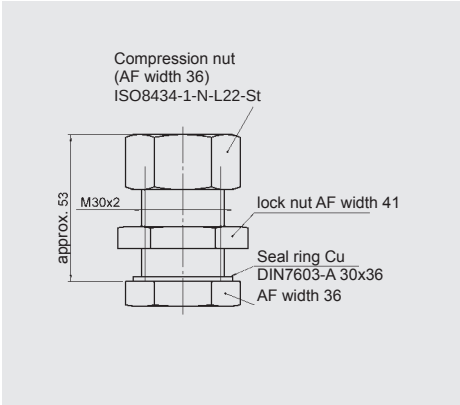

ZBM 19

Straight bulkhead connection acc. to ISO 8434

Part no.: 908738

Note: Not suitable for ENS with 250 mm rod length

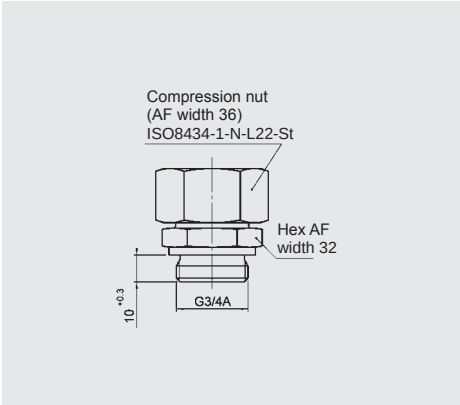

ZBM 20

Straight male stud coupling acc. to ISO 8434

Part no.: 908739

Connection accessories for HLB 1400:

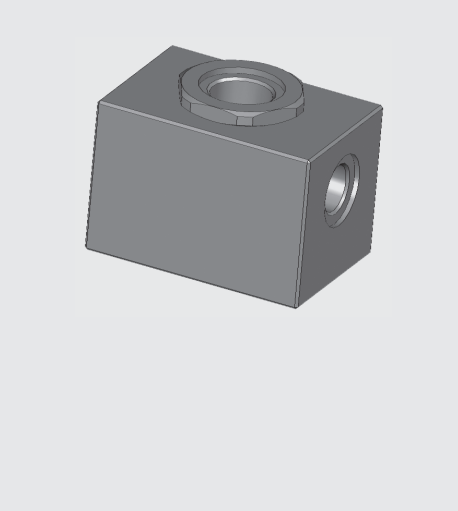

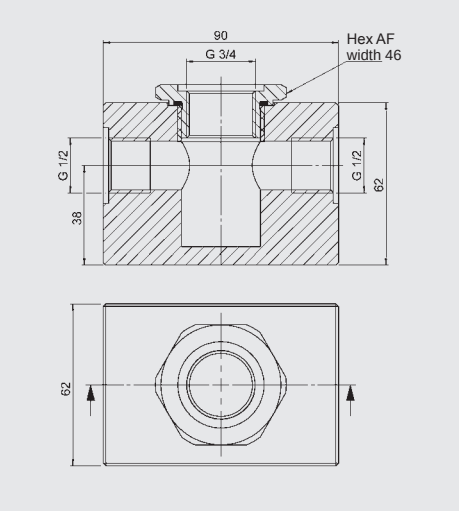

ZBM 21 (Flow)

Mounting block
for flow rates > 2 l/min

Part no.: 3244260

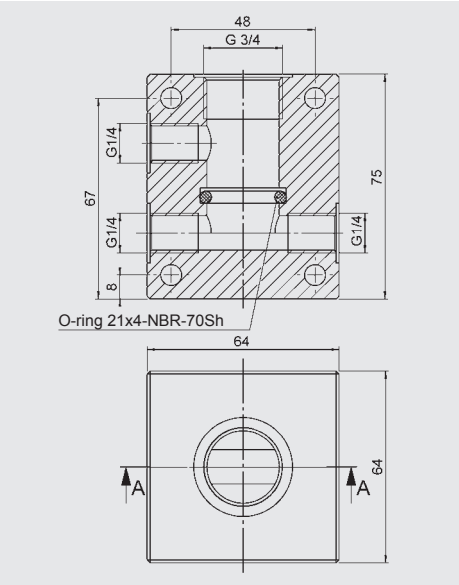

ZBM 23 (Low Flow)

Mounting block
for flow rates from 0.5 .. 10 l/min

Part no.: 3299331

Connection accessories for AS 1000 and AS 3000:

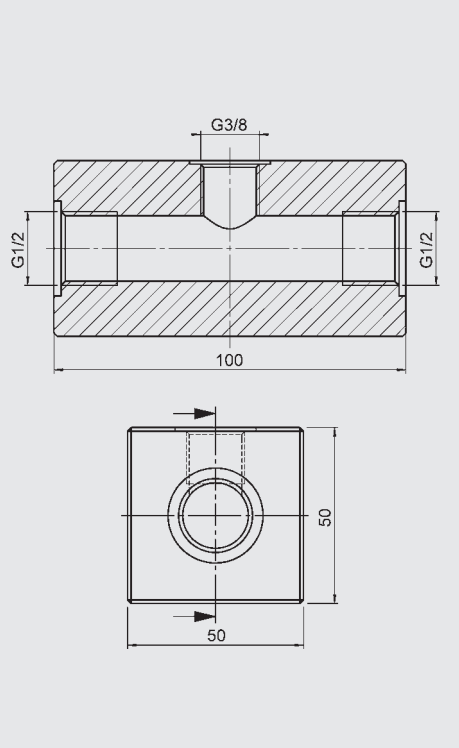

ZBM 22

Mounting block for AquaSensor

Part no.: 3248511

Distance and position sensor accessories
Magnets for HLT 700, HLT 1000 and HLT 2000:

Distance sensors	Magnets								
	ZBL MR17.4	ZBL MR22	ZBL MR 25.4	ZBL MR 33	ZBL MR-HLT700	ZBL MF38-18	ZBL MU38-20	ZBL MV63	ZBL MVS35-39
						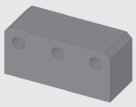	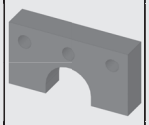		
HLT 1100	✓	✓	✓	✓			✓	✓	
HLT 2100	✓	✓	✓	✓			✓	✓	
HLT 2102/3	✓	✓	✓	✓			✓	✓	
HLT 2150	✓	✓	✓	✓			✓	✓	
HLT 2500-F1						✓			
HLT 2500-L2							✓	✓	✓
HLT 2550							✓	✓	✓
HLT 700					✓				

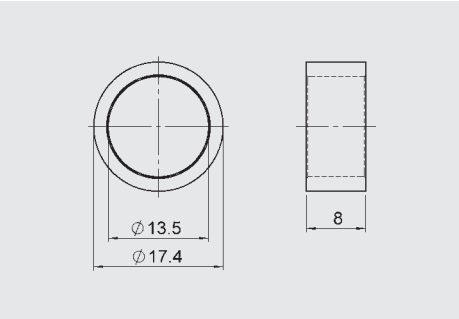

ZBL MR17.4
Position magnet for HLT 1x00 and HLT 21xx
Part no.: 6119372

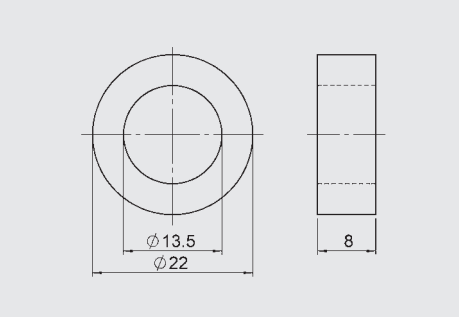

ZBL MR22
Position magnet for HLT 1x00 and HLT 21xx
Part no.: 6084453

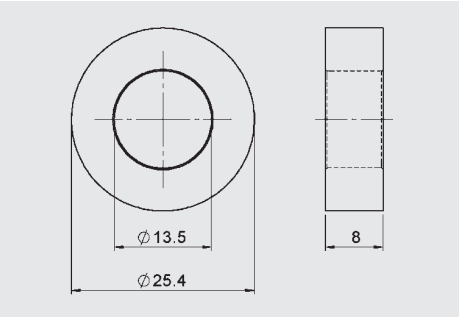

ZBL MR25.4
Position magnet for HLT 1x00 and HLT 21xx
Part no.: 6141689

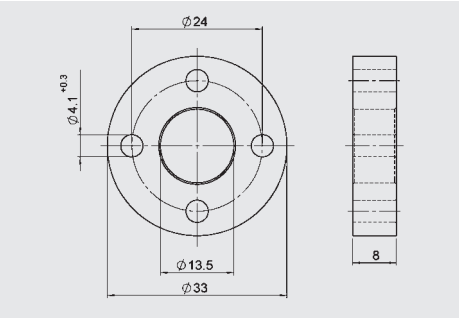

ZBL MR33
Position magnet for HLT 1x00 and HLT 21xx
Part no.: 6084207

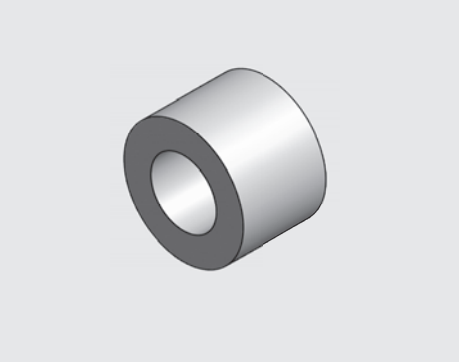

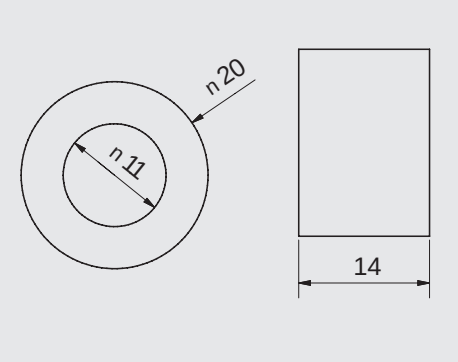

ZBL MR-HLT700

Position magnet for HLT 700

Part no.: 4105026

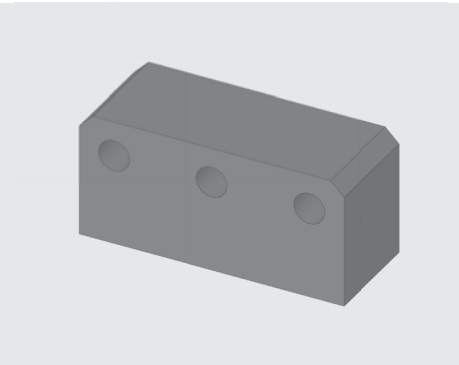

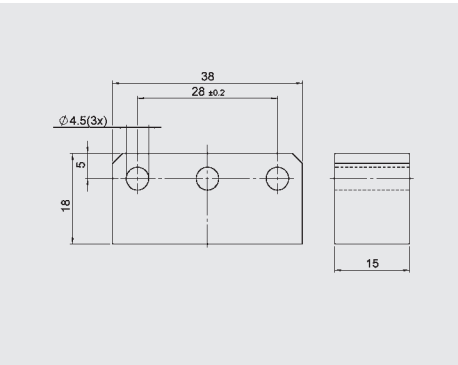

ZBL MF38-18

Position magnet for HLT 2500-F1

Part no.: 6084456

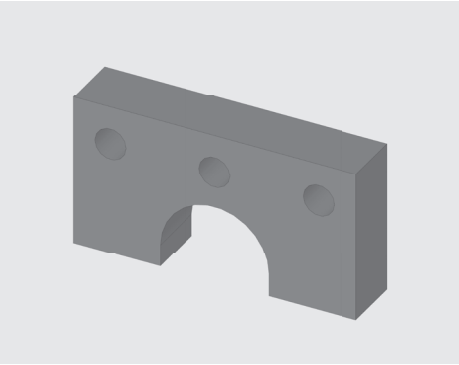

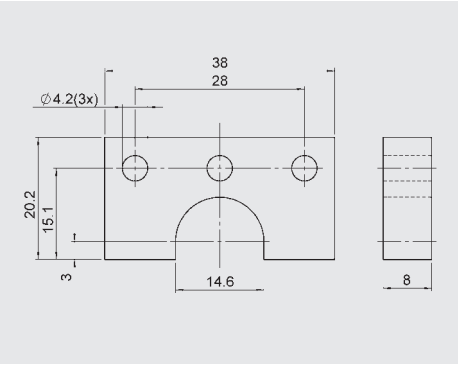

ZBL MU38-20

Position magnet for HLT 1x00, HLT 21xx and HLT 25xx-L2

Part no.: 6084455

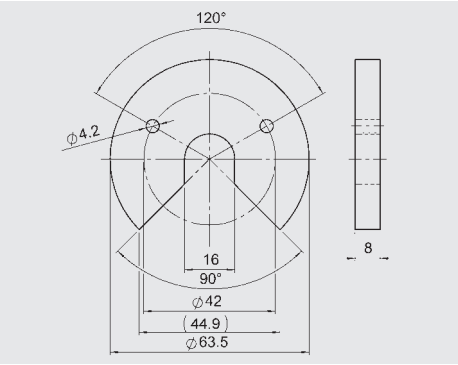

ZBL MV63

Position magnet for HLT 1x00, HLT 21xx and HLT 25xx-L2

Part no.: 6084454

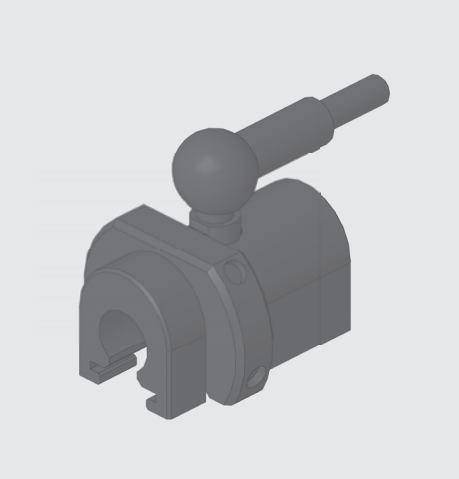

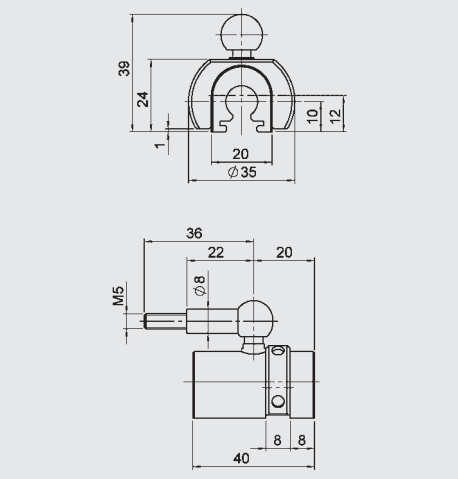

ZBL MVS35-39

Magnet slide for HLT 25xx-L2

Part no.: 6105654

Mounting and installation accessories for HLT 2000:

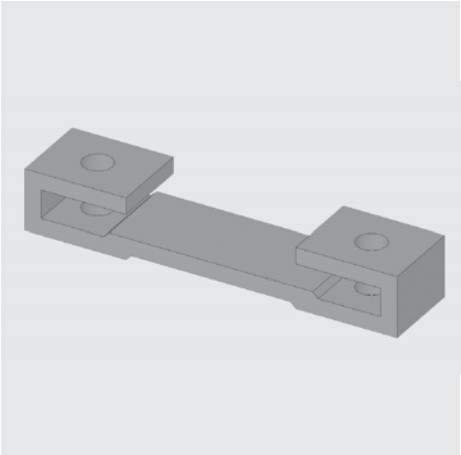

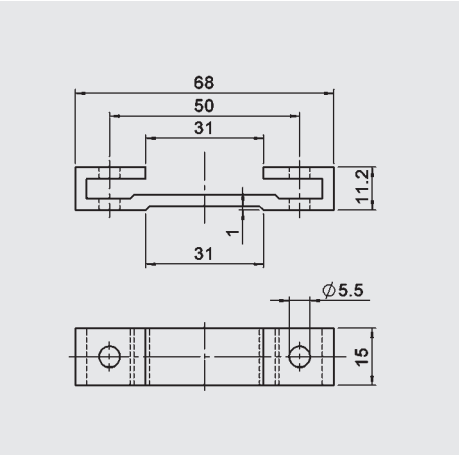

Mounting kit
for HLT 25xx
Part no.: 6105653

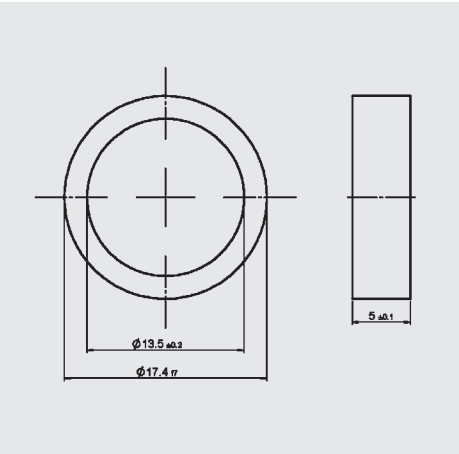

Intermediate ring AD17.4xID13.5x5
for HLT 21xx
Part no.: 3903233

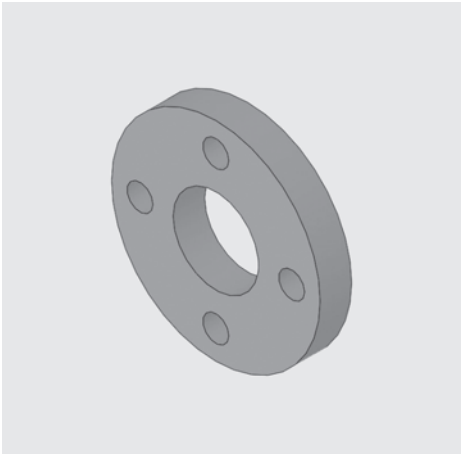

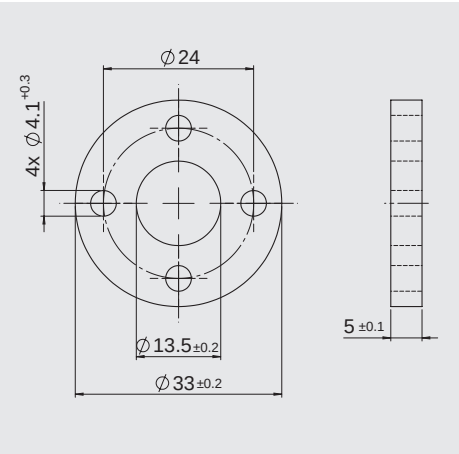

Intermediate ring AD33xID13.5x5
for HLT 25xx
Part no.: 3887829

Electrical connection

For electrical connection code "4" (Binder series 714 M18):

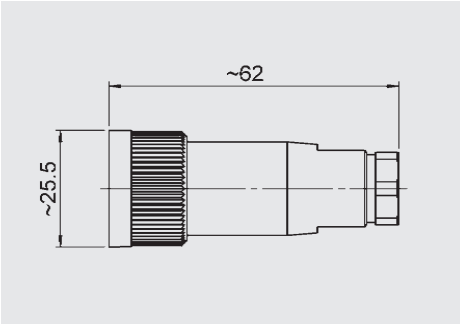

ZBE 02
Mating connector, Binder series 714 M18
4 pole, straight
Cable diameter: 6.5 .. 8 mm
Part no.: 609479

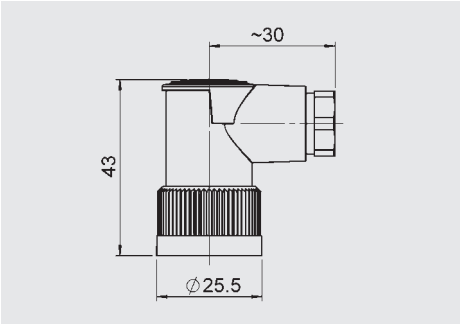

ZBE 03
Mating connector, Binder series 714 M18
4 pole, right-angle
Cable diameter: 6.5 .. 8 mm
Part no.: 609480

For electrical connection code "5" (male EN 175301-803):

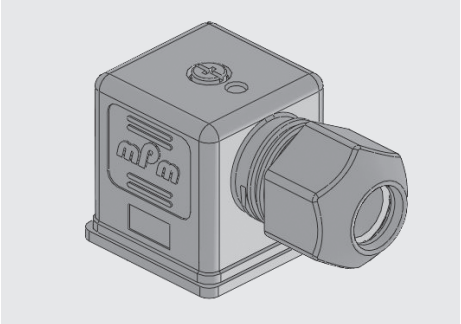

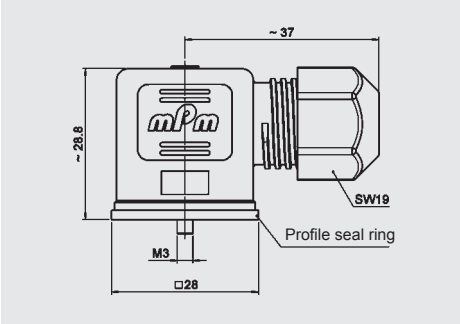

ZBE 01
Mating connector
EN175301-803
3 pole + PE, right-angle
Cable diameter: 4.5 .. 7 mm
Part no.: 905701

For electrical connection code "6" and "006" (male M12x1, 4 pole):

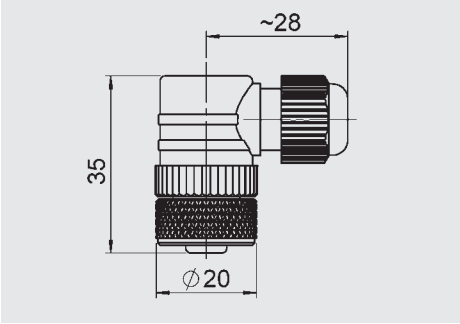

ZBE 06
Mating connector M12x1
4 pole, right-angle
Cable diameter: 2.5 .. 6.5 mm
Part no.: 6006788

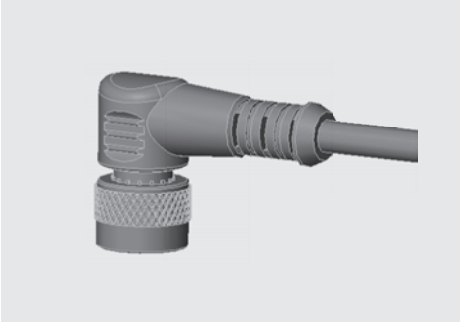

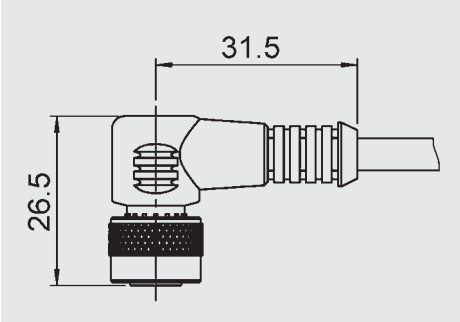

ZBE 06-02
Mating connector M12x1
4 pole, right-angle
with 2 m cable
Part no.: 6006790

ZBE 06-05
Mating connector M12x1
4 pole, right-angle
with 5 m cable
Part no.: 6006789

	Colour code
Pin 1	brown
Pin 2	white
Pin 3	blue
Pin 4	black

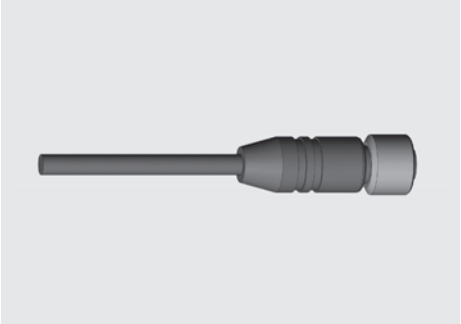

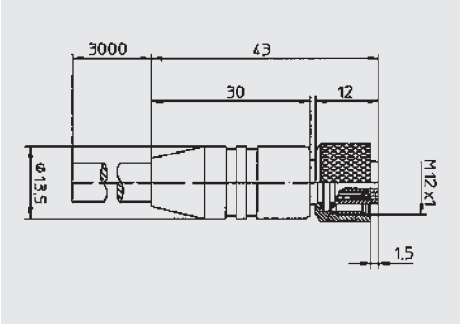

ZBE 06S-03

Mating connector M12×1
4 pole, straight
with 3 m cable, shielded

Part no.: 6098243

ZBE 06S-05

Mating connector M12×1
4 pole, straight
with 5 m cable, shielded

Part no.: 6143284

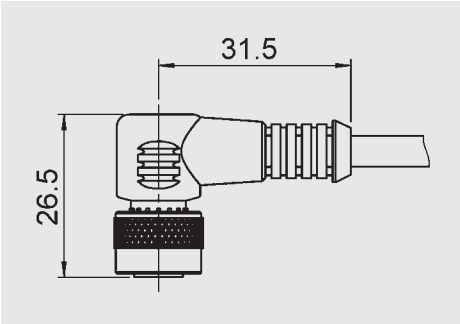

ZBE 06S-05

Mating connector M12x1
4 pole, right-angle
with 5 m cable, shielded

Part no.: 6044891

	Colour code
Pin 1	brown
Pin 2	white
Pin 3	blue
Pin 4	black

For electrical connection code "7" (male DIN EN 175201-804):

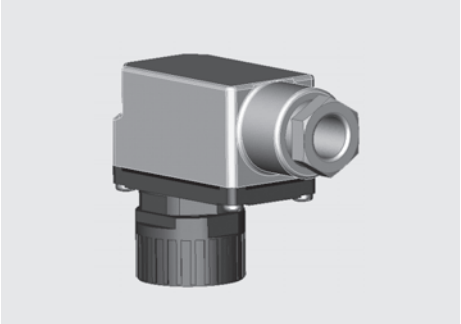

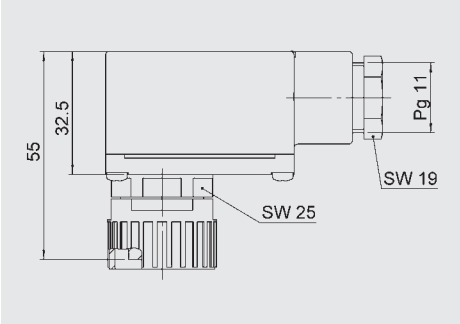

ZBE 10

Mating connector DIN EN 175201-804
6 pole + PE, right-angle
Cable diameter: 7 .. 9 mm

Part no.: 654527

For electrical connection code "8", "008" and "C61" (male M12x1, 5 pole):

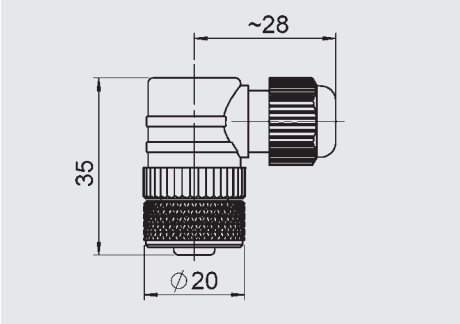

ZBE 08

Mating connector M12x1
5 pole, right-angle
Cable diameter: 2.5 .. 6.5 mm

Part no.: 6006786

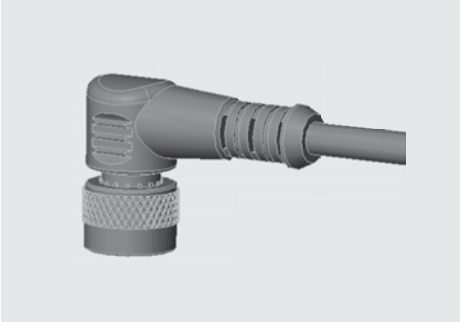

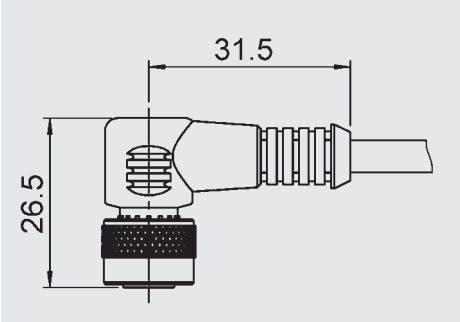

ZBE 08-02

Mating connector M12x1
5 pole, right-angle
with 2 m cable

Part no.: 6006792

ZBE 08-05

Mating connector M12x1
5 pole, right-angle
with 5 m cable

Part no.: 6006791

	Colour code
Pin 1	brown
Pin 2	white
Pin 3	blue
Pin 4	black
Pin 5	grey

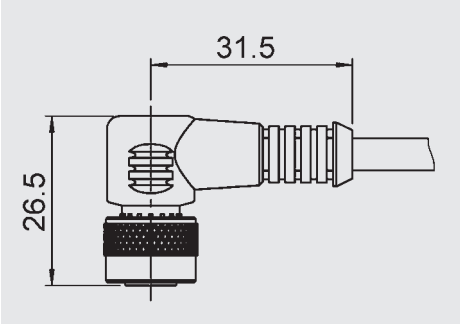

ZBE 08S-02
Mating connector M12x1
5 pole, right-angle
with 2 m cable, shielded
Part no.: 6019455

ZBE 08S-05
Mating connector M12x1
5 pole, right-angle
with 5 m cable, shielded
Part no.: 6019456

ZBE 08S-10
Mating connector M12x1
5 pole, right-angle
with 10 m cable, shielded
Part no.: 6023102

	Colour code
Pin 1	brown
Pin 2	white
Pin 3	blue
Pin 4	black
Pin 5	grey

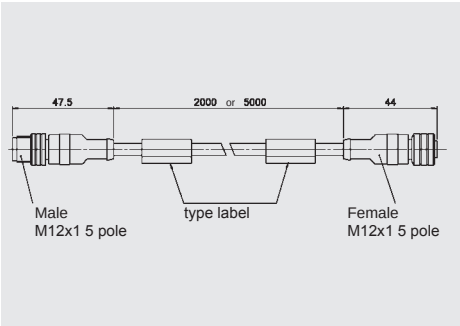

ZBE 30-02
Connection cable M12x1
male/female
5 pole, 2 m
Part no.: 6040851

ZBE 30-05
Connection cable M12x1
male/female
5 pole, 5 m
Part no.: 6040852

For electrical connection code "P" and "00P" (male M12x1, 8 pole):

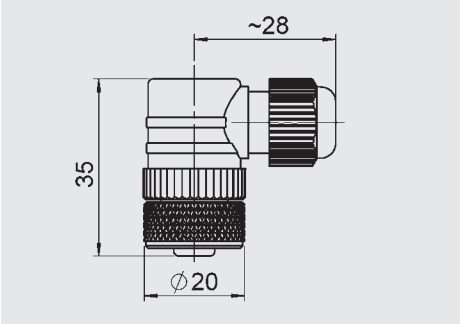

ZBE 0P
Mating connector M12x1
8 pole, right-angle
Cable diameter: 4 .. 8 mm
Part no.: 6055444

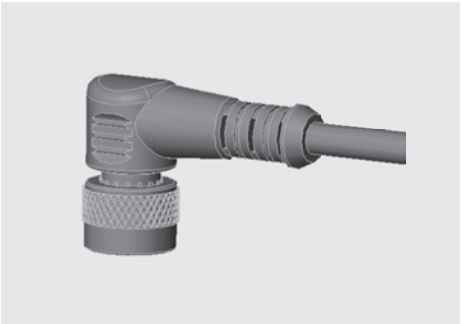

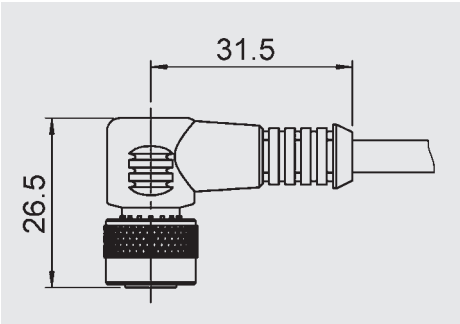

ZBE 0P-02
Mating connector M12x1
8 pole, right-angle
with 2 m cable
Part no.: 6052697

ZBE 0P-05
Mating connector M12x1
8 pole, right-angle
with 5 m cable
Part no.: 6052698

	Colour code
Pin 1	white
Pin 2	brown
Pin 3	green
Pin 4	yellow
Pin 5	grey
Pin 6	pink
Pin 7	blue
Pin 8	red

For electrical connection code "M06" (male M16, 6 pole):

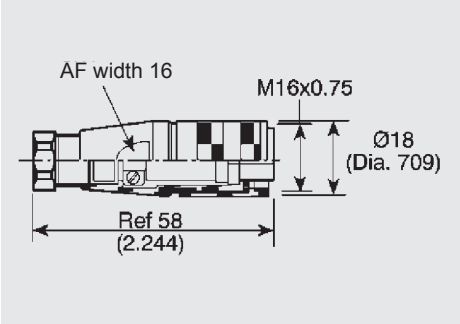

Mating connector C091, 6 pole, straight

Part no.: 654653

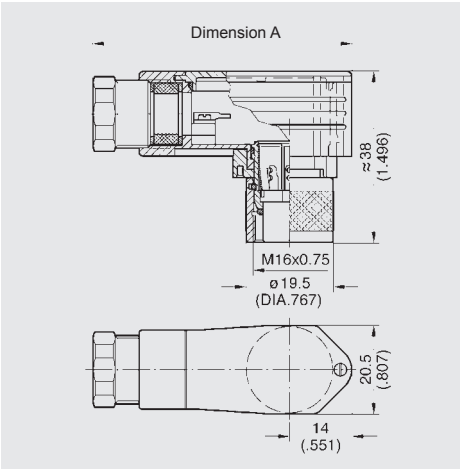

Mating connector C091, 6 pole, right angle

Part no.: 6174764

For electrical connection code "M08" (male M16, 8 pole):

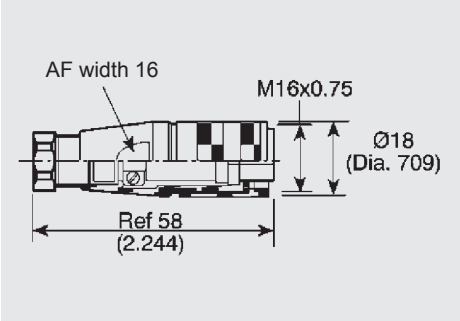

Mating connector C091, 8 pole, straight

Part no.: 6123255

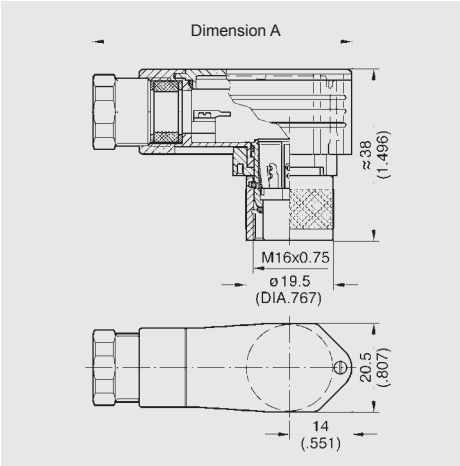

Mating connector C091, 8 pole, right angle

Part no.: 6174765

For electrical connection code "S00" (CONTACT male connector, 12 pole):

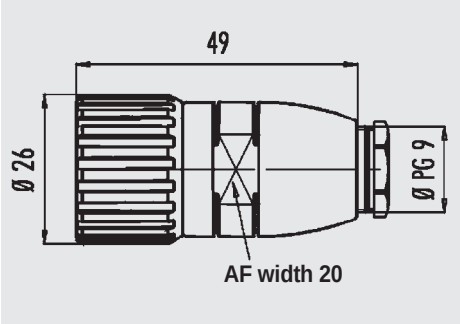

Cable connector M23, 12 pole, straight

Part no.: 6120462

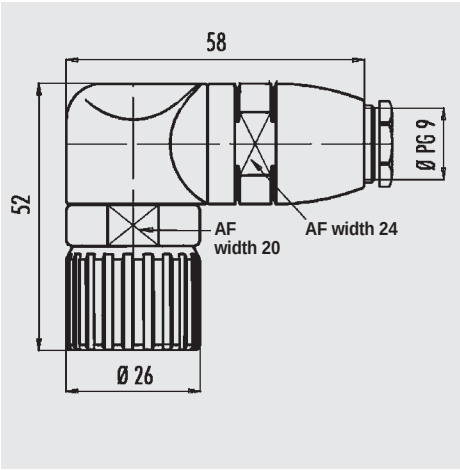

Cable connector M23, 12 pole, right-angle

Part no.: 6120463

For electrical connection code "M06", "M08" and "M24" (separate male connector Molex, 3 pole) for HLT 724 and HLT 1100:

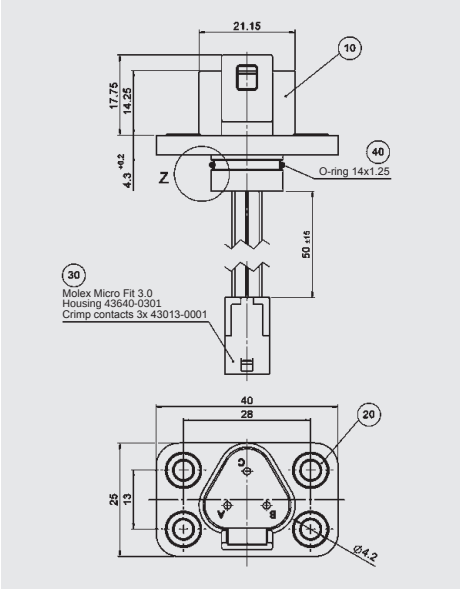

ZBE 50

Male flange connector DT04, 3 pole Molex

Part no.: 4143770

Pin assignment:

DT04	Molex
A	1
B	2
C	3

Note:

The information in this brochure relates to the operating conditions and applications described.

For applications or operating conditions not described, please contact the relevant technical department.

Subject to technical modifications.

HYDAC ELECTRONIC GMBH
Hauptstr. 27, 66128 Saarbrücken
Germany
Telephone +49 (0)6897 509-01
Fax +49 (0)6897 509-1726
e-mail: electronic@hydac.com
Internet: www.hydac.com

Accessories for measuring instruments, display and service units

Sensors with automatic sensor recognition

The pressure, temperature and flow rate transmitters with HSI sensor recognition have been specially developed for use in conjunction with HYDAC measuring instruments HMG 5x0, 2500 and 4000 as well as the Condition Monitoring Unit CMU 1000.

For data transmission, these sensors have an HSI interface (**H**YDAC **S**ensor **I**nterface). This interface enables the above-mentioned HYDAC measuring instruments to automatically recognise the HSI sensor and then automatically apply all the necessary basic device settings.

To extend the number of sensors on the HMG 4000, the special HCSI sensors, based on the CAN protocol, were developed.

These HCSI sensors, easily identified with their red type label, are automatically recognised along with all their characteristics by the HMG 4000.

Up to 28 HCSI sensors can be connected to the HMG 4000 simultaneously via the Y-distributor (available as an accessory) to set up an HMG-internal bus system.

The data is transferred via a CAN-based bus protocol.

Pressure Transmitter HDA 4700-H

Relative pressure | **Accuracy 0.25 %**

With HSI sensor recognition

Description:

The pressure transmitter HDA 4700-H with HSI sensor recognition was specially developed for use in conjunction with the HYDAC measuring instruments HMG 5X0, HMG 2500, HMG 4000 and CMU 1000.

For data transmission, the HDA 4700-H has an HSI interface (**H**YDAC **S**ensor **I**nterface).

The HSI sensors are automatically recognised via the HSI interface by the above-mentioned HYDAC measuring instruments and all necessary basic device settings are taken from each sensor.

Like all pressure transmitters of the HDA 4700 series, the HDA 4700-H also has a very accurate and robust sensor cell with a thin-film strain gauge on a stainless steel membrane. It combines excellent technical data with a very compact design.

Technical data:

Input data											
Measuring ranges[1)]	bar	-1 .. 9	16	60	100	250	400	600	1000	1600	2000
Overload pressures	bar	20	32	120	200	500	800	1000	1600	2400	3000
Burst pressure	bar	100	200	300	500	1000	2000	2000	3000	3000	4000
Mechanical connection					G1/4 A ISO 1179-2 G1/2 B DIN EN 837						
Tightening torque, recommended					20 Nm (G1/4); 40 Nm (G1/2)						
Parts in contact with fluid					Mech. connection: Stainless steel Seal: FKM						
Output data											
Output signal					**HSI** (**H**YDAC **S**ensor **I**nterface) Automatic sensor recognition						
Accuracy acc. to DIN 16086, terminal based					≤ ± 0.25 % FS typ. ≤ ± 0.5 % FS max.						
Accuracy, B.F.S.L.					≤ ± 0.15 % FS typ. ≤ ± 0.25 % FS max.						
Temperature compensation Zero point					≤ ± 0.008 % FS / °C typ. ≤ ± 0.015 % FS / °C max.						
Temperature compensation Span					≤ ± 0.008 % FS / °C typ. ≤ ± 0.015 % FS / °C max.						
Non-linearity at max. setting acc. to DIN 16086 terminal based					≤ ± 0.3 % FS max.						
Hysteresis					≤ ± 0.1 % FS max.						
Repeatability					≤ ± 0.05 % FS						
Rise time					≤ 1 ms						
Long-term drift					≤ ± 0.1 % FS typ. / year						
Environmental conditions											
Compensated temperature range					-25 .. +85 °C						
Operating temperature range [1)]					-40 .. +85 °C / -25 .. +85 °C						
Storage temperature range					-40 .. +100 °C						
Fluid temperature range [1)]					-40 .. +100 °C / -25 .. +100 °C						
CE mark					EN 61000-6-1 / 2 / 3 / 4						
Vibration resistance acc. to DIN EN 60068-2-6 at 10 .. 500 Hz					≤ 20 g						
Shock resistance acc. to DIN EN 60068-2-27					≤ 100 g / 6 ms						
Protection class acc. to DIN EN 60529 [2)]					IP 67						
Other data											
Voltage supply					Via HYDAC measuring instruments HMG 5X0, HMG 2500, HMG 4000 or CMU 1000						
Life expectancy					> 10 million cycles (0 .. 100 % FS)						
Weight					~ 150 g						

Note: Reverse polarity protection of the supply voltage, overvoltage, override and short circuit protection are provided.
FS (**F**ull **S**cale) = relative to complete measuring range
B.F.S.L. = **B**est **F**it **S**traight **L**ine

[1)] -25 °C with FKM seal, -40 °C on request
[2)] With mounted mating connector in corresponding protection class

Dimensions:

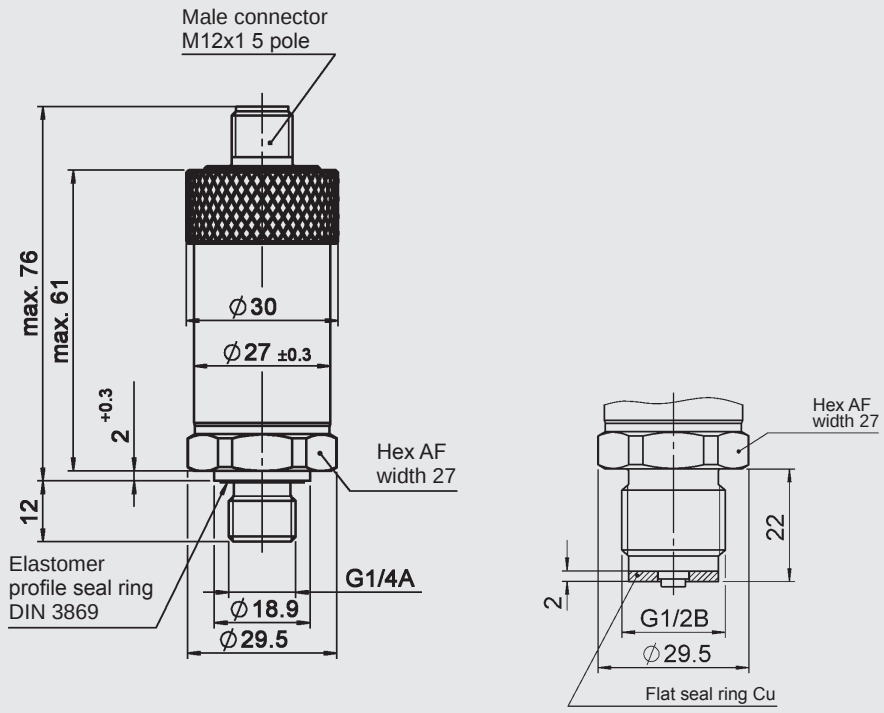

Model code:

HDA 4 7 X 8 – H – XXXX – 000

Mechanical connection
1 = G1/2 B DIN EN 837
(only for pressure ranges "1600; 2000 bar")
4 = G1/4 A ISO 1179-2

Electrical connection
8 = male M12x1, 5 pole
(mating connector not supplied)

Output signal
H = HSI (automatic sensor recognition)

Measuring ranges in bar
0009; 0016; 0060; 0100; 0250; 0400; 0600, 1000
1600, 2000 (only in conjunction with mech. connection "1")

Modification number
000 = standard

Accessories:
Appropriate accessories, such as mating connectors, can be found in the Accessories brochure.

Note:

The information in this brochure relates to the operating conditions and applications described.

For applications or operating conditions not described, please contact the relevant technical department.

Subject to technical modifications.

HYDAC ELECTRONIC GMBH
Hauptstr. 27, 66128 Saarbrücken
Germany
Telephone +49 (0)6897 509-01
Fax +49 (0)6897 509-1726
e-mail: electronic@hydac.com
Internet: www.hydac.com

Temperature Transmitter ETS 4100-H

Integrated temperature probe | **Accuracy 0.4 %**

With HSI sensor recognition

Description:

The electronic temperature transmitter ETS 4100-H with HSI sensor recognition has been specially developed for use in conjunction with HYDAC measuring instruments HMG 5X0, HMG 2500, HMG 4000 and CMU 1000.

For data transmission, the ETS 4100-H has an HSI interface (**H**YDAC **S**ensor **I**nterface).

The HSI sensors are automatically recognised via the HSI interface by the above-mentioned HYDAC measuring instruments and all necessary basic device settings are taken from each sensor.

Like all temperature transmitters of the ETS 4000 series, the ETS 4100-H features a robust design and excellent EMC properties. Based on corresponding evaluation electronics, the temperature sensor is designed to measure temperatures in the range -25 °C .. +100 °C.

Technical data:

Input data	
Measuring range	-25 .. +100 °C
Probe length	6 mm
Probe diameter	4.5 mm
Pressure resistance	600 bar
Overload pressure	900 bar
Mechanical connection	G¼ A ISO 1179-2
Tightening torque, recommended	20 Nm
Parts in contact with fluid [1]	Mech. connection: Stainless steel Seal: FKM
Output data	
Output signal	**HSI** (**H**YDAC **S**ensor **I**nterface) Automatic sensor recognition
Accuracy (at room temperature)	≤ ± 0.4 % FS typ. ≤ ± 0.8 % FS max.
Temperature drift (environment)	≤ ± 0.01 % FS / °C
Response time acc. to DIN EN 60751	t_{50}: ~ 4 s t_{90}: ~ 8 s
Environmental conditions	
Operating temperature range [2]	-40 .. +85 °C / -25 .. +85 °C
Storage temperature range	-40 .. +100 °C
Fluid temperature range [2]	-40 .. +125 °C / -25 .. +125 °C
CE mark	EN 61000-6-1 / 2 / 3 / 4
Vibration resistance acc. to DIN EN 60068-2-6 at 10 .. 500 Hz	≤ 20 g
Shock resistance acc. to DIN EN 60068-2-27	≤ 20 g
Protection class acc. to DIN EN 60529 [3]	IP 67
Other data	
Voltage supply	Via HYDAC measuring instruments HMG 5X0, HMG 2500, HMG 4000 or CMU 1000
Weight	~ 150 g

Note: Reverse polarity protection of the supply voltage, overvoltage, override and short circuit protection are provided.
FS (**F**ull **S**cale) = relative to complete measuring range

[1] Other seal materials on request
[2] -25 °C with FKM seal, -40 °C on request
[3] With mounted mating connector in corresponding protection class

Dimensions:

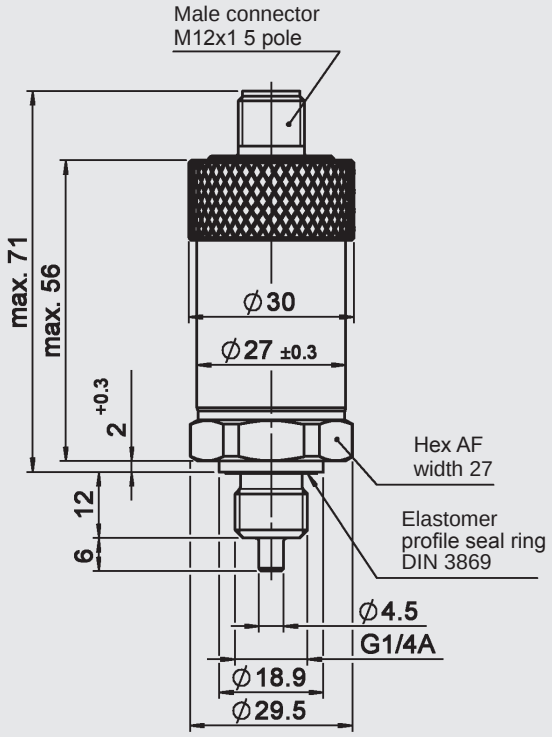

Model code:

ETS 4 1 4 8 – H – 006 – 000

Mechanical connection
4 = G1/4 A ISO 1179-2

Electrical connection
8 = male M12x1, 5 pole
(mating connector not supplied)

Output signal
H = HSI (automatic sensor recognition)

Probe length
006 = 6 mm

Modification number
000 = standard

Accessories:
Appropriate accessories, such as mating connectors, can be found in the Accessories brochure.

Note:

The information in this brochure relates to the operating conditions and applications described.

For applications or operating conditions not described, please contact the relevant technical department.

Subject to technical modifications.

HYDAC ELECTRONIC GMBH
Hauptstr. 27, 66128 Saarbrücken
Germany
Telephone +49 (0)6897 509-01
Fax +49 (0)6897 509-1726
e-mail: electronic@hydac.com
Internet: www.hydac.com

Flow Rate Transmitter EVS 3100-H / EVS 3110-H

Turbine | **Accuracy 2 %**

With HSI sensor recognition

Description:

The flow rate transmitters of the EVS 3100-H and EVS 3110-H series with HSI sensor recognition were specially developed for use in conjunction with the HYDAC measuring instruments HMG 5x0, HMG 2500, HMG 4000 and CMU 1000.

For data transmission, the EVS 31x0-H has an HSI interface (**H**YDAC **S**ensor **I**nterface).

The HSI sensors are recognised automatically via the HSI interface by the above-mentioned HYDAC measuring instruments, and all the necessary basic settings are taken from each instrument.

As is the case with all flow rate measurement transmitters of the EVS 3100 and EVS 3110 series, the EVS 31x0-H also operates in accordance with the turbine principle. The speed of an impeller turning in the fluid flow is measured and converted into an electronic signal.

Technical data:

Input data		
Measuring ranges [1] and operating pressure		
EVS 3108-H-0020 EVS 3118-H-0020	1.2 .. 20.0 l/min	400 bar
EVS 3108-H-0060 EVS 3118-H-0060	6.0 .. 60.0 l/min	400 bar
EVS 3108-H-0300 EVS 3118-H-0300	15.0 .. 300.0 l/min	400 bar
EVS 3108-H-0600	40.0 .. 600.0 l/min	315 bar
EVS 3118-H-0600	40.0 .. 600.0 l/min	400 bar
Additional connection options	2 x G1/4 female threads for pressure and/or temperature sensors	
Housing material	EVS 3100-H: aluminium EVS 3110-H: stainless steel	
Output data		
Output signal	**HSI** (**H**YDAC **S**ensor **I**nterface) Automatic sensor recognition	
Accuracy	≤ 2 % of the actual value	
Environmental conditions		
Compensated temperature range	-20 .. +70 °C	
Operating temperature range	-20 .. +70 °C	
Storage temperature range	-40 .. +100 °C	
Fluid temperature range	-20 .. +90 °C	
CE mark	EN 61000-6-1 / 2 / 3 / 4	
Protection class acc. to DIN EN 60529 [2]	IP 67	
Other data		
Measuring medium [3]	EVS 3100-H: hydraulic oils EVS 3110-H: water-based media	
Viscosity range	1 .. 100 cSt	
Calibration viscosity	EVS 3100-H: 30 cSt EVS 3110-H: 5 cSt	
Supply voltage	Via HYDAC measuring instruments HMG 5x0, HMG 2500, HMG 4000 or CMU 1000	

Note:
[1] Other measuring ranges on request
[2] With mounted mating connector in corresponding protection class
[3] Other measuring media on request

Dimensions:

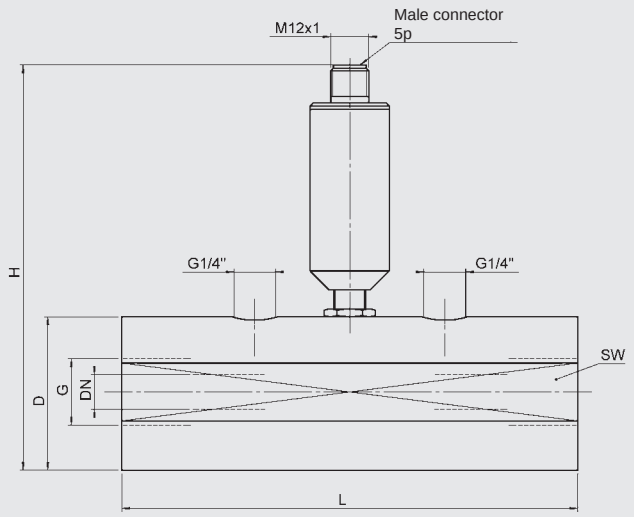

Model	Meas. range [l/min]	L [mm]	H [mm]	D / SW [mm]	G [mm]	Torque value recommended [Nm]	DN [mm]
EVS 3108-H-0020	1.2 .. 20	117	135	47 / 46	G¼"	60	7
EVS 3108-H-0060	6 .. 60	144	135	48.5 / 46	G½"	130	11
EVS 3108-H-0300	15 .. 300	155	150	63.5 / 60	G1¼"	500	22
EVS 3108-H-0600	40 .. 600	181	150	63.5 / 60	G1½"	600	30
EVS 3118-H-0020	1.2 .. 20	117	135	47 / 46	G¼"	60	7
EVS 3118-H-0060	6 .. 60	144	135	48.5 / 46	G½"	130	11
EVS 3118-H-0300	15 .. 300	155	150	63.5 / 60	G1¼"	500	22
EVS 3118-H-0600	40 .. 600	181	150	63.5 / 60	G1½"	600	30

Model code:

EVS 3 1 X 8 – H – XXXX – 000

Housing material
0 = aluminium
1 = stainless steel

Electrical connection
8 = male M12x1, 5 pole
(mating connector not supplied)

Output signal
H = HSI (automatic sensor recognition)

Measuring range
0020 = 1.2 .. 20 l/min
0060 = 6.0 .. 60 l/min
0300 = 15.0 .. 300 l/min
0600 = 40.0 .. 600 l/min

Modification number
000 = standard

Accessories:
Appropriate accessories, such as mating connectors, can be found in the Accessories brochure.

Note:

The information in this brochure relates to the operating conditions and applications described.

For applications or operating conditions not described, please contact the relevant technical department.

Subject to technical modifications.

HYDAC ELECTRONIC GMBH
Hauptstr. 27, 66128 Saarbrücken
Germany
Telephone +49 (0)6897 509-01
Fax +49 (0)6897 509-1726
e-mail: electronic@hydac.com
Internet: www.hydac.com

Pressure Transmitter HDA 4700-HC (for HMG 4000)

Relative pressure | **Accuracy 0.25 %**

With HCSI sensor recognition

Description:

To extend the number of sensors on the HMG 4000, the special CAN-based HCSI sensors were developed.

The HCSI sensors, easily identified by their red type label, are automatically recognised along with all their characteristics by the HMG 4000.

Up to 28 HCSI sensors can be connected to the HMG 4000 via the Y-distributor (available as an accessory) to set up an HMG-internal bus system. The data are transmitted using CAN-based bus protocol.

Like all pressure transmitters of the HDA 4700 series, the HDA 4700-HC also has a very accurate and robust sensor cell with a thin-film strain gauge on a stainless steel membrane.

Due to their outstanding temperature and EMC characteristics, together with their compact dimensions, these instruments can be used in a wide field of applications in the mobile and industrial sectors.

Technical data:

Input data											
Measuring ranges [1]	bar	-1 .. 9	16	60	100	250	400	600	1000	1600	2000
Overload pressures	bar	20	32	120	200	500	800	1000	1600	2400	3000
Burst pressure	bar	100	200	300	500	1000	2000	2000	3000	3000	4000
Mechanical connection					G1/4 A ISO 1179-2 G1/2 B DIN EN 837						
Tightening torque, recommended					20 Nm (G1/4); 40 Nm (G1/2)						
Parts in contact with fluid					Mech. connection: Stainless steel Seal: FKM						
Output data											
Output signal					**HCSI** (**H**YDAC **C**AN **S**ensor **I**nterface) Automatic sensor recognition						
Accuracy acc. to DIN 16086, terminal based					≤ ± 0.25 % FS typ. ≤ ± 0.5 % FS max.						
Accuracy, B.F.S.L.					≤ ± 0.15 % FS typ. ≤ ± 0.25 % FS max.						
Temperature compensation Zero point					≤ ± 0.008 % FS / °C typ. ≤ ± 0.015 % FS / °C max.						
Temperature compensation Span					≤ ± 0.008 % FS / °C typ. ≤ ± 0.015 % FS / °C max.						
Non-linearity at max. setting acc. to DIN 16086 terminal based					≤ ± 0.3 % FS max.						
Hysteresis					≤ ± 0.1 % FS max.						
Repeatability					≤ ± 0.08 % FS						
Rise time					≤ 1 ms						
Long-term drift					≤ ± 0.1 % FS typ. / year						
Environmental conditions											
Compensated temperature range					-25 .. +85 °C						
Operating temperature range [1]					-40 .. +85 °C / -25 .. +85 °C						
Storage temperature range					-40 .. +100 °C						
Fluid temperature range [1]					-40 .. +100 °C / -25 .. +100 °C						
CE mark					EN 61000-6-1 / 2 / 3 / 4						
Vibration resistance acc. to DIN EN 60068-2-6 at 10 .. 500 Hz					≤ 20 g						
Shock resistance acc. to DIN EN 60068-2-27					≤ 100 g / 6 ms						
Protection class acc. to DIN EN 60529 [2]					IP 67						
Other data											
Voltage supply					Via HYDAC measuring instrument HMG 4000						
Life expectancy					> 10 million cycles (0 .. 100 % FS)						
Weight					~ 150 g						

Note: Reverse polarity protection of the supply voltage, overvoltage, override and short circuit protection are provided.
FS (**F**ull **S**cale) = relative to complete measuring range
B.F.S.L. = **B**est **F**it **S**traight **L**ine

[1] -25 °C with FKM seal, -40 °C on request
[2] With mounted mating connector in corresponding protection class

Dimensions:

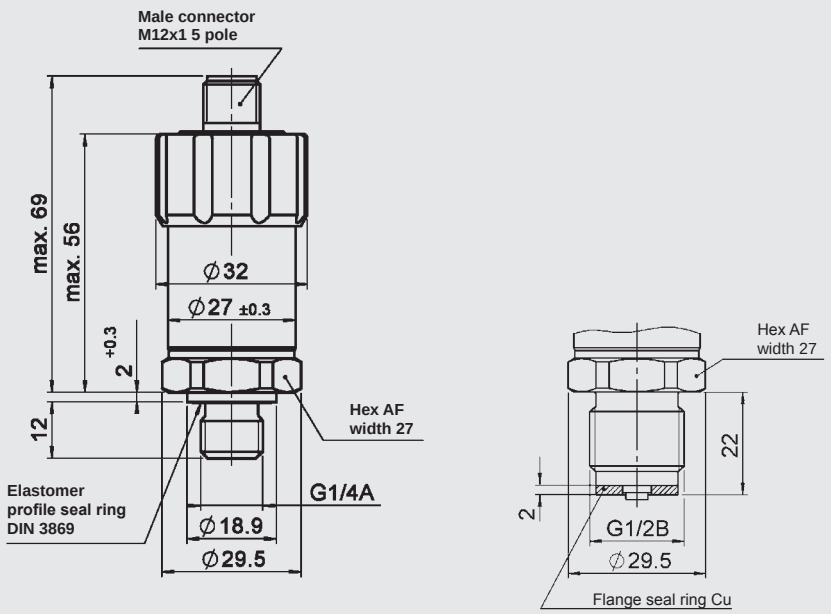

Model code:

HDA 4 7 X 8 – HC – XXXX – 000

Mechanical connection
1 = G1/2 B DIN EN 837
(only for pressure ranges "1600, 2000 bar")
4 = G1/4 A ISO 1179-2

Electrical connection
8 = male M12x1, 5 pole
(mating connector not supplied)

Output signal
HC = HCSI (**H**YDAC **C**AN **S**ensor **I**nterface)

Measuring ranges in bar
0009 (-1 .. +9); 0016; 0060; 0100; 0250; 0400; 0600, 1000
1600, 2000 (only in conjunction with mech. connection "1")

Modification number
000 = Standard

Accessories:

HCSI Y-distributor	Part no.: 6178196
HCSI bus termination	Part no.: 6178198

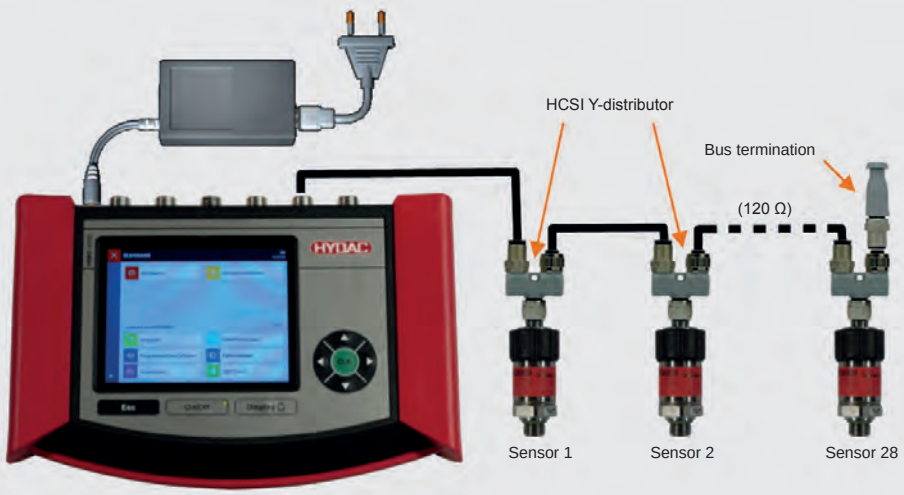

Note:

The information in this brochure relates to the operating conditions and applications described.

For applications or operating conditions not described, please contact the relevant technical department.

Subject to technical modifications.

HYDAC ELECTRONIC GMBH
Hauptstr. 27, 66128 Saarbrücken
Germany
Telephone +49 (0)6897 509-01
Fax +49 (0)6897 509-1726
e-mail: electronic@hydac.com
Internet: www.hydac.com

Temperature Transmitter ETS 4100-HC (for HMG 4000)

Integrated temperature probe | **Accuracy 0.4 %**

With HCSI sensor recognition

Description:

To extend the number of sensors on the HMG 4000, the special CAN-based HCSI sensors were developed.

The HCSI sensors, easily identified by their red type label, are automatically recognised along with all their characteristics by the HMG 4000.

Up to 28 HCSI sensors can be connected to the HMG 4000 via the Y-distributor (available as an accessory) to set up an HMG-internal bus system. The data are transmitted using CAN-based bus protocol.

Like all temperature transmitters of the ETS 4000 series, the ETS 4100-HC features a robust design and excellent EMC properties. The temperature sensor is designed to measure temperatures in the range -25 °C .. +100 °C.

Due to their compact dimensions, these instruments can be used in a wide field of applications in the mobile and industrial sectors.

Technical data:

Input data	
Measuring range	-25 .. +100 °C
Probe length	6 mm
Probe diameter	4.5 mm
Pressure resistance	600 bar
Mechanical connection	G¼ A ISO 1179-2
Tightening torque, recommended	20 Nm
Parts in contact with fluid [1]	Mech. connection: Stainless steel Seal: FKM
Output data	
Output signal	**HCSI** (**H**YDAC **C**AN **S**ensor **I**nterface) Automatic sensor recognition
Accuracy (at room temperature)	≤ ± 0.4 % FS typ. ≤ ± 0.8 % FS max.
Temperature drift (environment)	≤ ± 0.01 % FS / °C
Response time acc. to DIN EN 60751	t_{50}: ~ 4 s t_{90}: ~ 8 s
Environmental conditions	
Operating temperature range [2]	-40 .. +85 °C / -25 .. +85 °C
Storage temperature range	-40 .. +100 °C
Fluid temperature range [2]	-40 .. +125 °C / -25 .. +125 °C
CE mark	EN 61000-6-1 / 2 / 3 / 4
Vibration resistance acc. to DIN EN 60068-2-6 at 10 .. 500 Hz	≤ 20 g
Shock resistance acc. to DIN EN 60068-2-27	≤ 20 g
Protection class acc. to DIN EN 60529 [3]	IP 67
Other data	
Voltage supply	Via HYDAC measuring instrument HMG 4000
Weight	~ 150 g

Note: Reverse polarity protection of the supply voltage, overvoltage, override and short circuit protection are provided.
FS (**F**ull **S**cale) = relative to complete measuring range

[1] Other seal materials on request
[2] -25 °C with FKM seal, -40 °C on request
[3] With mounted mating connector in corresponding protection class

Dimensions:

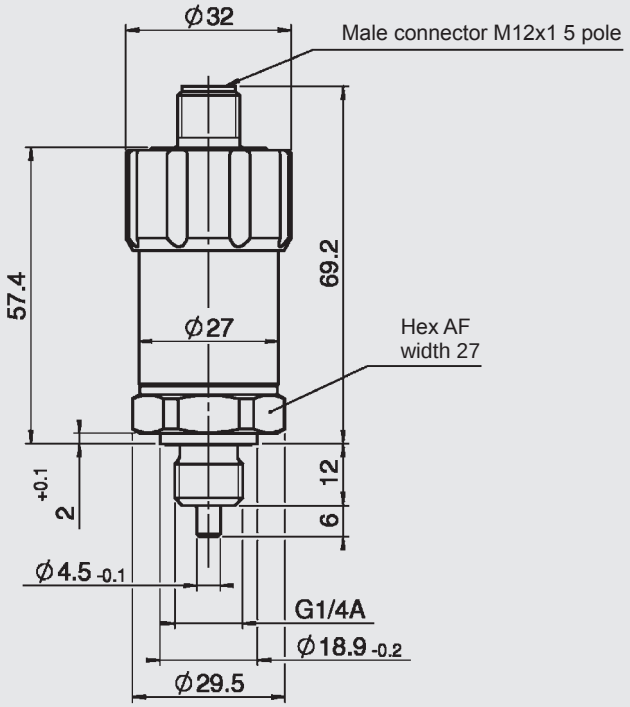

Model code:

ETS 4 1 4 8 – HC – 006 – 000

Mechanical connection
4 = G1/4 A ISO 1179-2

Electrical connection
8 = male M12x1, 5 pole
(mating connector not supplied)

Output signal
HC = HCSI (**H**YDAC **C**AN **S**ensor **I**nterface)

Probe length
006 = 6 mm

Modification number
000 = Standard

Accessories:

HCSI Y-distributor Part no.: 6178196
HCSI bus termination (120 Ω) Part no.: 6178198

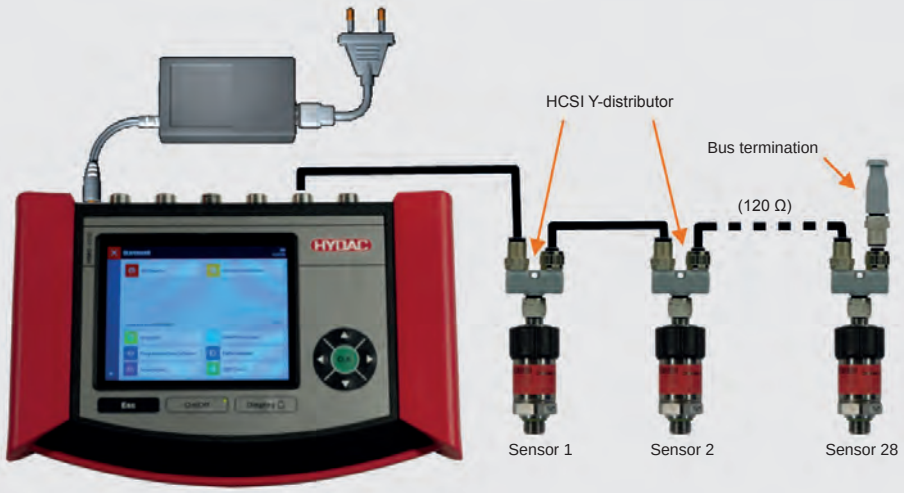

Note:

The information in this brochure relates to the operating conditions and applications described.

For applications or operating conditions not described, please contact the relevant technical department.

Subject to technical modifications.

HYDAC ELECTRONIC GMBH
Hauptstr. 27, 66128 Saarbrücken
Germany
Telephone +49 (0)6897 509-01
Fax +49 (0)6897 509-1726
e-mail: electronic@hydac.com
Internet: www.hydac.com

Further accessories for HMG 500 / 510 / 2500 and 4000

Case
for HMG 2500/4000 and accessories
Part no.: 6179836

Plastic case
for HMG 500/510 and accessories
Part no.: 6043006

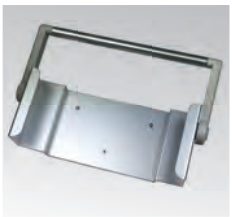

Magnetic holder
for HMG 4000
Handle can be rotated 360°, three magnets on back with approx. 80 N holding force
Part no.: 4227226

Bag with carrying strap
for HMG 2500/30X0
Part no.: 909795

Power supply unit
for HMG 2500/30X0/4000
Part no.: 6054296

Power supply unit
for HMG 500/510
Part no.: 6043562

ZBE 31
Car charger for HMG 2500/30X0/4000
Part no.: 909739

UVM 3000
Connection adapter for HMG 30X0/4000 for connecting third-party sensors
Part no.: 909752

ZBE I1-000
Current measurement adapter for galvanically isolated current measurement up to ±4 A for connection to HMG 5x0/2500/30x0/4000.
Part no.: 926543

ZBE 26
Y-adapter (blue) for connecting a HYDACLAB® HLB 1400
Part no.: 3304374

ZBE 38
Y-adapter (black) for HMG 4000 for the digital input socket
Part no.: 3224436

ZBE 41
Y-adapter (yellow) for HMG 2500/30X0/4000 for connecting a ContaminationSensor CS 1000
Part no.: 910000

ZBE 46
Pin adapter for HMG 2500/30X0/4000 for 3-conductor signals and AquaSensor AS 1000
Part no.: 925725

ZBE 100
Connection adapter for HMG 4000 for temperature probe TFP 100
Part no.: 925726

HCSI Y-distributor
Adapter for HMG 4000 for connecting HCSI sensors
Part no.: 6178196

HCSI bus termination
Termination resistor for HCSI bus line (120 Ω)
Part no.: 6178198

ZBE 30-02 (5 pole)
Connection cable, 2 m length, male/female M12x1, screw connection
Part no.: 6040851

ZBE 30-05 (5 pole)
Connection cable, 5 m length, male/female M12x1, screw connection
Part no.: 6040852

ZBE 40-02 (5 pole)
Connection cable, 2 m length, male/female M12x1,
push-pull connection on male side,
screw connection on female side
Part no.: 6177158

ZBE 40-05 (5 pole)
Connection cable, 5 m length, male/female M12x1,
push-pull connection on male side,
screw connection on female side
Part no.: 6177159

ZBE 40-10 (5 pole)
Connection cable, 10 m length, male/female M12x1,
push-pull connection on male side,
screw connection on female side
Part no.: 6177160

HDS 1000 RPM probe
for HMG 2500/30X0/4000 including reflective foil set
Part no.: 909436

HDS 1000 reflective foil set
Spare Part, Quantity: 25
Part no.: 904812

SSH 1000
Sensor simulator for HMG 2500/30X0/4000 to simulate 2 HSI sensors, ideal for training purposes
Part no.: 909414

USB cable (HMG 2X/3X/4X)
(1x plug A - 1x plug B)
Part no.: 6040585

USB cable (HMG 500)
(1x plug A - Mini USB)
Part no.: 6049553

Carrying strap for HMG 4000

Part no.: 4070365

Rechargeable battery pack for HMG 4000

Part no.: 3956715

Hydraulic adapter kit
for HMG, 2 pcs. each of
- Adapter hose DN 2-1620/1620 (400 mm and 1000 mm)
- Pressure gauge connection 1620/G1/4
- Bulkhead coupling 1620/1620

Part no.: 903083

Note:

The information in this brochure relates to the operating conditions and applications described.

For applications or operating conditions not described, please contact the relevant technical department.

Subject to technical modifications.

HYDAC ELECTRONIC GMBH
Hauptstr. 27, 66128 Saarbrücken
Germany
Telephone +49 (0)6897 509-01
Fax +49 (0)6897 509-1726
e-mail: electronic@hydac.com
Internet: www.hydac.com

Programming Devices
Programming Adapters

The programming of sensors directly at the system, quick 1:1 replacement of sensors, sensor data transmission from one device to another – these are today's fundamental requirements in order to ensure optimised processes and high machine availability.

For HYDAC's own programmable pressure switches and IO-Link sensors, HYDAC offers a variety of programming devices and programming adapters, ideally suited to satisfy the customer's requirements.

Device-specific	Programming devices		Programming adapter *)
	HPG 3000	HPG P1	ZBE P1
EDS 4000	✔		✔
EDS 4000 Ex ia, with ATEX approval	✔		✔
EDS 4000 Exd, with ATEX, CSA, IECEx approval	✔		✔
EDS 820 IO-Link		✔	✔
EDS 3000 IO-Link		✔	✔
ETS 3000 IO-Link		✔	✔
ENS 3000 IO-Link		✔	✔
HNS 3000 IO-Link		✔	✔

*) in conjunction with a PC and the HYDAC software ZBE P1-WIN, which is delivered with the device.

Note: With the portable data recorder HMG 4000, it is also possible to parameterise the IO-Link products.

Programming device HPG 3000:

Device designed for the adaptation of the HYDAC programmable pressure switches EDS 4000 series to the relevant application, even directly at the plant.

Technical Data

Supply voltage	18 .. 32 V DC
Current consumption	≤ 35 mA + sensor
Ambient temperature range	-25 .. + 80 °C
Storage temperature range	-40 .. 80 °C
CE mark	EN 61000-6-1 / 2 / 3 / 4
Power supply connection (power supply via the respective sensor supply or via HMG 4000 / ZBE P1)	Male M12x1, 4 pole
Display	4-digit, LED, 7 segment, red, height of digits 7 mm
Weight	~ 120 g

Order details:

HPG 3000-000 **Part no.: 909422**

Programming device HPG P1:

Designed for the programming of HYDAC IO-Link sensors directly at the plant.

Allows sensor settings to be copied and transmitted easily from one device to another.

If direct programming of the sensor at the plant is not necessarily required, parameter sets can also be transmitted from the HPG P1 to a HYDAC portable data recorder HMG 4000, or to a PC (via the HYDAC programming adapter ZBE P1) and imported again after processing.

Technical data:

Supply voltage	18 .. 32 V DC
Current consumption	≤ 35 mA + sensor
Ambient temperature range	-25 .. + 80 °C
Storage temperature range	-40 .. 80 °C
CE mark	EN 61000-6-1 / 2 / 3 / 4
Power supply connection (power supply via the respective sensor supply or via HMG 4000 / ZBE P1)	Male M12x1, 4 pole
Display	4-digit, LED, 7 segment, red, height of digits 7 mm
Weight	~ 120 g

Order details:

HPG P1-000 **Part no.: 925316**

Programming adapter ZBE P1:

Designed for the programming of HYDAC ELECTRONIC programmable pressure switches and IO-Link sensors in conjunction with a PC and the HYDAC software ZBE P1-WIN which is delivered with the device.

Technical data:

External supply voltage	24 V DC
Current consumption	≤ 35 mA + sensor
Residual ripple	≤ 5 %
Current consumption at USB	Max. 500 mA (with sensor)
Storage temperature range	- 40 .. 80 °C
CE mark	EN 61000-6-1 / 2 / 3 / 4
Power supply connection	USB connection to PC or M12x1 for integration into the system concept or external power supply unit
Display	3 LEDs (USB status / status of supply voltage of unit to be programmed / status of communication)
Weight	~ 170 g

Order details:

ZBE P1-000 **Part no.: 923695**

Supplied with the instrument: one connection cable ZBE 30-02 (M12x1, 5 pole, 2 m, part no. 6040851), one USB cable (part no. 6040585) and the software ZBE P1-WIN.

Note:

The information in this brochure relates to the operating conditions and applications described.

For applications or operating conditions not described, please contact the relevant technical department.

Subject to technical modifications.

HYDAC ELECTRONIC GMBH
Hauptstr. 27, 66128 Saarbrücken
Germany
Telephone +49 (0)6897 509-01
Fax +49 (0)6897 509-1726
e-mail: electronic@hydac.com
Internet: www.hydac.com

Notes:

Notes:

Notes:

Notes:

Notes:

Notes:

A

AUSTRIA
(Slovenia, Croatia, Bosnia-Herzegovina, Serbia and Montenegro, Macedonia)
HYDAC Hydraulik Ges.m.b.H.
Industriestr. 3
4066 Pasching
Tel.: +43 7229 / 6 18 11-0
Fax: +43 7229 / 6 18 11-35
E-mail: vt_a@hydac.com

AUS

AUSTRALIA
HYDAC PTY. LTD.
109 Dohertys Road
Altona North, VIC 3025
Postal address:
P.O. Box 224
Altona North, VIC 3025
Tel.: +61 3 / 92 72 89 00
Fax: +61 3 / 98 360 80 70
E-mail: info@hydac.com.au
Internet: hydac.com.au

B

BELGIUM
HYDAC A.S./N.V.
Overhaemlaan 33
3700 Tongeren
Tel.: +32 12 / 26 04 00
Fax: +32 12 / 26 04 09

BG

BULGARIA
HYDAC EOOD
ZK Druzhba 1
Amsterdam 9
1592 Sofia
Tel.: +359 2 / 9706060
Fax: +359 2 / 9706075
E-mail: office@hydac.bg
Internet: www.hydac.bg

BLR

BELARUS
HYDAC Belarus
ul. Timirjazeva 65a, Biura 504-505
220035 Minsk
Tel.: +375 17 209 01 32
Fax: +375 17 209 01 35
E-Mail: info@hydac.com.by
Internet: www.hydac.com.by

BR

BRAZIL
HYDAC Technologia Ltda.
Estrada Fukutaro Yida, 225
Bairro Cooperativa, 09852-060
Sao Bernardo do Campo
São Paulo
Tel.: +55 11 / 43 93 66 00
Fax: +55 11 / 43 93 66 17
E-mail: hydac@hydac.com.br
Internet: www.hydac.com.br

CDN

CANADA
HYDAC Corporation
14 Federal Road
Welland, Ontario
L3B 3P2
Tel.: +1 905 / 714 93 22
Fax: +1 905 / 714 46 64
E-mail: sales@hydac.ca
Internet: www.hydac.ca

CH

SWITZERLAND
HYDAC Engineering AG
Allmendstr. 11
6312 Steinhausen / Zug
Tel.: +41 41 / 747 03 21
Fax: +41 41 / 747 03 29
E-mail: hydac-engineering-AG@hydac.com
Internet: www.hydac.ch

HYDAC S.A.
Zona Industriale 3, Via Sceresa
6805 Mezzovico
Tel.: +41 91 / 935 57 00
Fax: +41 91 / 935 57 01
E-mail: info.coolingsystems@hydac.ch
Internet: www.hydac.ch

CZ

CZECH REPUBLIC
HYDAC spol. S.R.O.
Kanadská 794
391 11 Planá nad Luznici
Tel.: +420 381 / 20 17 11
Fax: +420 381 / 29 12 70
E-mail: hydac@hydac.cz
Internet: www.hydac.cz

D

GERMANY
HYDAC-Büro Berlin
IBH Ingenieurbüro und
Handelsvertretung Hammer GmbH
Kaiser-Wilhelm-Str. 17
12247 Berlin
Tel.: +49 (0)30 / 772 80 50
Fax: +49 (0)30 / 773 80 80

HYDAC-Büro Südost
Wiesestr. 189
07551 Gera
Tel.: +49 (0)365 / 73 97 5320
Fax: +49 (0)365 / 73 97 5310

HYDAC-Büro Nordost
Zum Kiesberg 16
14979 Großbeeren
Tel.: +49 (0)33701 / 3389-0
Fax: +49 (0)33701 / 3389-4499

HYDAC-Büro Bremen
Riedemannstr. 1
27572 Bremerhaven
Tel.: +49 (0)471 / 700572-4200
Fax: +49 (0)471 / 700572-4242

HYDAC-Büro Hamburg
Mühlenweg 131-139
22844 Norderstedt
Tel.: +49 (0)40 / 52 60 07-0
Fax: +49 (0)40 / 52 60 07-15

HYDAC-Büro Nord
Oldenburger Allee 41
30659 Hannover
Tel.: +49 (0)511 / 56 35 35-0
Fax: +49 (0)511 / 56 35 35-56

HYDAC-Büro West
Münchener Str. 61
45145 Essen
Tel.: +49 (0)201 / 320 89 51-00
Fax: +49 (0)201 / 320 89 52-22

HYDAC-Büro Mitte
Dieselstr. 9
64293 Darmstadt
Tel.: +49 (0)6151 / 81 45-0
Fax: +49 (0)6151 / 81 45-22

HYDAC-Büro Südwest
Rehgrabenstr. 3
66125 Saarbrücken-Dudweiler
Tel.: +49 (0)6897 / 509-01
Fax: +49 (0)6897 / 509-1422

HYDAC-Büro Süd
Dieselstr. 30
71546 Aspach
Tel.: +49 (0)7191 / 34 51-0
Fax: +49 (0)7191 / 34 51-4033

HYDAC-Büro München
Am Anger 8
82237 Wörthsee / Etterschlag
Tel.: +49 (0)8153 / 987 48-0
Fax: +49 (0)8153 / 987 48-4822

HYDAC-Büro Nürnberg
Reichswaldstr. 52
90571 Schwaig
Tel.: +49 (0)911 / 24 46 43-0
Fax: +49 (0)911 / 24 46 43-4260

DK

DENMARK
HYDAC A/S
Havretoften 5
5550 Langeskov
Tel.: +45 70 27 02 99
Fax: +45 63 13 25 40
E-mail: hydac@hydac.dk

E

SPAIN
HYDAC Technology SL
C/ Solsones
54 – Pol. Ind. Pla de la Bruguera
08211 Castellar del Valles
Tel.: +34 93 / 747 36 09
Fax: +34 93 / 715 95 42
E-mail: a.masoliver@hydac.es

ET

EGYPT
Yasser Fahmy Hydraulic Eng.
65-66-68 Saudi Building, Kobba
P.O. Box 6550 Sawah 11813
Cairo
Tel.: +202 (2) / 4520192, 4530922
Fax: +202 (2) / 4530638
E-mail: yasserf@yf-hydraulic.com.eg

F

FRANCE
HYDAC S.à.r.l.
Technopôle Forbach Sud
B.P. 30260
57604 Forbach Cedex
Tel.: +33 3 / 87 29 26 00
Fax: +33 3 / 87 85 90 81
E-mail: hydac_france@hydac.com

Agence de **Paris**
Tel.: +33 1 / 60 13 97 26

Agence de **Lyon**
Tel.: +33 4 / 78 87 83 02

Agence de **Bordeaux**
Tel.: +33 5 / 57 54 25 25

Agence de **Martigues**
Tel.: +33 4 / 42 49 61 35

Agence **Centre-Est**
Tel.: +33 3 / 81 63 01 65

FI

FINLAND
(Estonia)
HYDAC OY
Kisällintie 5
01730 Vantaa
Tel.: +358 10 773 7100
Fax: +358 10 773 7120
E-mail: hydac@hydac.fi
Internet: www.hydac.fi

GB

GREAT BRITAIN
HYDAC Technology Limited
De Havilland Way, Windrush Park
Witney, Oxfordshire
OX29 OYG
Tel.: +44 1993 86 63 66
Fax: +44 1993 86 63 65
E-mail: info@hydac.co.uk
Internet: www.hydac.co.uk

GR

GREECE
Delta-P Fluid Technologies S.A.
7, Grevenon Street
11855 Athens
Tel.: +30 210 341 0181
Fax: +30 210 341 0183
E-mail: delta_pi@otenet.gr

H

HUNGARY
HYDAC Hidraulika és Szüréstechnika Kft.
Ezred u. 16
1044 Budapest
Tel.: +36 1 359 93 59
Fax: +36 1 239 73 02
E-mail: hydac@hydac.hu
Internet: www.hydac.hu

HK

HONG KONG
HYDAC Technology (Hongkong) Ltd.
Room 602, 6/F, Silvercord Tower 1
30 Canton Road, Tsim Sha Tsui
Kowloon, Hong Kong
Tel.: +852 23 69 35 68
Fax: +852 23 69 35 67

I

ITALY
HYDAC S.p.A.
Via Archimede 76
20864 Agrate Brianza (MB)
Tel.: +39 039 / 64 22 11
Fax: +39 039 / 68 99 682
E-mail: hydac@hydac.it
Internet: www.hydac.it

IND

INDIA
HYDAC INDIA PVT. LTD.
A-58 TTC Industrial Area, MIDC, Mahape
Navi Mumbai 400 701
Tel.: +91 22 / 411 18-888
Fax: +91 22 / 2778 11 80
E-mail: k.venkat@hydacindia.com

J

JAPAN
HYDAC CO. LTD.
Daiwa Hatchobori Ekimae Bldg. 2F
3-25-7 Hatchobori, Chuo-ku
Tokyo 104-0032
Tel.: +81 3 / 35 37-3620
Fax: +81 3 / 35 37-3622

L

LUXEMBURG
Friederich-Hydropart S.à.r.l.
Route d'Esch, C.P. 38
3801 Schifflange
Tel.: +352 54 52 44
Fax: +352 54 52 48

MAL

MALAYSIA
HYDAC Technology Sdn. Bhd.
16, Jalan Pengacara U1 / 48
Temasya Industrial Park
40150 Shah Alam
Selangor Darul Ehsan
Tel.: +60 3 / 5567 0250, 0251, 0253
Fax: +60 3 / 5567 0252
E-mail: query@hydac.com.my

MEX

MEXICO
HYDAC International SA de CV
Calle Alfredo A. Nobel No. 35
Colonia Puente de Vigas
Tlalnepantla
Edo. De México, CP 54090
Tel.: +52 55 4777 1272 al 65
Fax: +52 55 5390 2334
Internet: www.hydacmex.com

N

NORWAY
HYDAC AS
Berghagan 4
1405 Langhus
Tel.: +47 64 85 86 00
Fax: +47 64 85 86 01
E-mail: firmapost@hydac.no

NL

NETHERLANDS
HYDAC B.V.
Vossenbeemd 109
5705 CL Helmond
Tel.: +31 (0)88 0597 001
Fax: +31 (0)88 0597 020
E-mail: info@hydac.nl

NZ

NEW ZEALAND
HYDAC LTD.
108A Penrose Road
Mount Wellington 1060
Auckland
Tel.: +64 9271 4120
Fax: +64 9271 4124
E-mail: info@hydac.co.nz
Internet: www.hydac.co.nz

P

PORTUGAL
HYDAC TECNOLOGIA, UNIPESSOAL, LDA.
Centro Empresarial do Castêlo da Maia
Rua Manuel Assunção falcão, 501
4475-041 Maia
Tel.: +351 223 160 364
Fax: +351 223 160 265
E-mail: info@hydac.pt
Internet: www.hydac.com

PL

POLAND
(Latvia, Lithuania)
HYDAC SP.Z O.O.
ul. Reymonta 17
43-190 Mikołow
Tel.: +48 32 / 226 26 55, 326 01 10
Fax: +48 32 / 226 40 42
E-mail: info@hydac.com.pl
Internet: www.hydac.com.pl

PRC

CHINA
HYDAC Technology (Shanghai) Ltd.
28 Zhongpin Lu
Shanghai Minhang Economic &
Technological Development Zone
Shanghai 200245
Tel.: +86 21 / 64 63 35 10
Fax: +86 21 / 64 30 02 57
E-mail: hydacsh@hydac.com.cn

RUS

RUSSIA
HYDAC International
ul. 4, Magistralnaja 5, office 31
123007 Moscow
Tel.: +7 495 / 980 80 01
Fax: +7 495 / 980 70 20
E-mail: info@hydac.com.ru
Internet: www.hydac.com.ru

Technical Office St. Petersburg
Nab. Obwodnogo kanala 138
190020 St. Petersburg
Tel.: +7 812 / 495 9462
Fax: +7 812 / 495 9463
E-mail: petersb@hydac.com.ru

Technical Office Novokuznetsk
ul. Niewskogo 1, office 300
654079 Novokuznetsk
Tel.: +7 3843 99 1346
Fax: +7 3843 99 1345
E-mail: novokuz@hydac.com.ru

Technical Office Ulyanovsk
ul. Efremova 29, office 418
432042 Ulyanovsk
Tel.: +7 8422 61 3453
Fax: +7 8422 61 3452
E-mail: uljan@hydac.com.ru

RA

ARGENTINA
HYDAC Technology Argentina S.R.L.
Av. Belgrano 2729
(B1611DVG) Don Torcuato
Tigre / Buenos Aires
Tel.: +54 11 4727-1155 / -0770 / -2323
E-mail: argentina@hydac.com

RCH

CHILE
HYDAC Tecnologia Chile Ltda.
Las Araucarias 9080-9110 / módulo F
Parque Industrial Las Araucarias
8720041 Quilicura / Santiago
Tel.: +56 2 / 5 84 67 54
Fax: +56 2 / 5 84 67 55
E-mail: guillermo.viertel@hydac.com

RI

INDONESIA
PT HYDAC Technology Indonesia PMA
Komplek Pergudangan T8 No.27-29
Alam Sutera - Serpong
Tangerang Selatan 15325
Tel.: +62 21 2921 1671 / 2921 1672
Fax: +62 21 2921 1653
E-mail: info@hydac.co.id
Internet: www.hydac.co.id

ROK

KOREA
HYDAC Korea Co. Ltd.
6th floor Daewon Bldg.
175 Bangbae Jungang-ro, Seocho-gu
Seoul 137-829
Tel.: +82 2 / 591 09 31
Fax: +82 2 / 591 09 32
E-mail: johnkim@hydackorea.co.kr

ROM

ROMANIA
HYDAC SRL
12 Soseaua Vestului Street, Et 2
100298, Ploiesti, Prahova county
Prahova county
Tel.: +40 244 575 778
Fax: +40 244 575 779
E-mail: hydac@hydac.ro
Internet: www.hydac.ro

S

SWEDEN
HYDAC Fluidteknik AB
Domnarvsgatan 29
16353 Spånga
Tel.: +46 8 / 445 29 70
Fax: +46 8 / 445 29 90
E-mail: hydac@hydac.se
Internet: www.hydac.se

SGP

SINGAPORE
HYDAC Technology Pte Ltd.
2A Second Chin Bee Road
Singapore 618781
Tel.: +65 67 41 74 58
Fax: +65 67 41 04 34
E-mail: thomas.lek@hydac.com.sg
Internet: www.hydac.com.sg

SK

SLOVAKIA
HYDAC S.R.O.
Gorkého 4
036 01 Martin
Tel.: +421 43 / 413 58 93, 423 73 94, 422 08 75
Fax: +421 43 / 422 08 74
E-mail: hydac@hydac.sk
Internet: www.hydac.sk

SL

SLOVENIA
HYDAC d.o.o.
Tržaška Cesta 39
2000 Maribor
Tel.: +386 2 / 460 15 20
Fax: +386 2 / 460 15 22
E-mail: info@hydac.si
Internet: www.hydac.si

T

THAILAND
AEROFLUID CO. LTD.
169/4, 169/5, Moo 1
Rangsit-Nakhonnayok Rd.
Patumthanee 12110
Tel.: +66 2 / 577 2999
Fax: +66 2 / 577 2700
E-mail: info@aerofluid.com

TR

TURKEY
HYDAC AKIŞKAN KONTROL
SİSTEMLERİ SAN. VE TİC. LTD. ŞTİ.
Namik Kemal Mahallesi
Adile Naşit Bulvan, 174 Sok. No. 9
34513 Esenyurt - Istanbul
Tel.: +90 212 / 428 25 25
Fax: +90 212 / 428 70 37
E-mail: info@hydac.com.tr
Internet: www.hydac.com.tr

TW

TAIWAN
HYDAC Technology Ltd.
No. 18, Shude 1st Lane, South District
Taichung City 40242
Tel.: +886 4 / 2260 2278
Fax: +886 4 / 2260 2352
E-mail: kc.chen@hydac.com.tw
Internet: www.hydac.com.tw

UKR

UKRAINE
HYDAC Kiew
ul. Novokonstantinovskaya 9
Korpus 13, 2 Etage
04080 Kiev
Tel.: +38 044 / 495 33 96, 495 33 97
Fax: +38 044 / 495 33 98
E-mail: info@hydac.com.ua
Internet: www.hydac.com.ua

USA

USA
HYDAC Technology Corporation
HYDAC Corp.
2260 & 2280 City Line Road
Bethlehem, PA 18017
Tel.: +1 610 / 266 01 00
Fax: +1 610 / 266 35 40
E-mail: sales@hydacusa.com
Internet: www.hydacusa.com

VN

VIETNAM
HYDAC International
E-Town Building, Mezzanine Floor
Executive office, Room 7
364 Cong Hoa Street, Tan Binh District
Ho Chi Minh City
Tel.: +84 88 120 545 Ext. 215
Fax: +84 88 120 546

ZA

SOUTH AFRICA
(Namibia, Zimbabwe)
HYDAC Technology Pty Ltd.
Postnet Suite 304, Private Bag X10020
Edenvale 1610, Johannesburg
Tel.: +27 11 / 723 90 80
Fax: +27 11 / 453 72 37
E-mail: hydacza@hydac.com

Accumulator Technology 30.000

Filter Technology 70.000

Process Technology 77.000

Filter Systems 79.000

Compact Hydraulics 53.000

Accessories 61.000

Electronics 180.000

Cooling Systems 57.000

Global Presence.
Local Expertise.
www.hydac.com

- HYDAC Headquarters
- HYDAC Companies
- HYDAC Sales and Service Partners

HYDAC INTERNATIONAL

HYDAC ELECTRONIC GMBH

Hauptstr. 27
66128 Saarbrücken
Germany

Tel.: +49 6897 509-01
Fax: +49 6897 509-1726

e-mail: electronic@hydac.com
Internet: www.hydac.com

EN 180.000.3/02.18