HYDAC INTERNATIONAL

Automatic back-flushing filter
AutoFilt® RF3

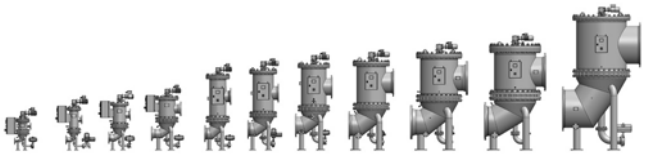

Specifications	
Nominal size:	DN 50 – DN 900
Q_{max}:	7,500 m³/h
p_{max}:	100 bar
Filtration ratings:	25 – 3000 µm

1. GENERAL

Product description
- Self-cleaning automatic filter
- Separation of solid particles from low viscosity fluids

Filter element technology
- Conical filter elements
- Wedge wire: 50 to 3000 µm
- SuperMesh wire mesh: 25 to 60 µm

Product advantages
- Automatic back-flushing reduces operating costs
- Isokinetic filtration and back-flushing provides greater efficiency
- Flow-optimised housing design
- No interruption of the filtrate flow during back-flushing
- Pulse-aided back-flushing
- Various control variants with individually adjustable control parameters
- Numerous material and equipment variants available
- Ready-to-operate unit
- Variable flange positions (inlet and outlet flange with back-flush line)

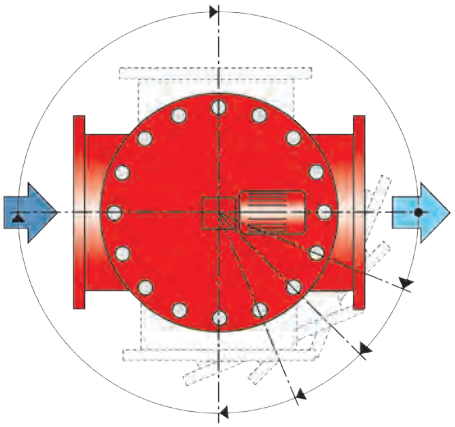

Technical data – standard models*

Size	Pressure rating [1] (bar)	Connection Inlet/outlet	Connection back-flush line (PN 16)	Weight [2] (kg)	Volume (l)	No. of filter elements	Filter area [3] (cm²)	Back-flush volume [4] (l)
C	16	DN 50	DN 25	121	15	6 x KC	2140	25
0	10 [1]	DN 100	DN 25	145	25	6 x K0	3810	25
1	10	DN 150	DN 40	240	60	3 x K1 3 x K2	6190	35
2	10	DN 200	DN 50	365	105	4 x K1 4 x K2	8250	50
2.5	10	DN 250	DN 50	450	190	6 x K3	12500	65
3	10	DN 300	DN 65	570	280	9 x K3	18750	95
4	6	DN 400	DN 80	750	425	18 x K3	37500	210
5	6	DN 500	DN 80	1020	635	16 x K3 8 x K4	55760	310
6	6	DN 600	DN 100	1610	998	32 x K3 8 x K4	89100	485
7	6	DN 700	DN 100	1950	1355	24 x K3 20 x K4	106100	555
8	6	DN 900	DN 150	3550	2710	54 x K5	180700	720

Legend

[1] Pressure rating for size 0 made of stainless steel is 16 bar (E1 = stainless steel 1.4301, 1.4541 or similar (group 304/321) / E2 = stainless steel 1.4571 or similar (group 316).
Housing design and housing production according to AD2000 and other design codes if necessary.

[2] Empty weight based on standard pressure rating.

[3] Only K3 filter elements are installed when using SuperMesh filter elements (KW / SKW). The number of filter elements remains unchanged. This results in the following filter areas:
RF3-5: 50000 cm²
RF3-6: 83333 cm²
RF3-7: 91667 cm²
RF3-8: 112500 cm²

[4] Per cycle, based on EPT/PTZ control mode with back-flushing valve opening time of 1.5 seconds and 1.5 bar differential pressure between outlet and back-flush line – with EU control, the back-flush volume increases.

* The standard operating temperature for AutoFilt® RF3 made of stainless steel (E1 / E2) is 90°C and 60°C for housings with an interior coating (NP / NM).

2. FUNCTION

FILTRATION

- The fluid to be filtered flows through the filter elements of the back-flushing filter, passing from the inside to the outside
- The particles collect on the smooth inner sides of the filter elements
- As the level of contamination increases, the differential pressure between the dirty and the clean side of the filter increases
- When the pressure drop reaches the pre-set trigger point, back-flushing starts automatically

INITIATION OF AUTOMATIC BACK-FLUSHING

- When the triggering differential pressure is exceeded
- By means of set timer function
- By pressing the “TEST” button

PROCEDURE FOR AUTOMATIC BACK-FLUSHING – BACK-FLUSHING CYCLE

EPT **Electro-pneumatic cyclic control**
The electrically powered gear motor rotates the back-flush arm below the filter element or elements to be cleaned and stops. The back-flushing valve is opened by a pneumatically operated rotor drive and the filter element or elements are cleaned. The pressure drop between the filtrate side and back-flush line flushes a small amount of the filtrate back through the contaminated filter elements. The contaminant particles deposited on the inside of the filter elements are detached and carried away via the back-flush arm into the back-flush line. After the “back-flush time per filter element” has elapsed, the back-flushing valve is closed. The gear motor now rotates the back-flush arm further to the next filter element(s) to be cleaned. The back-flushing valve is opened once again and the filter element or elements are back-flushed. A complete back-flushing cycle is terminated once all filter elements have been cleaned.

PTZ **Pneumatic cyclic control with timer function**
Like EPT, but with purely pneumatic components including the possibility of maximum filtration time, independent of differential pressure, to be set between the two back-flushing cycles. The controller of the back-flushing filter automatically initiates back-flushing when the maximum filtration time without back-flushing is exceeded – timer function.

EU **Electrical circulation control**
The electrically operated back-flushing valve opens. The gear motor rotates the back-flush arm continuously as it passes underneath the filter elements to be cleaned. The pressure drop between the filtrate side and back-flush line flushes a small amount of the filtrate back through the contaminated filter elements. The contaminant particles deposited on the inside of the filter elements are detached and carried away via the back-flush arm into the back-flush line. When the back-flush arm reaches its starting position, the gear motor stops and the electric back-flushing valve closes automatically.
The number of cycles can be preset via the controller.

EPU **Electro-pneumatic circulation control**
Like EU, but with the back-flush unit operated pneumatically.

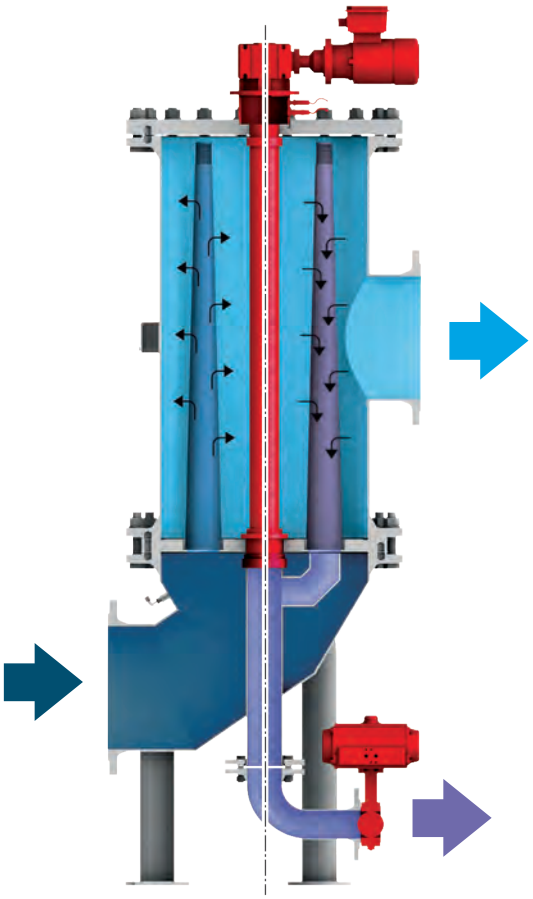

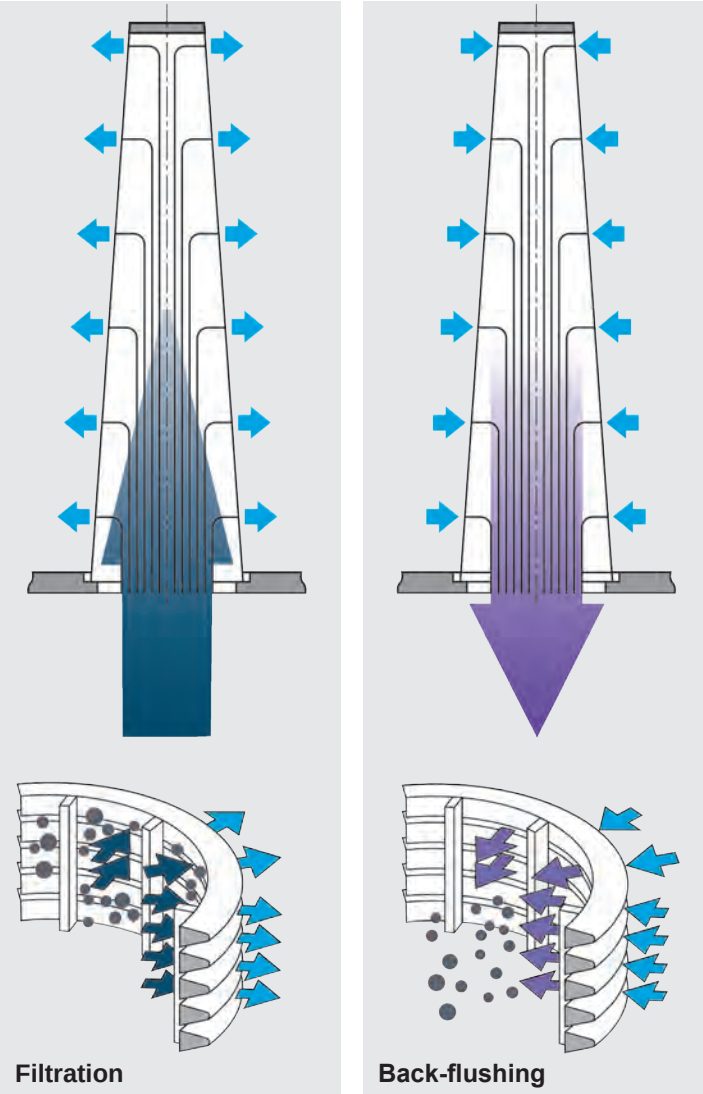

3. SPECIAL FEATURES

FILTER ELEMENT TECHNOLOGY

Conical filter elements
Robust wedge wire or SuperMesh wire mesh filter elements made of stainless steel are used in the HYDAC AutoFilt® RF3 automatic back-flushing filter. The conical shape of the filter elements provides maximum efficiency during filtration and optimum effectiveness during back-flushing.

SuperFlush coating technology
For waste-water treatment applications, the filter elements can also be given a special non-stick coating (SuperFlush).

Advantages of a SuperFlush coating:

- Unique coating technology
- Minimises adhesive particles adhering to the filter element surface
- Reduces biofouling
- Increases the interval between two back-flushing cycles
- Increases effectiveness

FLOW-OPTIMISED DESIGN

The particularly good flow characteristics allow the filter to be compact whilst achieving high filtration performance with low pressure drop.

ISOKINETIC FILTRATION AND BACK-FLUSHING

The conical shape and configuration of the filter elements allow consistent flow, resulting in a low pressure drop and complete cleaning of the filter elements.

Advantages:

- Fewer back-flushing cycles
- Smaller back-flush volumes
- Lower pressure difference (Δp)

PULSE-AIDED BACK-FLUSHING

For the EPT and PTZ controller types, rapid opening of the pneumatic back-flushing valve generates a pressure surge (clock pulse) in the filter element openings, and supplements the cleaning effect of the back-flushing process.

SMALL BACK-FLUSH VOLUMES DUE TO CYCLIC CONTROL

For the EPT and PTZ controller types, the back-flushing valve opens and closes for each filter element.

READY-TO-OPERATE UNIT

All components (controller, back-flushing valve, gear motor) are connected to the filter ready for operation. Once the pipework has been connected, all that is required is for the auxiliary power supply to be applied.

VARIABLE HOUSING CONFIGURATION

The inlet and outlet flanges and the back-flush line can be arranged in various positions in relation to one another. This makes it possible to integrate the filter easily into any system geometry (see point 1. General).

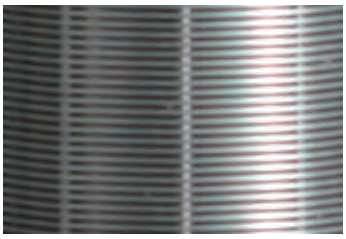

Wedge wire

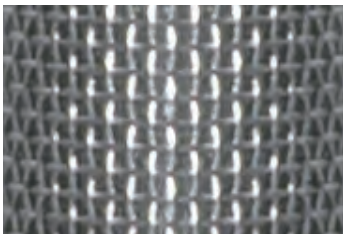

SuperMesh –
Triple-layer sintered wire mesh

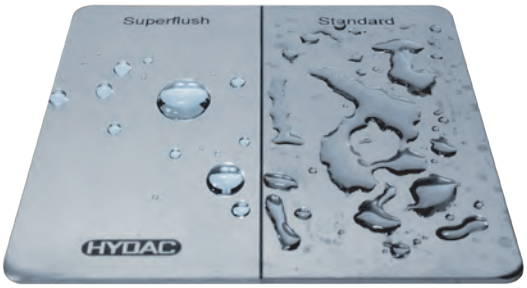

With SuperFlush / without SuperFlush
Coating technology for filter elements

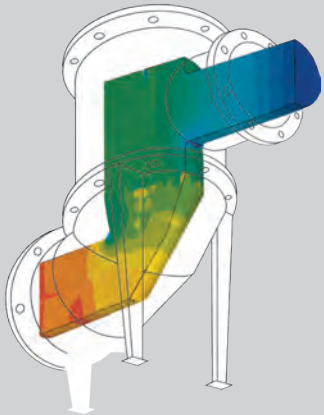

Flow-optimised design

Filter elements:
cylindrical vs. conical

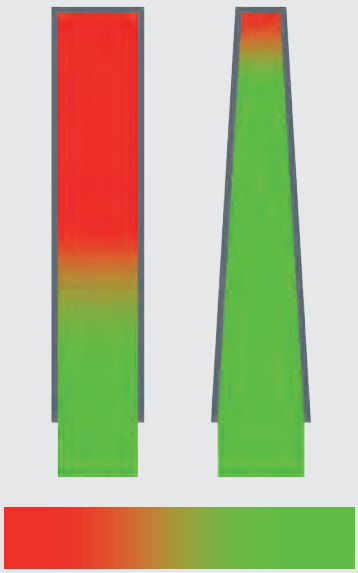

Efficiency of back-flushing

3. SPECIAL FEATURES

FILTER CONTROL

AUTOFILT® CONTROL UNIT ACU

The clear design of the touch screen gives the user an overview of the filter's current operating status at all times. The symbols used in the display are self-explanatory, based on common international standards and colour codes. The controller is designed to ensure open connectivity (optional) to all customer interfaces.

Advantages of the AutoFilt® Control Unit:

- Intuitive menu navigation via touch screen
- Optional open connectivity to all commonly used customer interfaces (Ethernet, USB, etc.)
- Highly precise pressure measurement using HYDAC HDA pressure transmitter
- Various menu languages to choose from
- Always up-to-date with simple software updates
- Additional differential pressure gauge available as an option

Customer signals on the terminal strip:

- Input (not potential-free, 24 VDC)
  - Filter remote control
- Outputs (potential-free)
  - Back-flushing active
  - General errors (power interruption, power failure, cable breakage, etc.)
  - Differential pressure (4 – 20 mA signal)

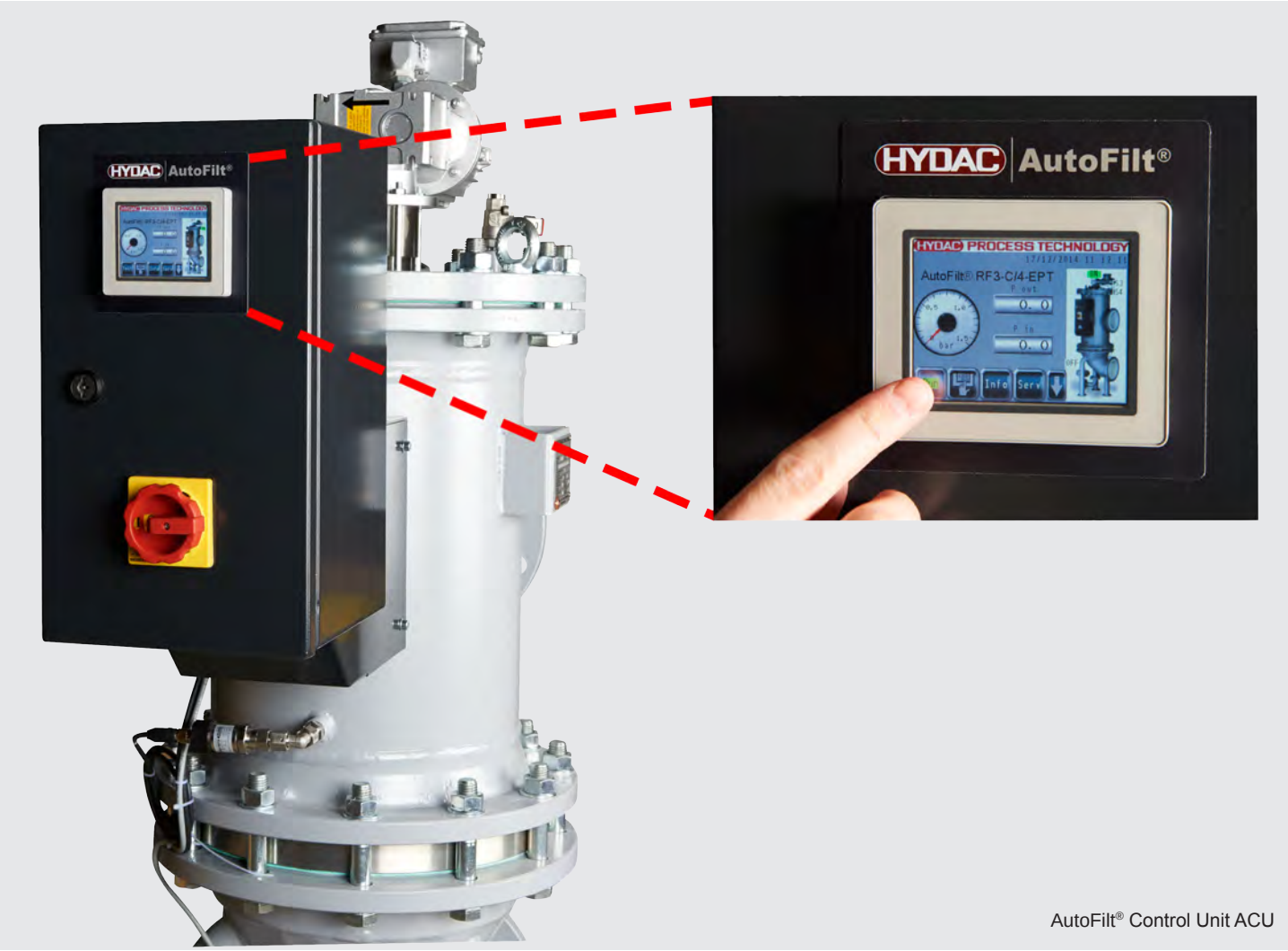

AutoFilt® Control Unit ACU

4. FILTER CALCULATION*

CHECKLIST FOR FILTER CALCULATION

STEP 1: CHECKING THE PREREQUISITES

- It is crucial when operating the AutoFilt® RF3 that there is a pressure differential between the back-flush line and the filter outlet of at least 1.5 bar
  (see circuit diagram on the following page)
- Application data is determined using filter questionnaires
- The flow velocity of 4 m/s at the flange inlet should not be exceeded
- The maximum permissible operating temperature for AutoFilt® RF3 (E1 / E2 stainless steel) made of stainless steel is 90°C
- The maximum permissible operating temperature for AutoFilt® RF3 with an inner coating (NP / NM) is 60°C
- The filter must be set up in a frost-free environment
- Our Head Office must be consulted for ambient temperatures below 0°C

STEP 2: FILTER SIZING

- Sizing based on the calculation table
- The flow rate curves apply to filtration ratings ≥ 100 µm
- The initial pressure difference (Δp) when the filter is clean should not exceed 0.2 bar
- AutoFilt® RF3 used with low particulate loading
  → Sizing Δp 0.1 to 0.2 bar
- AutoFilt® RF3 used with high particulate loading
  → Sizing Δp < 0.1 bar

STEP 3: DETERMINING THE FILTRATION RATING

- **As a basic rule:**
  as coarse as possible – as fine as necessary!
- For filtration ratings < 100 µm, the filter pressure drop increases by roughly 30% for all sizes
- For filtration ratings < 100 µm, the maximum flow rates reduce by 30%

STEP 4: CHECKING THE PARTICULATE LOADING

- Rule of thumb: The maximum solid particle content up to 300 mg/l depends on the particle distribution and the contamination type – for values outside the specified range, please contact the Head Office
- Note fluctuations in the dirt load
  (e.g. seasonal fluctuations in river water)

CALCULATION TABLES

The values given below are the minimum and maximum possible flow rates for the different sizes. For values outside these ranges, please contact our Head Office.

OPERATING MEDIUM – WATER

Size	Flow range [m³/h]
The flow ranges given apply to filtration ratings ≥ 100 µm	
C	5 – 28
0	25 – 113
1	90 – 254
2	200 – 450
2.5	400 – 600
3	550 – 860
4	810 – 1700
5	1500 – 2450
6	2000 – 3600
7	3000 – 5000
8	4500 – 7500

OPERATING MEDIUM – EMULSION (CUTTING FLUIDS, WASHING FLUIDS)

Size	Flow range [m³/h]
The flow ranges given apply to filtration ratings ≥ 100 µm	
C	5 – 15
0	10 – 60
1	40 – 100
2	90 – 200
2.5	100 – 350
3	150 – 450
4	200 – 650
5	350 – 950
6	700 – 1500
7	1000 – 1700
8	1300 – 3000

- Valid for emulsions and oils up to a viscosity of 15 mm²/s
- Our Head Office must be consulted for applications involving grey cast iron machining, grinding, honing and fluids with a viscosity above 15 mm²/s
- For filtration ratings < 100 µm, the flow rates reduce by 30%.

* Please contact our Head Office if you have any queries regarding the filter calculation.

PRESSURE DROP CURVE

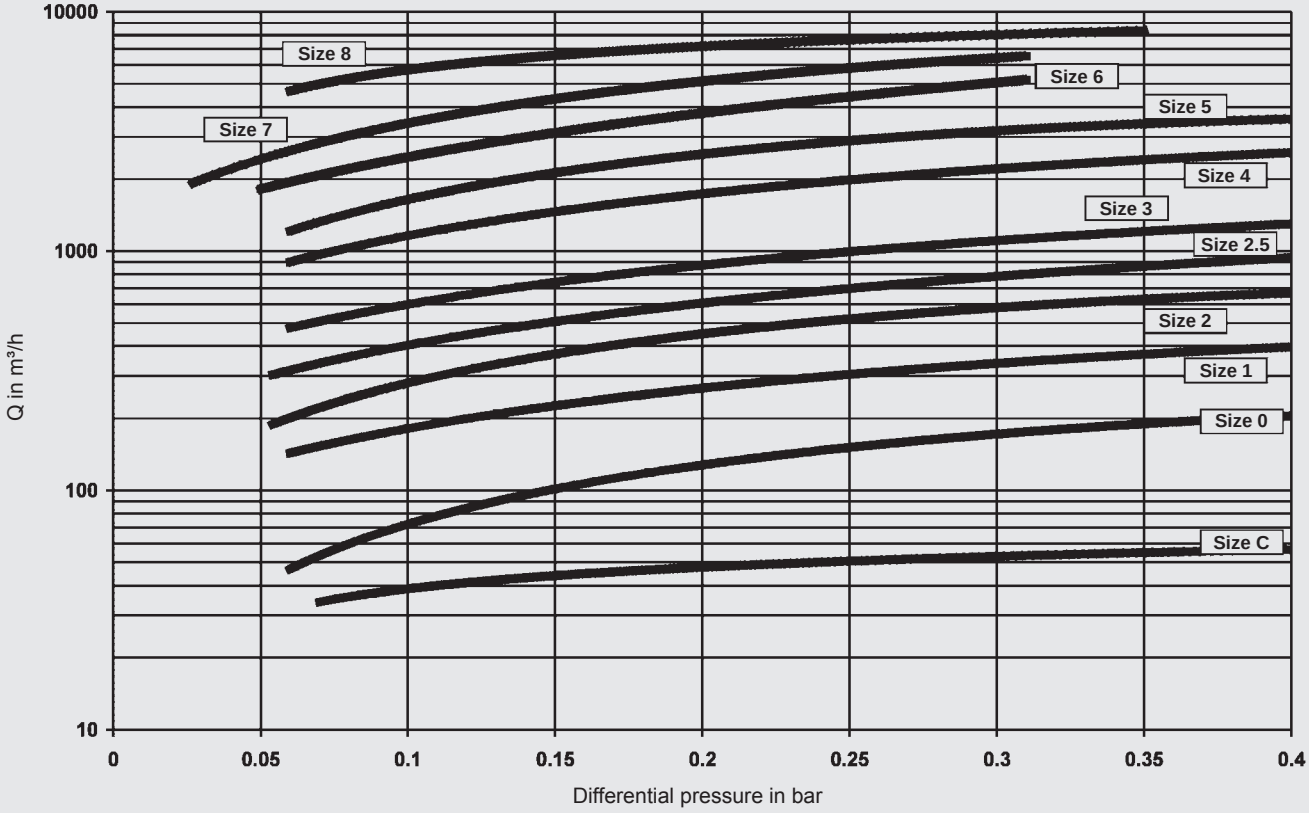

Caution

The pressure drop curves apply to filtration ratings from 100 to 3000 µm.
For wedge wire and SuperMesh filter elements < 100 µm, the pressure drop increases by roughly 30%.

CIRCUIT DIAGRAM

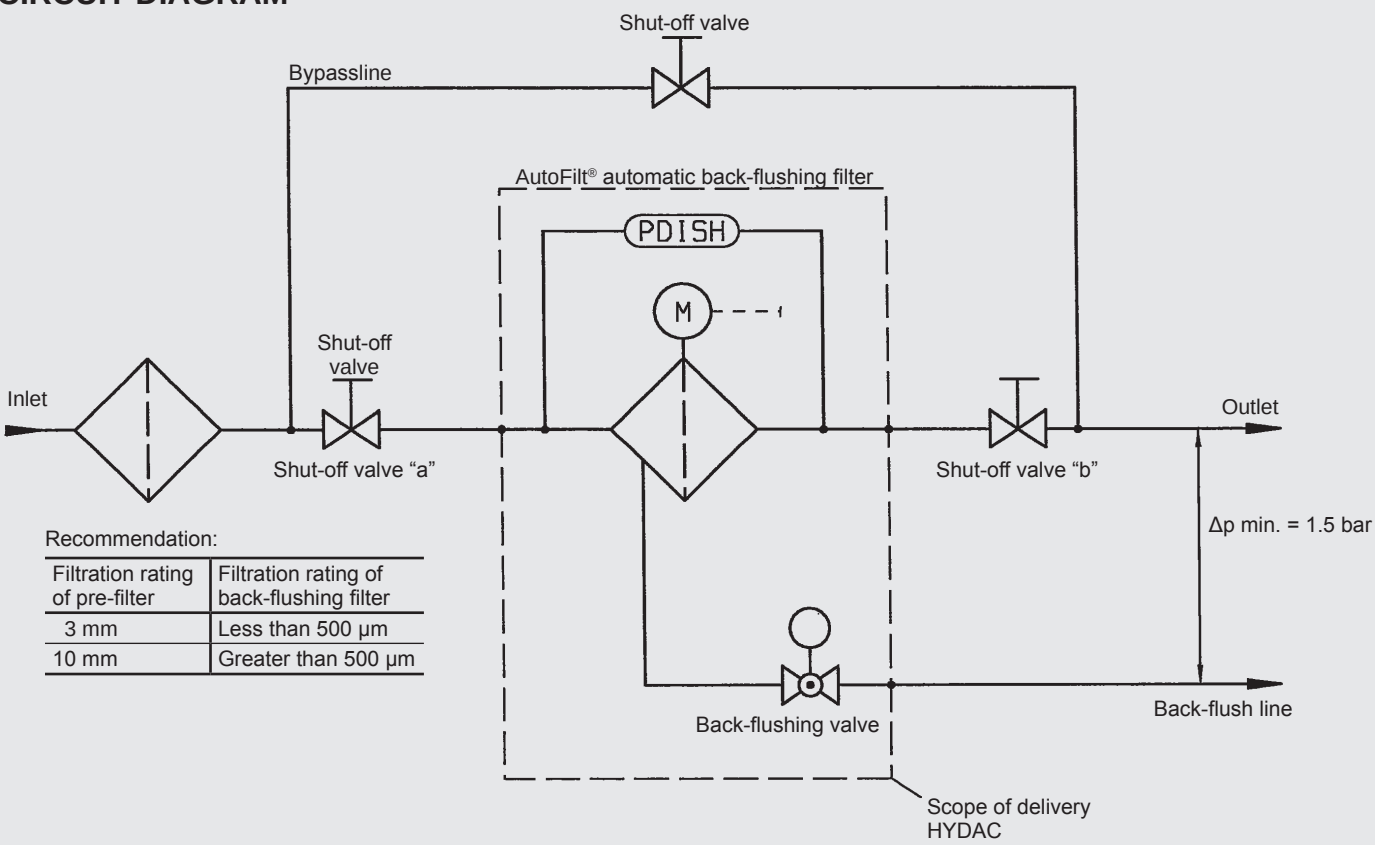

Recommendation:

Filtration rating of pre-filter	Filtration rating of back-flushing filter
3 mm	Less than 500 µm
10 mm	Greater than 500 µm

Caution

It is crucial when operating the AutoFilt® RF3 that there is a pressure differential between the back-flush line and the filter outlet of at least 1.5 bar.

5. FILTER CONFIGURATION*

	Standard	Optional
Types of controller	• EPT • EU • EPU • PTZ • Manual • Without controller	• PLC • Filter interlocking for parallel operation • UL / CSA-approved components • Safe in tropical conditions • Open connectivity to all commonly used customer interfaces • Customised special solutions
Connection voltages	All connection voltages and frequencies commonly used around the world can be implemented (see model code)	
Electrical protection classes	IP55	Other IP protection classes
Explosion protection		ATEX according to Directive 2014/68/EU
Housing	Housing design and housing production according to AD2000 and, if required, to the Pressure Equipment Directive 97/23/EC.	ASME Code Design with or without ASME stamp
Flange connections	DIN EN flanges	• ASME • JIS
Flange positions	Variable filter inlet and filter outlet connection positions and back-flush line rotatable	
Housing materials	• Carbon steel • E1: stainless steel 1.4301, 1.4541 or similar (group 304/321) • E2: stainless steel 1.4571 or similar (group 316)	• Duplex • Superduplex • Various qualities of stainless steel • Various qualities of carbon steel
Materials of internal parts	• E1: stainless steel 1.4301, 1.4541 or similar (group 304/321) • E2: stainless steel 1.4571 or similar (group 316)	• Duplex • Superduplex • Various qualities of stainless steel
Materials of filter elements	• E2: stainless steel 1.4571 or similar (group 316)	• Duplex • Superduplex • Filter elements with SuperFlush coating • Filter elements with magnet separator technology
External corrosion protection	• 2-coat primer (not required for stainless steel housings) • Colour RAL 7040 (window grey)	• Multi-layer paintwork • Special paints for offshore applications • Special paints / coatings according to customer specifications
Internal corrosion protection	• 2-comp. epoxy coating • 2-comp. highly cross-linked polyurethane coating • Rubber lining	• Glass flake lining • Special paints / coatings according to customer specifications
Measurement of pressure difference	• Differential pressure gauge – aluminium pressure chamber • Differential pressure gauge – stainless steel pressure chamber • Differential pressure gauge – with stainless steel diaphragm seal • Differential pressure gauge – brass pressure chamber • HYDAC HDA 4700 stainless steel pressure transmitter • HYDAC HDA 4300 Duplex pressure transmitter	
Davit		• With davit • Davit for subsequent installation
Documentation	• Operating instructions • Declaration of incorporation according to the Machinery Directive 2006/42/EC • Brief start-up guide • Circuit diagram	• Acceptance test certificate 3.1 according to DIN EN 10204 for design, pressure and functional testing • Material inspection certificates according to EN 10204, 3.1 for pressure-bearing media-contacting housing parts • TR CU certificates • Approvals: third parties (TÜV, ABS, Lloyds, etc.) • Welding documentation e.g. WPS, PQR, etc. • Inspection plan

* Other versions and customised special solutions following consultation with our Head Office.

6. MODEL CODE

MODEL CODE FOR AutoFilt® RF3

RF3 - 2.5 N 2 S - A1 - NM E1 - N 5 - 1 - 0 - 3 / SKS1000 - So

Type
AutoFilt®

Filter size (standard connection size + standard pressure range)

C	= DN 50 (PN16) [1]	2	= DN 200 (PN10)	4	= DN 400 (PN6)	7	= DN 700 (PN6)
0	= DN 100 (PN10)	2.5	= DN 250 (PN10)	5	= DN 500 (PN6)	8	= DN 900 (PN6)
1	= DN 150 (PN10)	3	= DN 300 (PN10)	6	= DN 600 (PN6)		

Connection size

Size DIN ASME	A DN25 1"	B DN 40 1 1/2"	C DN 50 1 1/2"	D DN 65 2 1/2"	E DN 80 3"	F DN 100 4"	H DN 125 5"	K DN 150 6"	L DN 200 8"	M DN 250 10"	N DN 300 12"	P DN 350 14"	Q DN 400 16"	J DN 450 18"	R DN 500 20"	W DN 550 22"	S DN 600 24"	T DN 700 28"	U DN 900 36"	V DN 1000 40"
C	–	✓	☑	✓	–	–	–	–	–	–	–	–	–	–	–	–	–	–	–	–
0	–	–	–	–	✓	☑	✓	–	–	–	–	–	–	–	–	–	–	–	–	–
1	–	–	–	–	–	–	✓	☑	✓	–	–	–	–	–	–	–	–	–	–	–
2	–	–	–	–	–	–	–	✓	☑	✓	–	–	–	–	–	–	–	–	–	–
2.5	–	–	–	–	–	–	–	–	✓	☑	✓	–	–	–	–	–	–	–	–	–
3	–	–	–	–	–	–	–	–	–	✓	☑	✓	✓	–	–	–	–	–	–	–
4	–	–	–	–	–	–	–	–	–	–	–	✓	☑	✓	✓	–	–	–	–	–
5	–	–	–	–	–	–	–	–	–	–	–	–	✓	✓	☑	✓	✓	–	–	–
6	–	–	–	–	–	–	–	–	–	–	–	–	–	–	✓	✓	☑	✓	–	–
7	–	–	–	–	–	–	–	–	–	–	–	–	–	–	–	–	✓	☑	✓	–
8	–	–	–	–	–	–	–	–	–	–	–	–	–	–	–	–	–	✓	☑	✓

☑ = Standard connection size (connection size added only if it deviates from the standard ☑)
✓ = Optional connection size

Pressure ranges

Size	1 (PN 6)	2 (PN 10)	3 (PN 16)	4 (PN 25)	5 (PN 40)	6 (PN 63)	7 (PN 100)
C	◇	◇	☑	✓	✓	◇	◇
0	◇	☑	☑[1]	✓	✓	◇	◇
1	◇	☑	✓	✓	✓	◇	◇
2	◇	☑	✓	✓	✓	◇	◇
2.5	◇	☑	✓	✓	◇	◇	◇
3	◇	☑	✓	✓	◇	◇	◇
4	☑	✓	✓	✓	◇	◇	◇
5	☑	✓	✓	✓	◇	◇	◇
6	☑	✓	✓	◇	◇	◇	◇
7	☑	✓	✓	◇	◇	◇	◇
8	☑	✓	◇	◇	◇	◇	◇

☑ = Standard pressure range
✓ = Optional pressure range
◇ = Pressure range on request

[1] 16 bar for stainless steel

Design code
S = HYDAC Standard
A = ASME VIII Div. 1 Calculation, materials and manufacture without stamp
U = ASME VIII Div. 1 with stamp
E = EN 13445

Type of controller / connection voltage
A = Electro-pneumatic cyclic control
C = Electro-pneumatic circulation control
B = Electric circulation control
D = Pneumatic cyclic control with timer function
M = Manual
0 = Without controller, all consumers on terminal strip:
Controllers A and C (EPT and EPU): gear motor voltage 3 x 380 – 400 V 50 Hz / 3 x 440 – 480 V 60 Hz, inductive proximity switch, HDA and 24 V DC solenoid valve
Controller B (EU): Gear motor voltage 3 x 380 – 400 V 50 Hz / 3 x 440 – 480 V 60 Hz, inductive proximity switch, HDA and 24 V DC solenoid valve, back-flushing valve drive 1 x 230 V / N / PE 50 – 60 Hz

1	= 3 x 400 V / N / PE 50 Hz	6	= 3 x 415 V / X / PE 50 Hz	B	= 3 x 575 V / X / PE 60 Hz	G	= 3 x 415 V / N / PE 50 Hz
2	= 3 x 400 V / X / PE 50 Hz	7	= 3 x 415 V / N / PE 60 Hz	C	= 3 x 690 V / X / PE 50 Hz	H	= 3 x 220 V / X / PE 60 Hz
3	= 3 x 500 V / X / PE 50 Hz	8	= 3 x 460 V / X / PE 60 Hz	D	= 1 x 230 V / N / PE 50 Hz	I	= 3 x 380 V / X / PE 50 Hz
4	= 3 x 230 V / N / PE 50 Hz	9	= 3 x 440 V / X / PE 60 Hz	E	= 1 x 230 V / N / PE 60 Hz	K	= 3 x 480 V / X / PE 60 Hz
5	= 3 x 230 V / X / PE 50 Hz	A	= 3 x 525 V / X / PE 50 Hz	F	= 1 x 115 V / N / PE 60 Hz		

Housing / corrosion protection material
N = Carbon steel, primed on the outside (RAL 7040)
NM = Carbon steel, primed on the outside (RAL 7040), inside 2-comp. epoxy coating
NP = Carbon steel, primed on the outside (RAL 7040), inside 2-comp highly cross-linked polyurethane coating
NG = Carbon steel, primed on the outside (RAL 7040), rubber lined inside
E1 = Stainless steel 1.4301, 1.4541 or similar (group 304/321)
E2 = Stainless steel 1.4571 or similar (group 316)
A = "A" also added in case of ANSI flange
J = "J" also added in case of JIS flange

Material for interior parts and filter elements
E1 = Stainless steel 1.4301, 1.4541 or similar (group 304/321), filter element stainless steel 1.4435 (group 316)
E2 = Stainless steel 1.4571 or similar (group 316), filter element stainless steel 1.4435 (group 316)
ES = Stainless steel 1.4571 or similar (group 316), filter element Superduplex (only wedge wire possible)
SE = Superduplex, filter element stainless steel 1.4435 (group 316)
DE = Duplex, filter element stainless steel 1.4435 (group 316)
DS = Duplex, filter element Superduplex (only wedge wire possible)
SS = Superduplex, filter element Superduplex (only wedge wire possible)

Material for back-flushing valve
0 = None
N = Flap: housing coated in spheroidal graphite iron, disc stainless steel, seal NBR (only up to pmax ≤ 16 bar!)
B = Flap: housing coated in spheroidal graphite iron, disc bronze, seal NBR (only up to pmax ≤ 16 bar!)
M = Flap: housing coated in spheroidal graphite iron, disc Superduplex, seal NBR (only up to pmax ≤ 16 bar!)
S = Ball valve: ball stainless steel, housing up to a nominal size of 50 mm carbon steel and from a nominal size of 50 mm coated in spheroidal graphite iron, ball seal PTFE (from pmax > 16 bar!)
E = Ball valve: ball stainless steel, housing stainless steel, ball seal PTFE (from pmax > 16 bar!)

Measurement of pressure difference
0 = None
1 = Differential pressure gauge – aluminium pressure chamber (only up to 25 bar!)
2 = Differential pressure gauge – stainless steel 1.4301 or similar (group 304/321) pressure chamber
3 = Differential pressure gauge – with stainless steel 1.4301 or similar (group 304/321) diaphragm seal
4 = Differential pressure gauge – brass pressure chamber
5 = HDA 4700 stainless steel V2A group
6 = HDA 4300 Duplex

Inlet and outlet flange position
1 = Filter outlet opposite / filter inlet (standard)
2 = Filter outlet offset by 90° clockwise to standard
3 = Filter outlet offset by 180° clockwise to standard
4 = Filter outlet offset by 270° clockwise to standard

Optional equipment / documentation (multiple entries possible)
0 = None
A = Certificate of conformance CoC
B = Acceptance test certificate 3.1 according to DIN EN 10204 for design, pressure and functional testing
C = Acceptance test certificate 3.1 according to DIN EN 10204 for design, pressure and functional testing incl. material inspection certificates according to EN 10204, 3.1 for pressure-bearing media-contacting housing parts
D = Material inspection certificates according to EN 10204, 3.1 for pressure-bearing media-contacting housing parts
E = Russian equipment pass incl. explanation letter for TRCU 032 / 2013; also declaration of conformity for TRCU 010 / 2011
F = End position switch position indicator for back-flushing valve (micro)
G = End position switch position indicator for back-flushing valve (inductive)
H = RAL 7040 top coat
I = Davit
K = Automatic vent valve
L = PE-UHMW clutch bushing with FKM O-rings
M = M12 x 1 male connector for electrical connections
N = Drinking water approval NSF / ANSI 61-G & 372
P = All seals FKM or FP2000
S = Seawater version
T = Marine / ship version

Change number
3 = The current version of the respective type is always delivered

Filter element set
KS = Conical wedge wire filter element (50 – 3000 µm)
KW = Conical SuperMesh filter elements (25/40/60 µm)
SKS = Conical wedge wire filter element with SuperFlush non-stick coating
SKW = Conical SuperMesh filter elements with SuperFlush non-stick coating

Special number
In case of special design
(Special number is assigned upon technical clarification in the Head Office)

7. DIMENSIONS

Size RF3-C to RF3-2

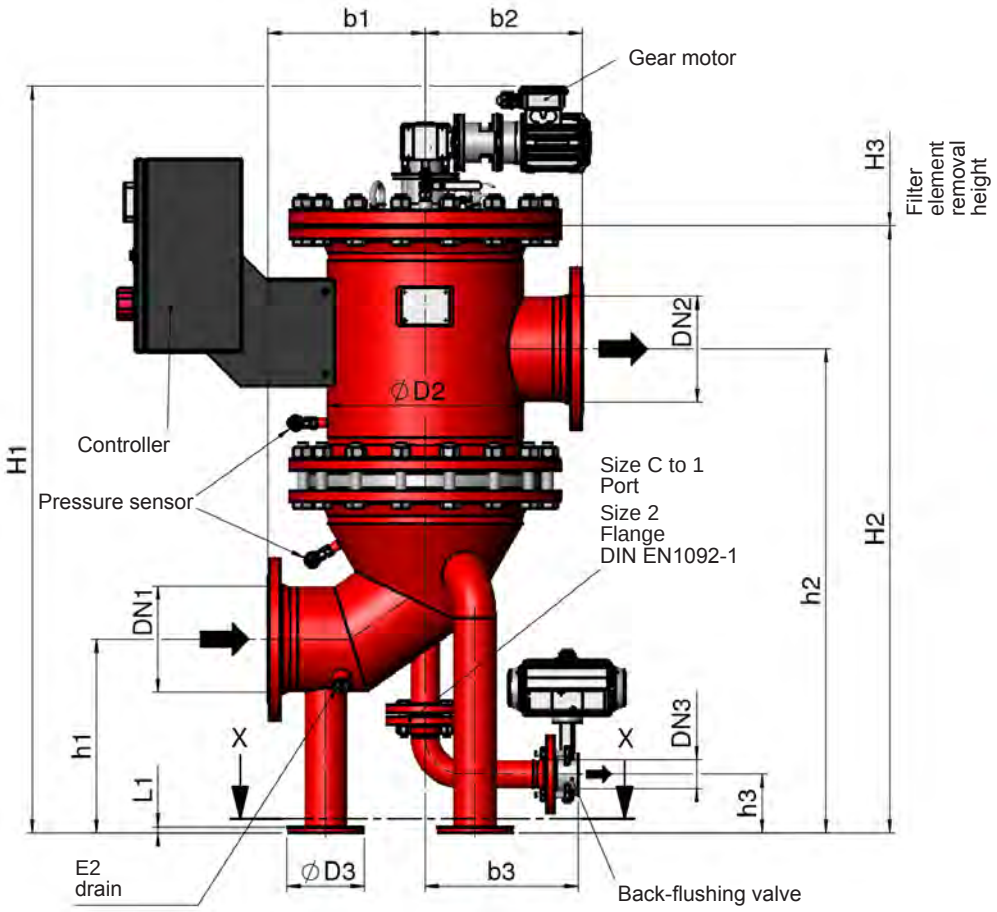

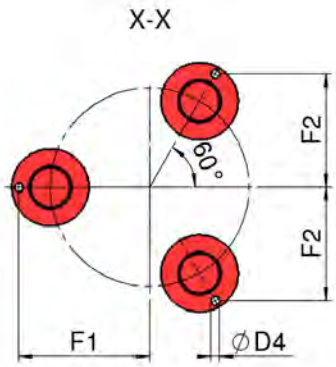

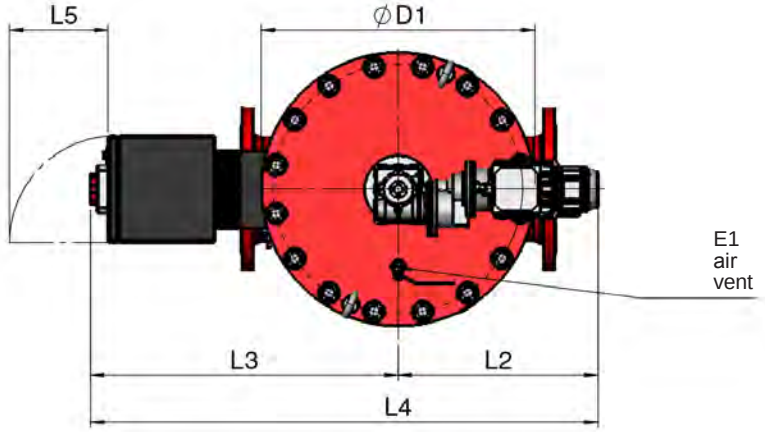

The dimensions quoted have ± 10 mm tolerances.
Subject to technical modifications.

Size	DN1	DN2	DN3	b1	b2	b3	h1	h2	h3	H1	H2	H3
RF3-C	50	50	25	200	200	255	220	579	101	967	709	550
RF3-0	100	100	25	200	200	258	250	740	100	1297	994	550
RF3-1	150	150	40	270	270	268	300	860	115	1425	1113	550
RF3-2	200	200	50	325	325	293	400	1000	122	1543	1255	550

Size	L1	L2	L3	L4	L5	D1	D2	D3	D4	E1	E2	F1	F2
RF3-C	8	342	646	988	200	340	219.1	100	12	G1/4	G1/2	155	135
RF3-0	8	342	676	1018	200	340	219.1	100	12	G1/4	G1/2	155	134
RF3-1	10	342	738	1080	200	445	323.9	120	15	G1/4	G3/4	210	186
RF3-2	12	342	783	1125	200	565	406.4	160	18	G1/4	G3/4	270	235

7. DIMENSIONS

Size RF3-2.5 to RF3-8

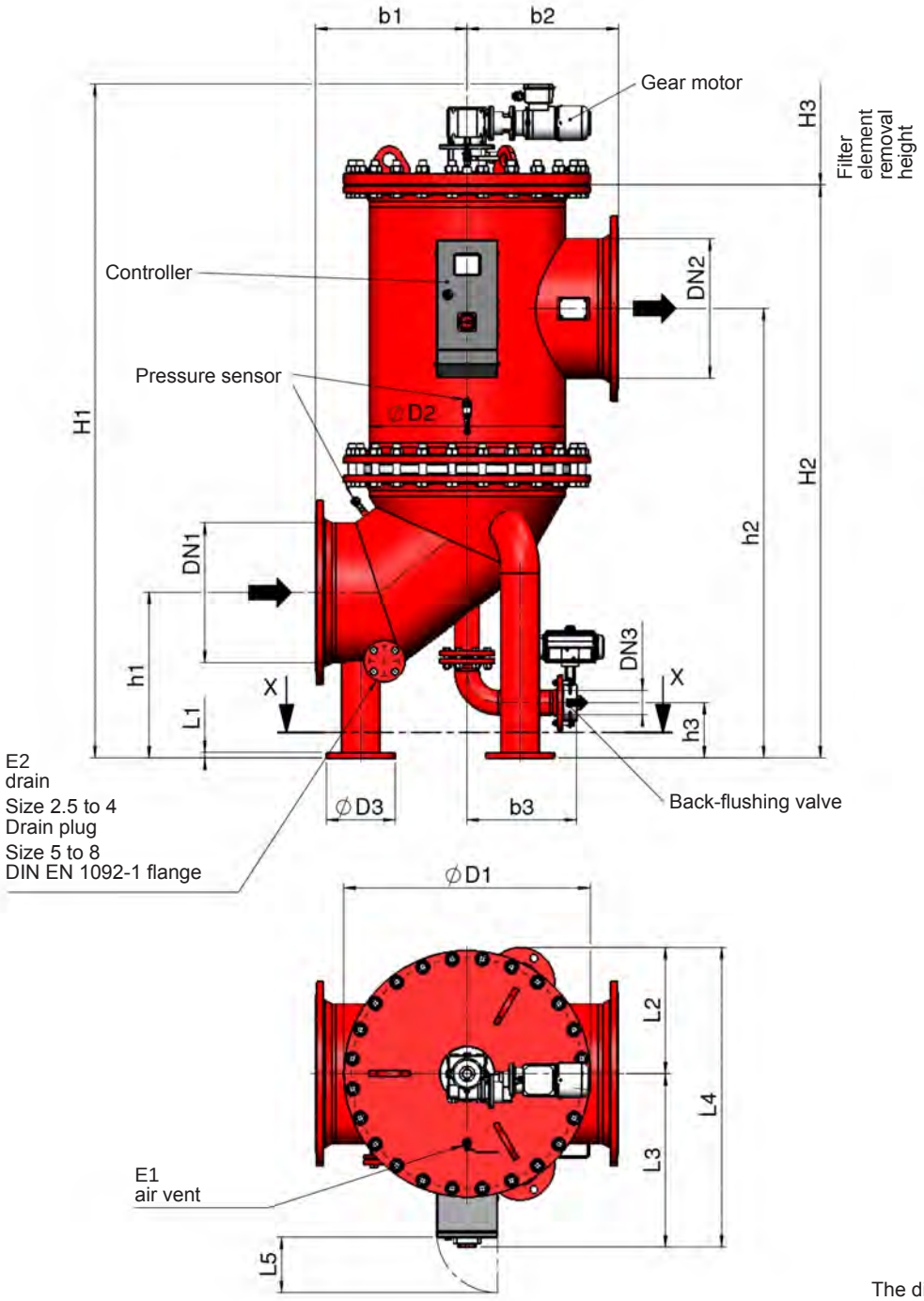

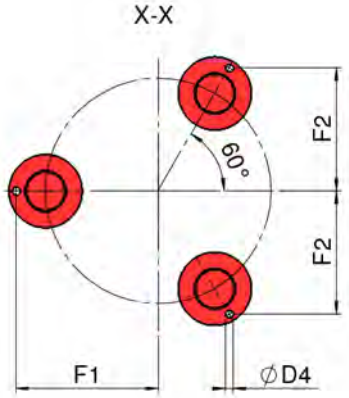

The dimensions quoted have ± 10 mm tolerances.
Subject to technical modifications.

Size	DN1	DN2	DN3	b1	b2	b3	h1	h2	h3	H1	H2	H3
RF3-2.5	250	250	50	325	325	317	400	1300	120	2048	1760	700
RF3-3	300	300	65	380	380	281	500	1380	155	2198	1888	700
RF3-4	400	400	80	450	450	297	600	1526	220	2338	2033	700
RF3-5	500	500	80	550	550	300	600	1630	200	2421	2080	700
RF3-6	600	600	100	625	625	315	675	1744	200	2618	2275	700
RF3-7	700	700	100	750	750	315	700	1806	201	2654	2311	700
RF3-8	900	900	150	950	950	560	1000	2545	229	3501	3183	700

Size	L1	L2	L3	L4	L5	D1	D2	D3	D4	E1	E2	F1	F2
RF3-2.5	12	283	630	913	200	565	406.4	160	18	G1/4	G3/4	270	235
RF3-3	12	335	685	1020	200	670	508	160	18	G1/4	G3/4	322	279
RF3-4	20	389	741	1130	200	780	610	200	22	G1/4	G3/4	375	358
RF3-5	20	459	794	1253	200	895	711	250	27	G1/4	DN40	485	420
RF3-6	20	563	901	1464	200	1115	914	300	30	G1/4	DN40	565	516
RF3-7	20	611	968	1579	200	1230	1016	300	30	G1/4	DN40	652	565
RF3-8	20	712	1000	1712	200	1405	1220	300	30	G1/4	DN40	719	623

NOTE

The information in this brochure relates to the operating conditions and applications described.
For applications and/or operating conditions not described, please contact the relevant technical department.
Subject to technical modifications.

HYDAC Process Technology GmbH
Am Wrangelflöz 1
D-66538 Neunkirchen
Tel.: +49 (0)6897 - 509-1241
Fax: +49 (0)6897 - 509-1278
Internet: www.hydac.com
E-mail: prozess-technik@hydac.com

EN 7.721.3/12.18